APPENDIX 5. Storage Documents

Document Ref.	Document Title	Appendix Page No.
PCCS-04-PTD-MP-4018-00001-001	MECHANICAL GA DRAWING CELLAR DECK	3
PCCS-04-PTD-MP-4018-00002-001	MECHANICAL GA DRAWING CELLAR DECK	4
PCCS-04-PTD-MP-4018-00003-001	MECHANICAL GA DRAWING MEZZ DECK	5
PCCS-04-PTD-MP-4018-00004-001	MECHANICAL GA DRAWING WEATHER DECK	6
PCCS-04-PTD-MP-4018-00005-001	PLOT PLAN CELLAR DECK EL +22000	7
PCCS-04-PTD-MP-4018-00006-001	PLOT PLAN MEZZ DECK EL +27150	8
PCCS-04-PTD-MP-4018-00007-001	PLOT PLAN WEATHER DECK EL +31500	9
PCCS-04-PTD-PX-2365-00000-001	ZG LEGEND SHEET 1	10
PCCS-04-PTD-PX-2365-00000-002	ZG LEGEND SHEET 2	11
PCCS-04-PTD-PX-2365-00000-003	ZG LEGEND SHEET 3	12
PCCS-04-PTD-PX-2365-00000-004	ZG LEGEND SHEET 4	13
PCCS-04-PTD-PX-2365-00000-005	ZG LEGEND SHEET 5	14
PCCS-04-PTD-PX-2365-01000-001	PROCESS ENGINEERING FLOW SCHEME CO_2 INJECTION MANIFOLD	15
PCCS-04-PTD-PX-2365-10000-001	PROCESS ENGINEERING FLOW SCHEME ZG TYPICAL CO_2 INJECTION WELLHEAD	16
PCCS-04-PTD-PX-2365-10000-002	PROCESS ENGINEERING FLOW SCHEME MONITORING WELLHEAD	17
PCCS-04-PTD-PX-2365-10000-003	UTILITY ENGINEERING FLOW SCHEME ZG HYDRAULIC POWER STATION	18
PCCS-04-PTD-PX-2365-20000-001	PROCESS ENGINEERING FLOW SCHEME ZG CO_2 IMPORT SYSTEM AND PIG RECEIVER	19
PCCS-04-PTD-PX-2365-20000-002	PROCESS ENGINEERING FLOW SCHEME CO_2 FILTERS	20
PCCS-04-PTD-PX-2365-50000-001	PROCESS ENGINEERING FLOW SCHEME WELL BLEED OFF MANIFOLD ARRANGEMENT	21
PCCS-04-PTD-PX-2365-50000-002	PROCESS ENGINEERING FLOW SCHEME ZG VENT KNOCKOUT DRUM V-50003, P-50003, A-50002	22
PCCS-04-PTD-PX-2365-59000-001	UTILITY ENGINEERING FLOW SCHEME ZG NITROGEN SYSTEM	23
PCCS-04-PTD-PX-2365-61000-001	UTILITY ENGINEERING FLOW SCHEME ZG DRAINS SYSTEM T-60010	24
PCCS-04-PTD-PX-2365-73000-001	UTILITY ENGINEERING FLOW SCHEME ZG CHEMICAL INJECTION SYSTEM FOR CCS PROJECT	25
PCCS-04-PTD-PX-2366-00001-001	PFS (*OFFSHORE PROCESS FLOW SCHEME GOLDENEYE FLOWS COMPOSITIONS AND OPERATING CONDITIONS*)	26
PCCS-04-PTD-PX-2366-01001-001	OFFSHORE PROCESS FLOW SCHEME SHELL GOLDENEYE TOPSIDES FACILITIES FOR CARBON STORAGE	27
PCCS-04-PTD-PX-2366-40001-001	OFFSHORE PROCESS FLOW SCHEME GOLDENEYE STORAGE GENERAL UTILITIES FOR CARBON STORAGE	28

PCCS-04-PTD-PX-2366-50001-001	OFFSHORE UTILITY FLOW SCHEME GOLDENEYE CO_2 VENTING SYSTEMS	29
PCCS-04-PTD-PX-2366-50002-001	UTILITY FLOW SCHEME GOLDENEYE WELLHEAD & LUBRICATOR VENT SYSTEM	30
PCCS-04-PTD-PX-6612-00001-001	GOLDENEYE PLATFORM MASTER EQUIPMENT LIST FOR PCCS	31
PCCS-04-PT-PX-2366-01001-001	PROCESS FLOW SCHEME, GOLDENEYE TOPSIDES FACILITIES FOR CARBON STORAGE	34

EQUIPMENT LIST

EQUIPMENT No.		(L) (W) (H)
HOLD	TUTU	1M x 0.75M x 2M HOLD
HOLD	ACCUMULATORS	2.5M x 1.5M x 2.5M HOLD
HOLD	DIESEL COALESCER	2.2M x 0.8M x 2M HOLD
ZG-S-20045A	C02 FILTER	
ZG-S-20045B	C02 FILTER	

LEGEND

LINE TYPE.	DESCRIPTION.
—— - ——	EXISTING
————	NEW

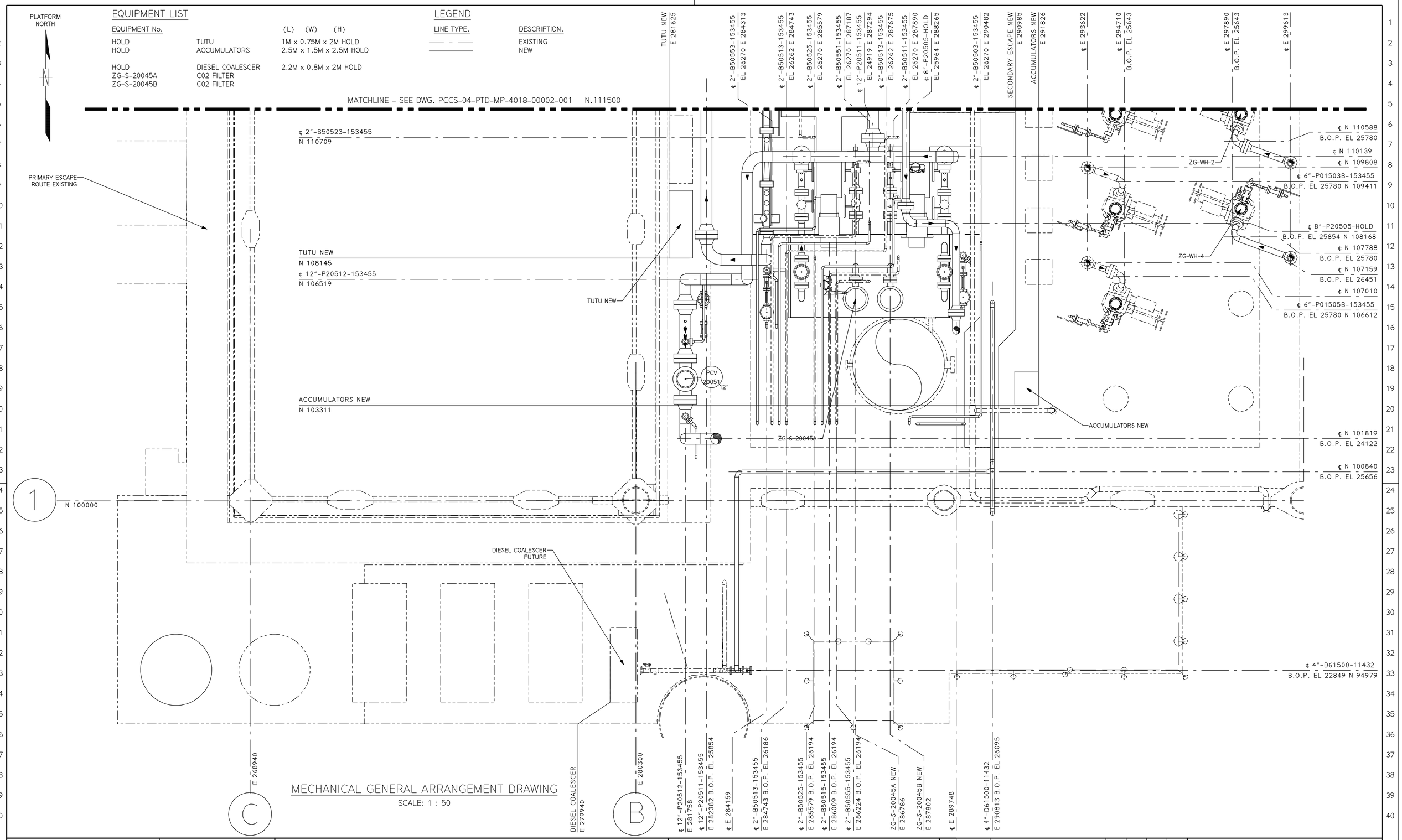

MECHANICAL GENERAL ARRANGEMENT DRAWING

SCALE: 1 : 50

REFERENCE DRAWINGS	DRAWING No.
MECHANICAL GENERAL ARRANGEMENT CELLAR DECK	PCCS-04-PTD-MP-4018-00002-001
MECHANICAL GENERAL ARRANGEMENT MEZZ DECK	PCCS-04-PTD-MP-4018-00003-001
MECHANICAL GENERAL ARRANGEMENT WEATHER DECK	PCCS-04-PTD-MP-4018-00004-001
PLAN CELLAR DECK	PCCS-04-PTD-MP-4018-00005-001
PLOT PLAN MEZZ DECK	PCCS-04-PTD-MP-4018-00006-001
PLOT PLAN WEATHER DECK	PCCS-04-PTD-MP-4018-00007-001

NOTES

1. C02 FILTER SIZE, BASED ON FEED DIMENSIONS.
2. C02 METERING IS CONSIDERED AS SKID MOUNTED.

REV	DATE	DESCRIPTION	DRAWN	CHK or TECH REP	DES ENG.	APP'D

PETERHEAD CCS

MECHANICAL GENERAL ARRANGEMENT DRAWING
CELLAR DECK

DRG No. PCCS-04-PTD-MP-4018-00001-001

REV. K01

ORIGINAL DRAWING SIZE A1

THIS DOCUMENT HAS AN ECCN OF EAR99

PLATFORM NORTH

EQUIPMENT LIST

EQUIPMENT No.	
ZG-S-73100A	METHANOL FILTER
ZG-S-73100B	METHANOL FILTER

LEGEND

LINE TYPE.	DESCRIPTION.
— - —	EXISTING
———	NEW
— - —	FUTURE

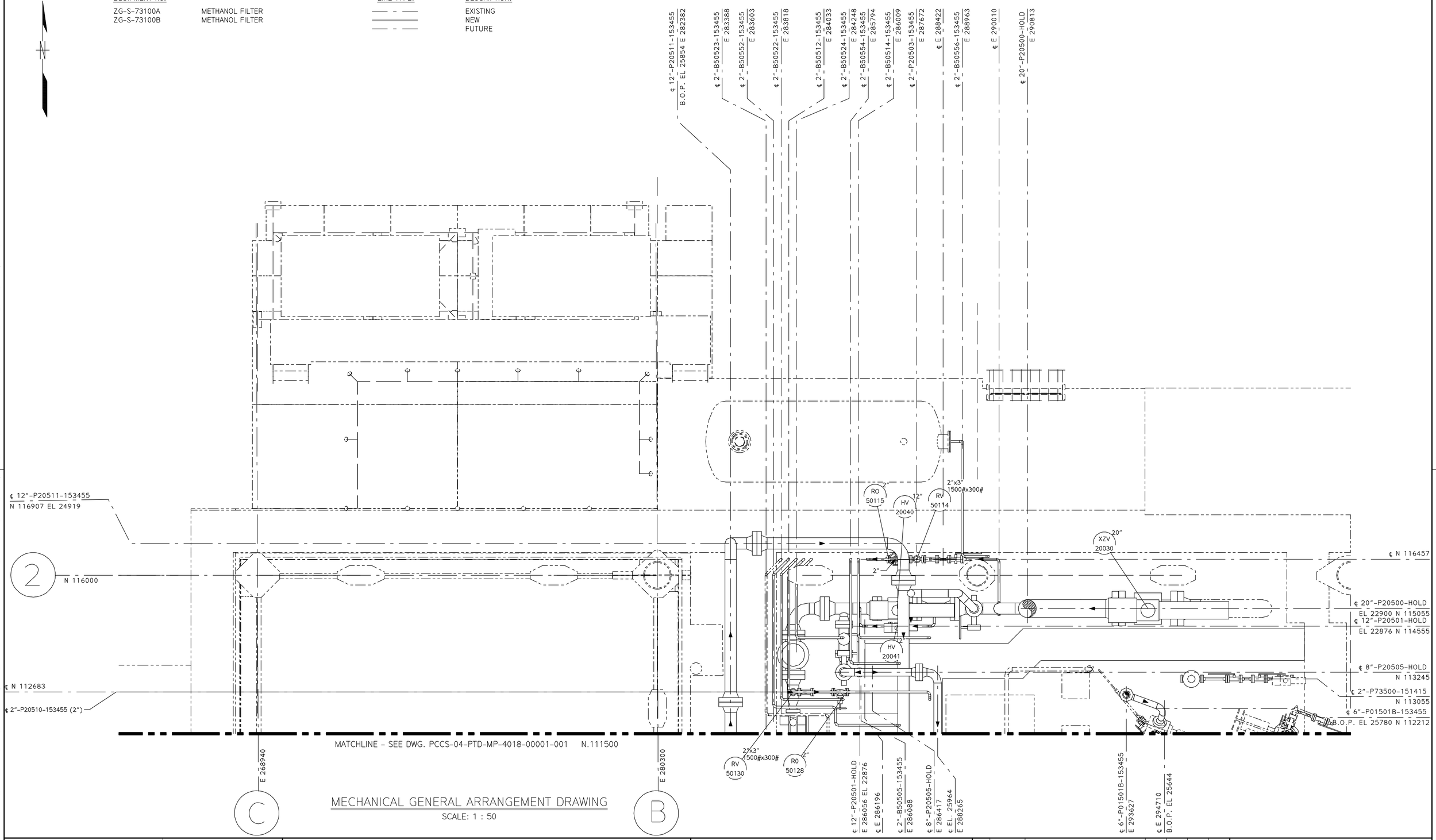

MECHANICAL GENERAL ARRANGEMENT DRAWING

SCALE: 1 : 50

REFERENCE DRAWINGS	DRAWING No.
MECHANICAL GENERAL ARRANGEMENT CELLAR DECK	PCCS-04-PTD-MP-4018-00001-001
MECHANICAL GENERAL ARRANGEMENT MEZZ DECK	PCCS-04-PTD-MP-4018-00003-001
MECHANICAL GENERAL ARRANGEMENT WEATHER DECK	PCCS-04-PTD-MP-4018-00004-001
PLAN CELLAR DECK	PCCS-04-PTD-MP-4018-00005-001
PLOT PLAN MEZZ DECK	PCCS-04-PTD-MP-4018-00006-001
PLOT PLAN WEATHER DECK	PCCS-04-PTD-MP-4018-00007-001

NOTES

1. METHANOL FILTER SIZE, BASED ON FEED DIMENSIONS.
2. CO2 METERING IS CONSIDERED AS SKID MOUNTED.

REV	DATE	DESCRIPTION	DRAWN	CHK or TECH REP	DES ENG.	APP'D

PETERHEAD CCS

MECHANICAL GERNERAL ARRANGEMENT DRAWING
CELLAR DECK

DRG No. PCCS-04-PTD-MP-4018-00002-001

REV. K01

ORIGINAL DRAWING SIZE A1

THIS DOCUMENT HAS AN ECCN OF EAR99

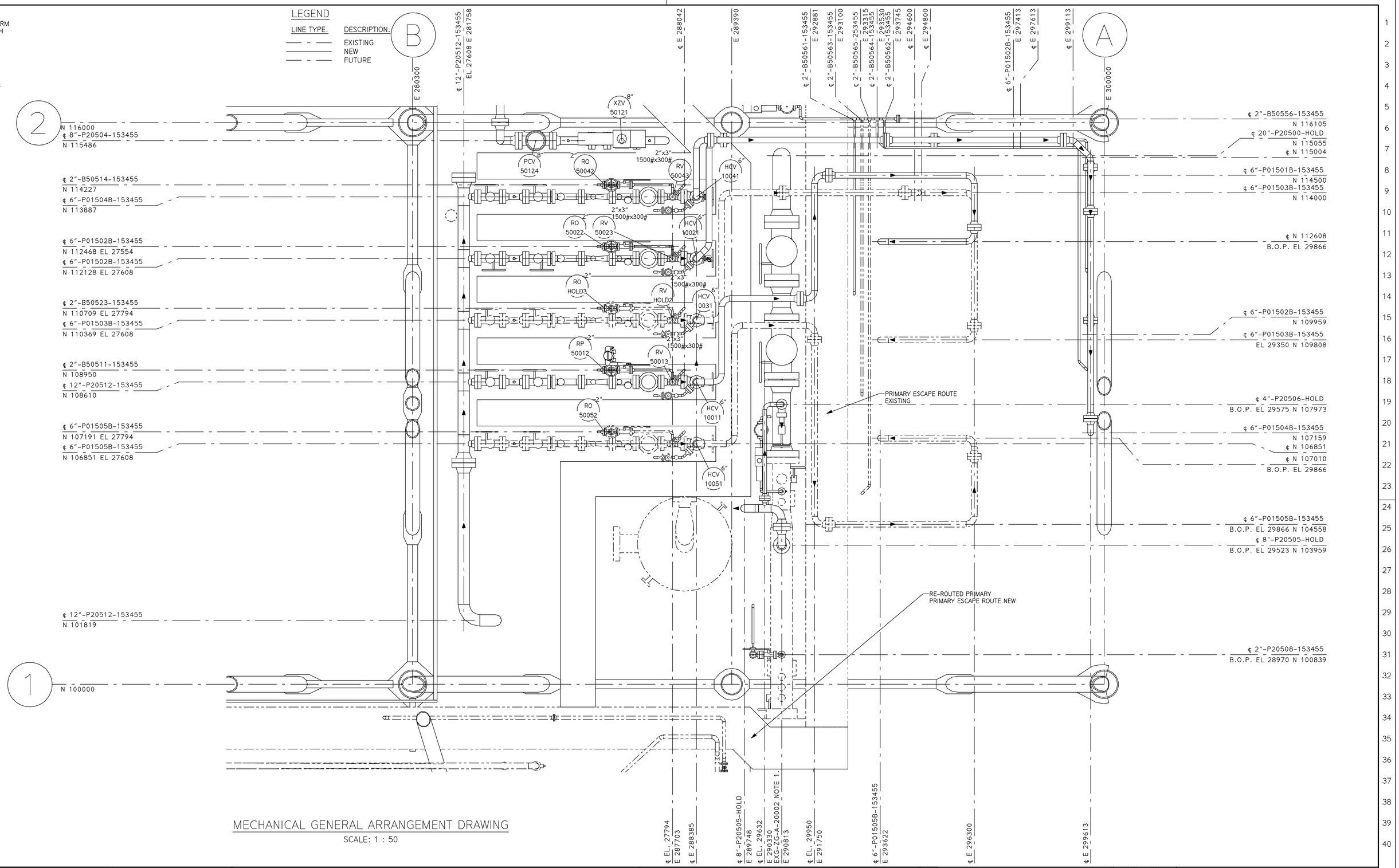

MECHANICAL GENERAL ARRANGEMENT DRAWING

SCALE: 1 : 50

REFERENCE DRAWINGS	DRAWING No.
MECHANICAL GENERAL ARRANGEMENT CELLAR DECK	PCCS-04-PTD-MP-4018-00001-001
MECHANICAL GENERAL ARRANGEMENT CELLAR DECK	PCCS-04-PTD-MP-4018-00002-001
MECHANICAL GENERAL ARRANGEMENT WEATHER DECK	PCCS-04-PTD-MP-4018-00004-001
PLOT PLAN CELLAR DECK	PCCS-04-PTD-MP-4018-00005-001
PLOT PLAN MEZZ DECK	PCCS-04-PTD-MP-4018-00006-001
PLOT PLAN WEATHER DECK	PCCS-04-PTD-MP-4018-00007-001

NOTES

1. THE FUNCTIONALITY OF THE EXISTING PIG TRAP CHANGED FROM LAUNCHER TO RECEIVER BY RELOCATING IT AXIALLY BY 1008mm IN SOUTH DIRECTION TO MAKE ROOM FOR NEW MINOR BARREL.

REV	DATE	DESCRIPTION	DRAWN	CHK or TECH REP	DES ENG.	APP'D

PETERHEAD CCS

MECHANICAL GERNERAL ARRANGEMENT DRAWING
MEZZ DECK

DRG No. PCCS-04-PTD-MP-4018-00003-001

REV. K01

ORIGINAL DRAWING SIZE A1

THIS DOCUMENT HAS AN ECCN OF EAR99

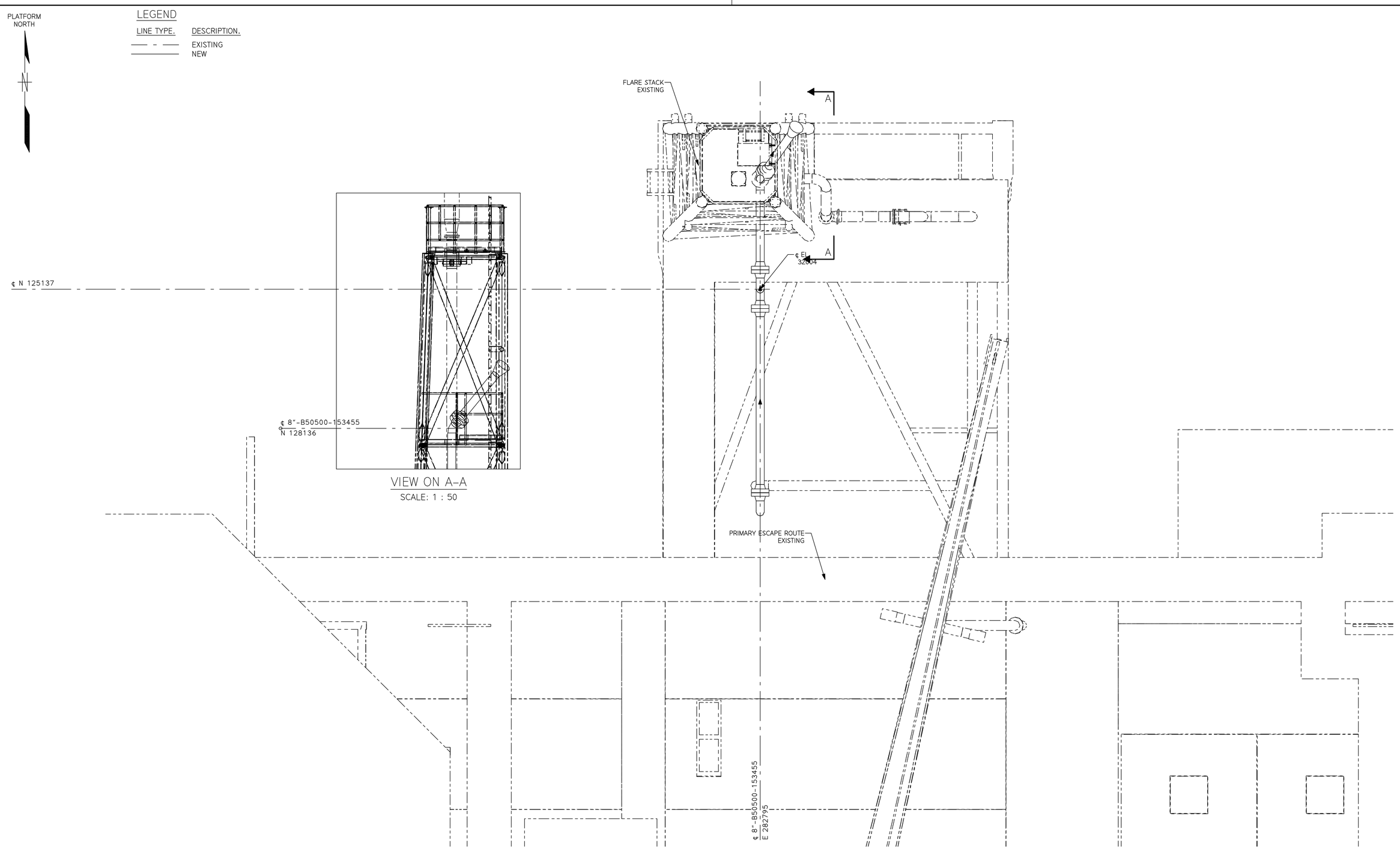

LEGEND

LINE TYPE.	DESCRIPTION.
— - —	EXISTING
———	NEW

VIEW ON A-A

SCALE: 1 : 50

MECHANICAL GENERAL ARRANGEMENT DRAWING

SCALE: 1 : 50

REFERENCE DRAWINGS	DRAWING No.
MECHANICAL GENERAL ARRANGEMENT CELLAR DECK	PCCS-04-PTD-MP-4018-00001-001
MECHANICAL GENERAL ARRANGEMENT CELLAR DECK	PCCS-04-PTD-MP-4018-00002-001
MECHANICAL GENERAL ARRANGEMENT MEZZ DECK	PCCS-04-PTD-MP-4018-00003-001
PLOT PLAN CELLAR DECK	PCCS-04-PTD-MP-4018-00005-001
PLOT PLAN MEZZ DECK	PCCS-04-PTD-MP-4018-00006-001
PLOT PLAN WEATHER DECK	PCCS-04-PTD-MP-4018-00007-001

NOTES

REV	DATE	DESCRIPTION	DRAWN	CHK or TECH REP	DES ENG.	APP'D

PETERHEAD CCS

MECHANICAL GERNERAL ARRANGEMENT DRAWING
WEATHER DECK

DRG No. PCCS-04-PTD-MP-4018-00004-001

REV. K01

ORIGINAL DRAWING SIZE A1

THIS DOCUMENT HAS AN ECCN OF EAR99

PLATFORM NORTH

EQUIPMENT LIST

EQUIPMENT No.		(L) (W) (H)
HOLD	TUTU	1M x 0.75M x 2M HOLD
HOLD	ACCUMULATORS	1M x 0.7M x 2.5M
HOLD	DIESEL COALESCER	2.2M x 0.8M x 2M FUTURE
ZG-S-20045A	CO2 FILTER	
ZG-S-20045B	CO2 FILTER	
ZG-S-73100	METHANOL FILTER	

LEGEND

LINE TYPE.	DESCRIPTION.
—— - ——	EXISTING
————	NEW
—— - ——	FUTURE

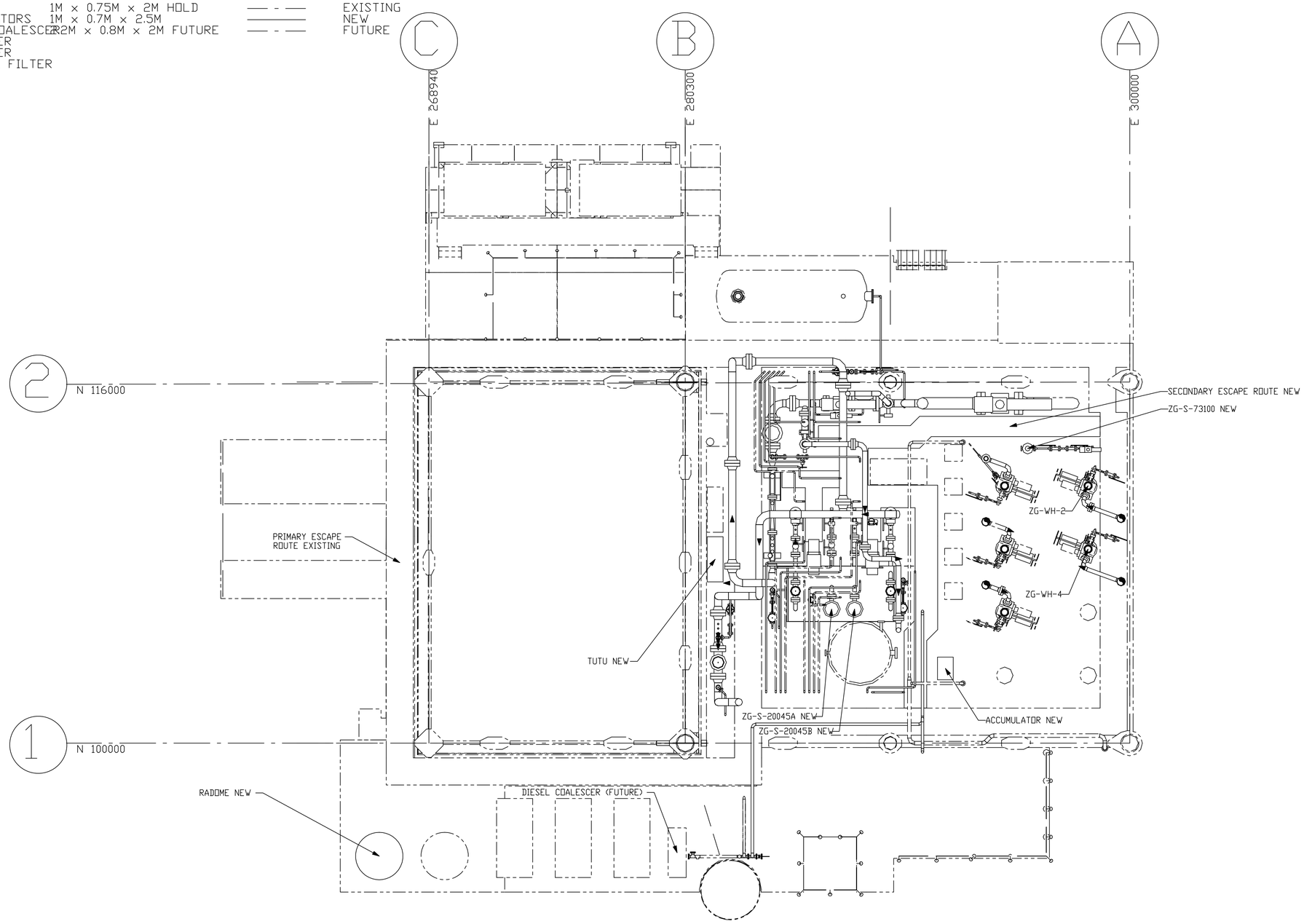

PLAN VIEW ON CELLAR DECK

SCALE: 1 : 100

REFERENCE DRAWINGS	DRAWING No.
MECHANICAL GENERAL ARRANGEMENT CELLAR DECK	PCCS-04-PTD-MP-4018-00001-001
MECHANICAL GENERAL ARRANGEMENT CELLAR DECK	PCCS-04-PTD-MP-4018-00002-001
MECHANICAL GENERAL ARRANGEMENT MEZZ DECK	PCCS-04-PTD-MP-4018-00003-001
MECHANICAL GENERAL ARRANGEMENT WEATHER DECK	PCCS-04-PTD-MP-4018-00004-001
PLOT PLAN MEZZ DECK	PCCS-04-PTD-MP-4018-00006-001
PLOT PLAN WEATHER DECK EXISTING	PCCS-04-PTD-MP-4018-00007-001

NOTES

1. CO2 & METHANOL FILTER SIZE, BASED ON FEED DIMENSIONS.
2. CO2 METERING IS CONSIDERED AS SKID MOUNTED.
3. 24 No. BREATHING APPARATUS SHALL BE LOCATED IN EXISTING TEMPORY REFUGE.

REV	DATE	DESCRIPTION	DRAWN	CHK or TECH REP	DES ENG.	APP'D

PETERHEAD CCS

PLOT PLAN CELLAR DECK
EL +22000

DRG No. PCCS-04-PTD-MP-4018-00005-001

REV. K01

ORIGINAL DRAWING SIZE A1

THIS DOCUMENT HAS AN ECCN OF EAR99

PLATFORM NORTH

N

LEGEND

LINE TYPE.	DESCRIPTION.
—— - ——	EXISTING
————	NEW
—— - ——	FUTURE

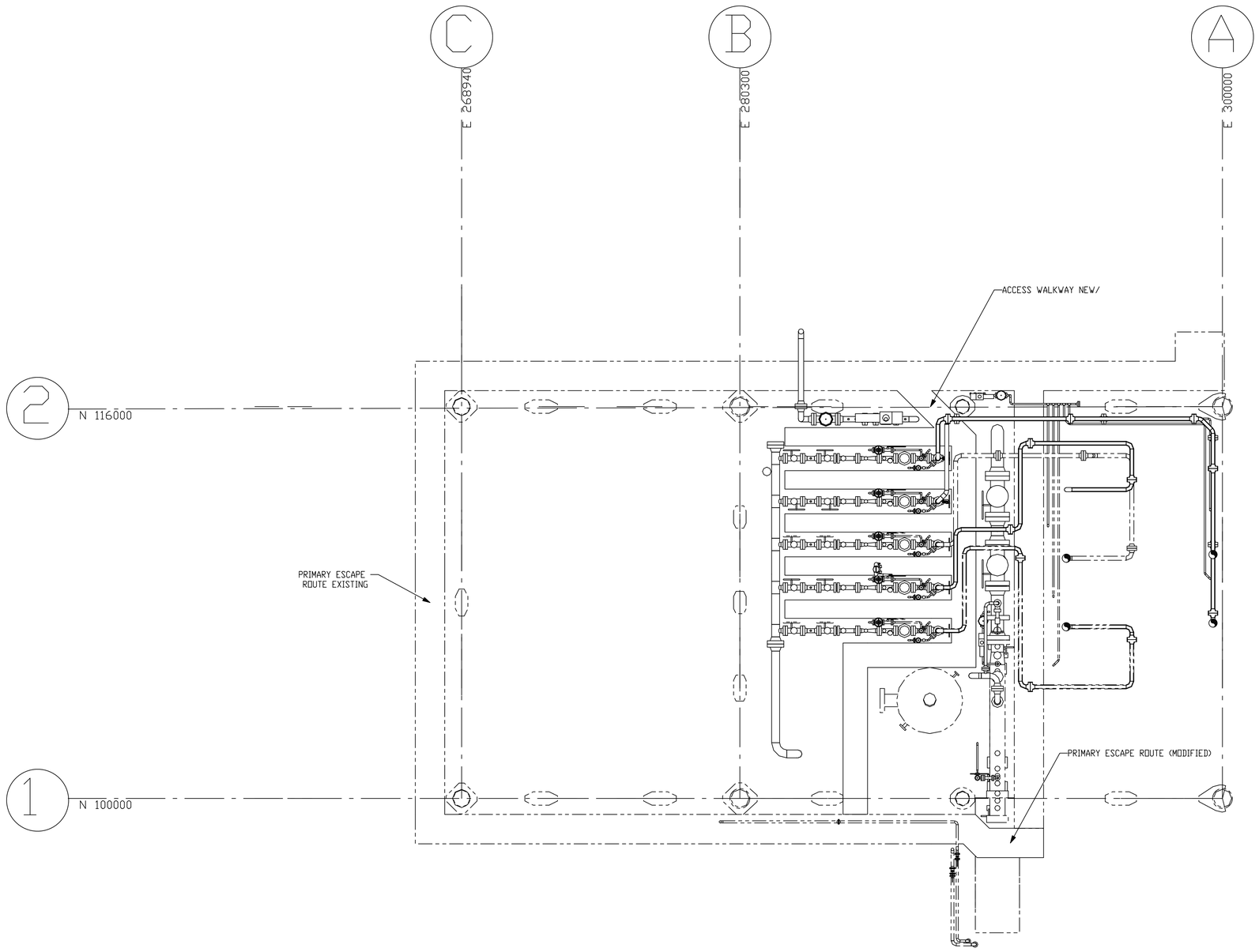

PLAN VIEW ON MEZZ DECK

SCALE: 1 : 100

REFERENCE DRAWINGS	DRAWING No.
MECHANICAL GENERAL ARRANGEMENT CELLAR DECK	PCCS-04-PTD-MP-4018-00001-001
MECHANICAL GENERAL ARRANGEMENT CELLAR DECK	PCCS-04-PTD-MP-4018-00002-001
MECHANICAL GENERAL ARRANGEMENT MEZZ DECK	PCCS-04-PTD-MP-4018-00003-001
MECHANICAL GENERAL ARRANGEMENT WEATHER DECK	PCCS-04-PTD-MP-4018-00004-001
PLOT PLAN CELLAR DECK	PCCS-04-PTD-MP-4018-00005-001
PLOT PLAN WEATHER DECK EXISTING	PCCS-04-PTD-MP-4018-00007-001

NOTES

1. THE EXISTING PIG LAUNCHER HAS MOVED SOUTH BY 1008mm TO ACCOMMODATE A NEW PUP PIECE TO FACILITATE THE CONVERSION OF EXISTING LAUNCHER INTO A RECEIVER.

REV	DATE	DESCRIPTION	DRAWN	CHK or TECH REP	DES ENG.	APP'D

PETERHEAD CCS

PLOT PLAN MEZZ DECK
EL +27150

DRG No. PCCS-04-PTD-MP-4018-00006-001

REV. K01

ORIGINAL DRAWING SIZE A1

THIS DOCUMENT HAS AN ECCN OF EAR99

PLATFORM NORTH

EQUIPMENT LIST

EQUIPMENT No.		(L) (W) (H)
HOLD	NITROGEN QUAD	2M x 1.3M x 1.8M HOLD
HOLD	ANTENNA	

LEGEND

LINE TYPE.	DESCRIPTION.
— - —	EXISTING
———	NEW

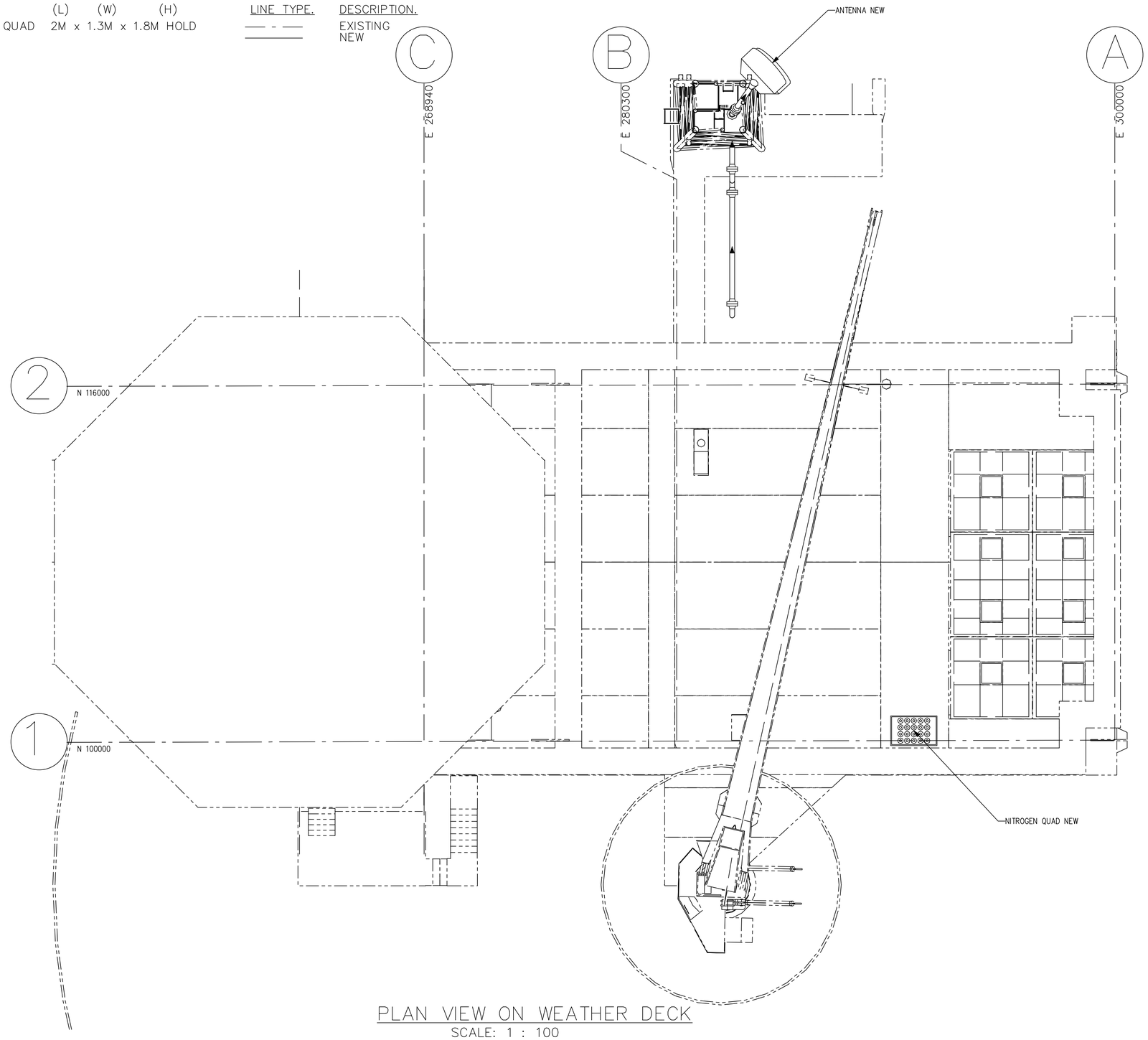

PLAN VIEW ON WEATHER DECK

SCALE: 1 : 100

REFERENCE DRAWINGS	DRAWING No.
MECHANICAL GENERAL ARRANGEMENT CELLAR DECK	PCCS-04-PTD-MP-4018-00001-001
MECHANICAL GENERAL ARRANGEMENT CELLAR DECK	PCCS-04-PTD-MP-4018-00002-001
MECHANICAL GENERAL ARRANGEMENT MEZZ DECK	PCCS-04-PTD-MP-4018-00003-001
MECHANICAL GENERAL ARRANGEMENT WEATHER DECK	PCCS-04-PTD-MP-4018-00004-001
PLOT PLAN CELLAR DECK	PCCS-04-PTD-MP-4018-00005-001
PLOT PLAN MEZZ DECK	PCCS-04-PTD-MP-4018-00006-001

NOTES

REV	DATE	DESCRIPTION	DRAWN	CHK or TECH REP	DES ENG.	APP'D

PETERHEAD CCS

PLOT PLAN WEATHER DECK
EL +31500

DRG No. PCCS-04-PTD-MP-4018-00007-001

REV. K01

ORIGINAL DRAWING SIZE A1

THIS DOCUMENT HAS AN ECCN OF EAR99

EQUIPMENT IDENTIFICATION LETTER CODES

1st LETTER		2nd LETTER
A	PACKAGED UNITS AND MISCELLANEOUS EQUIPMENT	
C	COLUMNS: TRAY COLUMNS PACKED COLUMNS ROTATING DISC CONTACTORS	CHAMBER
D	DRYING EQUIPMENT	DIESEL ENGINE
E	UNFIRED HEAT TRANSFER EQUIPMENT – HEAT EXCHANGERS – CONDENDERS – AIR–COOLED HEAT EXCHANGERS – REBOILERS	
F	FIRED FURNACES, HEATERS, STEAM BOILERS	
G	GENERATOR	GEARBOX
HPU	HYDRAULIC POWER UNIT	
J	JETS (EJECTORS, INJECTORS AND EDUCTORS)	
K	COMPRESSORS, BLOWERS, FANS	
M	MIXERS, STIRRERS, MIXING NOZZLES, BLENDERS, STEAM DESUPERHEATERS	
P	PUMPS (CENTRIFUGAL, RECIPROCATING, ROTARY)	ELECTRIC MOTOR
S	GRAVITY AND MECHANICAL SEPARATORS	
T	ATMOSPHERIC STORAGE TANKS, INTERCEPTORS, NEUTRALISING PITS	
V	VESSELS	TURBINE (STEAM OR GAS)
W	WEIGHING EQUIPMENT	
WH	WELLHEAD	
X	STATIONARY TRANSPORT EQUIPMENT	
Z	BULK LOADING ARMS	

FIREWATER PROTECTION SYMBOLS

- 4–WAY HYDRANT
- 2–WAY HYDRANT
- OSCILLATING MONITOR
- DVS — DELUGE VALVE

COLUMNS AND INTERNALS

VESSEL

- SWIRL DECK
- MIST MAT
- VANE PACK
- SCHOEPENTOETER (VANE TYPE)
- LIQUID SPRAY, PERFORATED PIPE
- HALF–OPEN PIPE DISTRIBUTOR
- TOTAL DRAW–OFF TRAY
- CHIMNEY
- PACKED SECTION
- REDISTRIBUTION, LIQUID, LIQUID
- REDISTRIBUTION, GAS/ LIQUID INJECTION
- BAFFLE WITH PARTITION PLATE
- VORTEX BREAKER
- PACKED COLUMN, BASIC SYMBOL
- 24 / 15 / 14 / 1 — ONLY WHERE SIGNIFICANT, AND NUMBERED FROM BOTTOM TO TOP)

MISCELLANEOUS EQUIPMENT

- PIG LAUNCHER/ RECEIVER
- EJECTOR/INJECTOR/ EDUCTOR
- SILENCER

TANKS

- OPEN TANK
- CONICAL ROOF TANK
- FLOATING ROOF TANK
- ATMOSPHERIC TANK

VESSEL

- VESSEL, BASIC SYMBOL
- SWAGED COLUMN (INSULATED)
- TRACED VESSEL
- HORIZONTAL VESSEL WITH DOME AND BOOT

MIXERS

- IN–LINE MIXER

HEAT–TRANSFER EQUIPMENT

- HEAT EXCHANGER/COOLER/ CONDENSOR, WITH FLOATING HEAD
- HEAT EXCHANGER/COOLER/ CONDENSOR, U–TUBE
- HEAT EXCHANGER/COOLER/ CONDENSOR, FIXED TUBE SHEET
- HEAT EXCHANGER / COOLER / CONDENSOR, WITH TWO PASS SHELL, U–TUBE / CONDENSOR, WITH TWO PASS SHELL, U–TUBE
- KETTLE–TYPE REBOILER, U–TUBE
- AIR–COOLED HEAT EXCHANGER, FORCED DRAUGHT AND LOUVRE SYSTEM (INDUCED DRAUGHT, FAN AT TOP)
- AIR–COOLED HEAT EXCHANGER, FORCED DRAUGHT, WITH AUTOMATIC–VARIABLE PITCH FANS (INDUCED DRAFT, FAN AT TOP)
- DOUBLE–PIPE HEAT EXCHANGER
- ELECTRIC HEATER (IN TANK)

SYMBOLS FOR USE ON PROCESS FLOW SCHEMES

- COOLING COIL, BASIC SYMBOL
- HEATING COIL, BASIC SYMBOL
- AIR COOLED HEAT EXCHANGER HEATING EXCHANGER
- HEATER, ELECTRIC (electric)
- KETTLE–TYPE REBOILER

PUMPS AND COMPRESSORS

- RC — RECIPROCATING COMPRESSOR, SINGLE STAGE
- RP — RECIPROCATING PUMP
- CENTRIFUGAL COMPRESSOR
- BLOWER OR FAN
- CENTRIFUGAL PUMP, BASIC SYMBOL
- M — CENTRIFUGAL PUMP (SUBMERGED SUCTION), ELECTRIC MOTOR DRIVEN
- M — ELECTRIC MOTOR
- GAS TURBINE

FURNACES

- FIRED HEATER

SEPARATORS AND FILTERS

- BASKET FILTER
- STRAINER OR FILTER

SPECIFIC NOTES

1. ALL ELEVATIONS AND DIMENSIONS OF EQUIPMENT AND PIPE ROUTING ARE RELATIVE ALTHOUGH NOT TO SCALE. EQUIPMENT SHALL BE SHOWN IN REALISTIC PROPORTIONS, WITH PUMPS AT THE BOTTOM AND AIRCOOLERS AT THE TOP OF THE PEFS. MAJOR EQUIPMENT SHALL BE SHOWN AT ONE LEVEL, eg. FURNACES, COLUMNS, etc. IF DIFFERENT LEVELS ARE REQUIRED THE ELEVATIONS SHALL BE STATED.
2. CONTINUATION FLAGS TO SHOW CONTINUATION DRAWING NUMBER TOGETHER WITH SERVICE, DESTINATION EQUIPMENT & TAG NUMBER.
3. EQUIPMENT DATA BLOCKS SHALL SHOW TAG NUMBER AND DESCRIPTION, WITH DESIGN AND OPERATING PRESSURE AND TEMPERATURES AND TRIM NUMBER. THE FOLLOWING SHOW THE INFORMATION THAT SHALL BE SHOWN FOR VARIOUS EQUIPMENT TYPES.

VESSEL:	HEATER/COOLER:
SIZE (DIA & T/T)	DUTY
DESIGN PRESSURE	DESIGN PRESSURE
DESIGN TEMPERATURE	DESIGN TEMPERATURE
TRIM NUMBER	TRIM NUMBER
PUMP:	**COMPRESSOR:**
RATED CAPACITY	RATED CAPACITY
DIFFERENTIAL HEAD	DIFFERENTIAL HEAD
INSTALLED POWER	INSTALLED POWER
TRIM NUMBER	TRIM NUMBER
FILTERS:	**TANKS:**
MESH SIZE	SIZE
DESIGN PRESSURE	DESIGN PRESSURE
DESIGN TEMPERATURE	DESIGN TEMPERATURE
TRIM NUMBER	TRIM NUMBER

4. THE FOLLOWING ARE GUIDLINES AS TO LOCATION OF TAG LABELS ON PEFSs. BEYOND ANYTHING ELSE, CLARITY SHOULD BE THE PRIMARY AIM. VESSELS AND TANKS SHALL BE LABELLED WITHIN THE OUTLINE, AS NEAR CENTRE AS DRAWING PERMITS. PUMPS TO BE TAGGED IMMEDIATELY BELOW OR TO ONE SIDE. PACKAGES TO BE LABELLED WITHIN THE PACKAGE BOUNDARY, NEAR CENTRE. EXCHANGERS (PRINTED CIRCUIT HEAT EXCHANGERS OR PLATE) TO BE LABELLED ABOVE OUTLINE.
5. THE FOLLOWING TERMS ARE EXPLAINED BELOW.

NO POCKETS:	NO LIQUID POCKETS. PIPING LOW POINTS BELOW OUTLET ELEVATIONS ARE NOT PERMITTED.
SLOPE:	ELEVATION CHANGES ARE CONSTANTLY DOWNWARD ONLY AT A GRADIENT EQUAL TO OR GREATER THAN THAT INDICATED. NO POCKETS ARE PERMITTED.
FREE DRAINING:	ELEVATION CHANGES ARE DOWNWARD ONLY, NO POCKETS ARE PERMITTED.
GRAVITY DRAIN:	ELEVATIONS DOWNSTREAM NEVER EXCEED INLET ELEVATION. LINE MAY CONTAIN POCKETS.

6. THE PREFIX TO INSTRUMENT TAGS WILL BE INFERRED FROM THE PEFS UNIT NUMBER (E.G 300). THEY ARE LOCATED ON. EXCEPTIONS TO THIS WILL BE SPECIFICALLY NOTED.
7. TEST POINTS: FUNCTION CODE 'P' IS USED FOR TEST POINT CONNECTIONS. THE FOLLOWING TEST POINTS ARE DEFINED.
   - FP: FLOW POINT, BEING EITHER AN ORIFICE FLANGE SET WITH TAPPINGS, MECHANICAL ISOLATION VALVES AND ORIFICE PLATE OR AN INSERTION TYPE FLOW NOZZLE WITH MECHANICAL ISOLATION VALVES.
   - PP: PRESSURE POINT: NOZZLE WITH MECHANICAL ISOLATION VALVE.
   - QP: ANALYSER POINT: NOZZLE WITH MECHANICAL ISOLATION VALVE.
   - TP: TEMPERATURE POINT: NOZZLE WITH THERMOWELL.
8. SIL = SAFTEY INTEGRITY LEVEL.

REVISIONS

REV	DATE	DRAWN BY	CHKD BY	ENG BY	APPD BY	DESCRIPTION

REFERENCE DRAWINGS

DRAWING No.	TITLE
ZG LEGEND SHEET 5	PCCS-04-PTD-PX-2365-00000-005
ZG LEGEND SHEET 4	PCCS-04-PTD-PX-2365-00000-004
ZG LEGEND SHEET 3	PCCS-04-PTD-PX-2365-00000-003
ZG LEGEND SHEET 2	PCCS-04-PTD-PX-2365-00000-002
ZG LEGEND SHEET 1	PCCS-04-PTD-PX-2365-00000-001

ATTENTION

PETERHEAD CCS

DRAWING TITLE

PROCESS ENGINEERING FLOW SCHEME
ZG LEGEND SHEET 1
MODIFIED FOR PCCS

PCCS-04-PTD-PX-2365-00000-001

REV K01

GENERAL ABBREVIATIONS

AG	ABOVE GROUND
ADC	ACCIDENTALLY OIL CONTAMINATED
ATM	ATMOSPHERE
BL	BATTERY LIMIT
BTL	BOTTOM TANGENT LINE
CD	CLOSED DRAINS
DCS	DISTRIBUTION CONTROL SYSTEM
EL	ELEVATION (mm)
ESD	EMERGENCY SHUTDOWN
EDP	EMERGENCY DEPRESSURING
FB	FULL BORE
FG	FUEL GAS SUPPLY
GD	GLYCOL DRAINS
HC	HOSE CONNECTION
HH	HAND HOLE
HHV	HIGH HEATING VALVE
HIPPS	HIGH INTEGRITY PRESSURE PROTECTION SYSTEM
HMD	HEATING MEDIA DRAINS
HMR	HEATING MEDIA RETURNS
HMS	HEATING MEDIA SUPPLY
HPF	HIGH PRESSURE VENT/FLARE
IA	INSTRUMENT AIR
IPF	INSTRUMENTED PROTECTIVE FUNCTION
IPS	INSTUMENTED PROTECTIVE SYSTEM
LC	LOCKED CLOSED
LO	LOCKED OPEN
LPF	LOW PRESSURE FLARE
MOV	ELECTRIC MOTOR OPERATED VALVE
MW	MANWAY
N2	NOTIRGEN SUPPLY
NC	NORMALLY CLOSED
NNF	NORMALLY NO FLOW
NO	NORMALLY OPEN
OD	OPEN DRAINS
PPM	PARTS PER MILLION
PZE	PRESSURE SAFTEY ELEMENT (BURSTING DISC)
RB	REDUCED BORE
RO	RESTRICTION ORIFICE
RS	REMOVABLE SPOOL
RV	RELIEF VALVE
SC	SAMPLE CONNECTION
SIL	SAFTEY INTEGRITY LEVEL
SP	SET PRESSURE
TP	TIE-IN POINT
TSO	TIGHT SHUT OFF
UC	UTILITY CONNECTION

PIPE SYMBOLS

- PROCESS, MAIN PIPE
- SECONDARY PROCESS PIPE/UTILITY PIPE
- HEAT TRACED PIPING
- SLOPE 1:100 — SLOPE INDICATOR
- H — INDICATOR, INSULATION (EG. H)
- INDICATOR, STREAM NUMBER
- FLANGE JOINT
- TRANSITION FLANGE
- HUB CONNECTOR
- INSULATING FLANGE SET/SPOOL
- PRIMARY ELEMENT VENTURI TYPE
- PRESSURE SAFTEY ELEMENT (BURSTING DISC)
- RESTRICTION ORIFICE PLATE, FLANGES
- SPOOL PIECE STRAIGHT
- SPOOL PIECE 90 DEGREES
- Y-TYPE STRAINER
- FLEXIBLE HOSE, FLANGED
- EXPANSION/CONTRACTION BELLOWS
- SWIVEL JOINT
- SPADE BLIND
- SPACER RING
- SPECTACLE BLIND NORMALLY CLOSED
- SPECTACLE BLIND NORMALLY OPEN
- CONICAL STRAINER (TEMPORARY)
- FLAME ARRESTOR
- BIRD SCREEN
- OPEN VENT
- TO/FROM DRAWING NUMBER — FLOW SHEET CONTINUATION (PROCESS/MAJOR LINES)
- TO/FROM UTILITY DRW.NO. — FLOW SHEET CONTINUATION (UTILITY LINES)
- SP / xxx — SPECIAL PIPING ITEM

PIPE SYMBOLS CONT.

- CONCENTRIC REDUCER
- ECCENTRIC REDUCER, BOTTOM FLAT
- ECCENTRIC REDUCER, TOP FLAT
- WELDED CAP
- BLIND FLANGE
- CAP SCREWED
- HOSE CONNECTION
- END CLOSURE, QUICK RELEASE
- PLUG
- TUNDISH

VALVE BASIC SYMBOLS

- GENERAL VALVE
- CHECK VALVE
- THREE WAY VALVE
- FOUR WAY VALVE
- ANGLE VALVE
- RELIEF VALVE
- BREATHER VALVE
- VACUUM VALVE
- PILOT OPERATED RELIEF VALVE
- DETAILS TO BE SHOWN NEXT TO PZV AS:
- RV 001 — SP: XXX barg; SIZE: ABC
  - A – INLET SIZE (INCHES)
  - B – ORIFICE SIZE (ACCORDING TO API 526)
  - C – OUTLET SIZE (INCHES)
- BUCKLING PIN DEVICE
- MODULAR DOUBLE BLOCK & BLEED VALVE
- GATE VALVE
- EXPANDING SPLIT WEDGE GATE VALVE WITH DRAIN
- BALL VALVE
- GLOBE VALVE
- NEEDLE VALVE
- PLUG VALVE
- DIAPHRAGM VALVE
- BUTTERFLY VALVE
- HAND OPERATED. ACTUATED BY HAND WHEEL, WRENCH, LEVER OR GEAR

LINE DESIGNATION

2"– P20 123 – 153883X – H

- INSULATION CLASS
- PIPING CLASS
- LINE SEQUENTIAL NUMBER
- SYSTEM NUMBER
- SERVICE CODE
- NOMINAL LINE SIZE (INCHES)

SERVICE CODES

A –	AIR SYSTEMS
B –	VENT/BLOWDOWN/RELIEF
D –	DRAINS (OPEN/CLOSED ETC)
F –	FUEL
P –	PROCESS (INCLUDING MEG, FLARE & CO_2)
W –	WATER SYSTEMS (POTABLE, UTILITY & FIREWATER)

SYSTEM NUMBER

01	FLOWLINES AND MANIFOLD	80	EXHAUST
20	PROCESS		
46	FRESH WATER		
47	FOUL WATER		
50	VENT		
54	DIESEL		
59	NITROGEN		
60	CLOSED DRAIN		
61	HAZARDOUS OPEN DRAIN		
73	MEG		

INSULATION CLASS

A	ACOUSTIC INSULATION	APPLICABLE TO COLUMNS/VESSELS & PIPING
C	COLD INSULATION	
E	ELECTRICAL TRACING	
H	HOT INSULATION	
J	JACKETED PIPE	
P	PERSONAL PROTECTION	

SPECIFIC NOTES

1. ALL ELEVATIONS AND DIMENSIONS OF EQUIPMENT AND PIPE ROUTING ARE RELATIVE ALTHOUGH NOT TO SCALE. EQUIPMENT SHALL BE SHOWN IN REALISTIC PROPORTIONA, WITH PUMPS AT THE BOTTOM AND AIRCOOLERS AT THE TOP OF THE PEFS. MAJOR EQUIPMENT SHALL BE SHOWN AT ONE LEVEL, eg. FURNACES, COLUMNS etc. IF DIFFERENT LEVELS ARE REQUIRED THE ELEVATIONS SHALL BE STATED.

2. CONTINUATION FLAGS TO SHOW CONTINUATION DRAWING NUMBER TOGETHER WITH DESTINATION EQUIPMENT TAG NUMBER ONLY.

3. EQUIPMENT DATA BLOCKS SHALL SHOW TAG NUMBER AND DESCRIPTION, WITH DEISGN AND OPERATING PRESSURE AND TEMPERATURES AND TRIM NUMBER. THE FOLLOWING SHOW THE INFORMATION THAT SHALL BE SHOWN FOR VARIOUS EQUIPMENT TYPES.

VESSEL:	HEATER/COOLER
SIZE (DIA T/T)	DUTY
DESIGN PRESSURE	DESIGN PRESSURE
DESIGN TEMPERATURE	DESIGN TEMPERATURE
TRIM NUMBER	TRIM NUMBER

PUMP:	COMPRESSOR:
RATED CAPACITY	RATED CAPACITY
DIFFERNTIAL HEAD	DIFFERENTIAL HEAD
INSTALLED POWER	INSTALLED POWER
TRIM NUMBER	TRIM NUMBER

FILTERS:	TANKS:
MESH SIZE	SIZE
DESIGN PRESSURE	DESIGN PRESSURE
DESIGN TEMPERATURE	DESIGN TEMPERATURE
TRIM NUMBER	TRIM NUMBER

4. THE FOLLOWING ARE GUILDLINES AS TO LOCATION OF TAG LABELS ON PEFS's. BEYOND ANYTHING ELSE, CLARITY SHOULD BE THE PRIMARY AIM. VESSELS AND TANKS SHALL BE LABELLED WITHIN THE OUTLINE, AS NEAR CENTRE AS DRAWING PERMITS. PUMPS TO BE TAGGED IMMEDIATELY BELOW OR TO ONE SIDE. PACKAGES TO BE LABELLED WITHIN THE PACKAGE BOUNDARY, NEAR CENTRE. EXCHANGERS (PRINTED CIRCUIT HEAT EXCHANGERS OR PLATE) TO BE LABELLED ABOVE OUTLINE.

5. THE FOLLWING TERMS ARE EXPLAINED BELOW.

NO POCKETS:	NO LIQUID POCKETS. PIPING LOW POINTS BELOW OUTLET ELEVATIONS ARE NOT PERMITTED.
SLOPE:	ELEVATION CHANGES ARE CONSTANTLY DOWNWARD ONLY AT A GRADIENT EQUAL TO OR GREATER THAN THAT INDICATED NO POCKETS ARE PERMITTED.
FREE DRAINING:	ELEVATION CHANGES ARE DOWNWARD ONLY. NO POCKETS ARE PERMITTED.
GRAVITY DRAIN:	ELEVATIONS DOWNSTREAM NEVER EXCEED INLET ELEVATION. LINE MAY CONTAIN POCKETS.

6. THE PREFIX TO INSTRUMENT TAGS WILL BE INFERRED FROM THE PEFS UNIT NUMBER (E.G. 300). THEY ARE LOCATED ON. EXCEPTIONS TO THIS WILL BE SPECIFICALLY NOTED.

7. TEST POINTS: FUNCTION CODE 'P' IS USED FOR TEST POINT CONNECTIONS. THE FOLLOWING TEST POINTS ARE DEFINED.

FP:	FLOW POINT, BEING EITHER AN ORIFICE FLANGE SET WITH TAPPINGS, MECHANICAL ISOLATION VALVES AND ORIFICE PLATE OR AN INSERTION TYPE FLOW NOZZLE WITH MECHANICAL ISOLATION VALVES.
PP:	PRESSURE POINT: NOZZLE WITH MECHANICAL ISOLATION VALVE.
QP:	ANALYSER POINT: NOZZLE WITH MECHANICAL ISOLATION VALVE.
TP:	TEMPERATURE POINT: NOZZLE WITH THEROWELL

8. SIL= SAFTERY INTEGRITY LEVEL.

REVISIONS

REV	DATE	DRAWN BY	CHKD BY	ENG BY	APPD BY	DESCRIPTION

REFERENCE DRAWINGS

DRAWING No.	TITLE
ZG LEGEND SHEET 5	PCCS-04-PTD-PX-2365-00000-005
ZG LEGEND SHEET 4	PCCS-04-PTD-PX-2365-00000-004
ZG LEGEND SHEET 3	PCCS-04-PTD-PX-2365-00000-003
ZG LEGEND SHEET 2	PCCS-04-PTD-PX-2365-00000-002
ZG LEGEND SHEET 1	PCCS-04-PTD-PX-2365-00000-001

ATTENTION

PETERHEAD CCS

DRAWING TITLE

PROCESS ENGINEERING FLOW SCHEME
ZG LEGEND SHEET 2
MODIFIED FOR PCCS

PCCS-04-PTD-PX-2365-00000-002

REV K01

PROCESS MEASUREMENTS

MEASURING POINT ON PROCESS LINE OR EQUIPMENT.

SURFACE MEASURING POINT ON PROCESS LINE OR EQUIPMENT

A SINGLE MEASURING POINT INSIDE EQUIPMENT AT A PARTICULAR POINT.

(X) MEASUREMENT ELEMENT MEASURE POINT (X) DEFINES THE TYPE OF MEASUREMENT.

(X)	=	
( )	=	UNDEFINED
(CM)	=	CORIOLIS
(DP)	=	DIFFERENTIAL PRESSURE
(EM)	=	ELECTRO MAGNETIC
(PD)	=	POSITIVE DISPLACEMENT
(TM)	=	TURBINE
(US)	=	ULTRASONIC
(VM)	=	VORTEX
(CP)	=	CAPACITANCE
(DIS)	=	DISPLACER
(NU)	=	NUCLEAR
(RD)	=	RADAR
(TF)	=	TUNING FORK
(RTD)	=	RESISTANCE TEMPERATURE DETECTOR
(TC)	=	THERMO COUPLE
(VC)	=	V-CONE

LINE SYMBOLS

TAG NUMBER | DRG.No. — SIGNAL TO/FROM INSTRUMENT FUNCTION WITH THE MENTIONED TAG NIUMBER, LOCATED AT THE REFERENCED PEFS DRAWING

IMPULSE LINE

ELECTRICAL SIGNAL

CAPILLARY TUBING

HYDRAULIC SIGNAL

DATA LINK

INSTRUMENT SYMBOLS

INSTRUMENT TRACING

UNIT TYPE No. — 3-PORT SELECTOR SWITCH

UNIT TYPE No. — 4-PORT SELECTOR SWITCH

INSTRUMENT SYMBOLS STANDARD FUNCTIONS

FIELD OR LOCALLY MOUNTED

H/HH L/LL — DISPLAY ON DCS WITH ALARM TRIP SETTINGS

LOCAL CONTROL PANEL

123UZ-456
IPS V-7890
DOCUMENT R-123.456 — EXAMPLE OF INSTRUMENT SYMBOL FOR IPF

ESD — SIGNAL TO ESD SYSTEM

F&G — SIGNAL FROM FIRE & GAS SYSTEM

INSTRUMENT SYMBOLS (CONT'D.)

LINE 1 / LINE 2

LINE 1 – IDENTIFICATION LETTERS. SEE SHEET 4 FOR DETAILS

LINE 2 – SEQUENTIAL NUMBER FIRST TWO DIGITS ARE SYSTEM NUMBER. SEE SHEET 2 FOR DETAILS

(TAG 1)
(TAG 2)
(TAG 3)

(TAG 1) TOP RIGHT SUFFICES (SHOWN WHEN NEEDED~)

H	=	HIGHT SWITCH/ALARM POINT
HH	=	HIGH HIGH SWITCH/ALARM POINT
O	=	OPEN POSITION
SIL (X)	=	SAFTEY INTEGRITY LEVEL (SIL) SHOWN FOR SWITCHING FUNCTIONS (S OR Z) OF SIL o2 AND ABOVE
H-sel	=	HIGH SIGNAL SELECTOR
H-lim	=	HIGH SIGNAL LIMITER
+REV	=	SIGNAL REVERSAL

(TAG 2) BOTTOM RIGHT SUFFICES (SHOWN WHEN NEEDED~)

L	=	LOW SWITCH/ALARM POINT
LL	=	LOW LOW SWITCH/ALARM POINT
C	=	CLOSEC POSITION
SIL (X)	=	SAFTEY INTEGRITY LEVEL (SIL) SHOWN FOR SWITCHING FUNCTIONS (S OR Z) OF SIL o2 AND ABOVE
L-sel	=	LOW SIGNAL SELCTOR
L-lim	=	LOW SIGNAL LIMITER
+REV	=	SIGNAL REVERSAL

(TAG 3) MISCELLANEOUS SUFFICES (SHOWN WHEN NEEDED)

#	=	ADDITIONAL FUNCTIONALITY IS COVERED BY OTHER DOCUMNETS (EG: NARRATIVE)
RESET	=	RESET POSITION
OOS	=	OPERATIONAL OVERRIDE SWITCH
1oo2	=	ONE OUT OF TWO CONFIGURATION
2oo2	=	TWO OUT OF TWO CONFIGURATION
2oo3	=	TWO OUT OF THREE CONFIGURATION

TAG NUMBERING

ZG – FT – 10001 – A

- A — SUFFIX (IF NEEDED)
- 10001 — SEQUENTIAL NUMBER
- 10 — STREAM IDENTIFIER
- FT — MEASURED VARIABLE
- ZG — GOLDENEYE IDENTIFIER

INSTRUMENT SYMBOLS

CLOSING UPON LOSS OF POWERING MEDIUM

OPENING UPON LOSS OF POWERING MEDIUM

LOCK UP, NOT DRIFTING UPON LOSS OF POWERING MEDIUM

LOCK-UP, DRIFTING CLOSE UPON LOSS OF POWERING MEDIUM

LOCK-UP, DRIFTING OPEN UPON LOSS OF POWERING MEDIUM

H — HAND-OPERATED (CONTROL VALVE WITHOUT MOTOR)

ACTUATOR OPERATED (BASIC SYMBOL)

H — ACTUATOR OPERATED (BASIC SYMBOL WITH HAND WHEEL)

M — ELECTRICAL MOTOR OPERATED VALVE

P — HYDRAULIC MOTOR OPERATED VALVE

SELF ACTING BACK-PRESSURE REGULATOR, INTERNAL SENSING

SELF ACTING BACK-PRESSURE REGULATOR, EXTERNAL SENSING

SELF ACTING REDUCING REGULATOR INTERNAL SENSING

SELF ACTING REDUCING REGULATOR EXTERNAL SENSING

SELF ACTING DIFFERNTIAL PRESSURE REGULATOR, INTERNAL SENSING

SELF ACTING DIFFERNTIAL PRESSURE REGULATOR, EXTERNAL SENSING

SELF ACTING TEMPERATURE REGULATOR IN MIXING SERVICE

SOLENOID OPERATED

ARROW SHOWS PORT CONNECTION UPON LOSS OF POWERING MEDIUM (ARROW TO BE USED THREE-WAY AND FOUR-WAY VALVE ONLY)

(TAG) (x) — SOLENOID OPERATED 3-WAY VALVE IN AN INSTRUMENT SIGNAL LINEM
(X) IS: NE – NORMALLY ENERGISED
NDE– NORMALLY DE-ENERGISED
IN AN INSTRUMENT SIGNAL LINE.
(X) IS: NE – NORMALLY ENERGISED
NDE – NORMALLY DE-ENERGISED

(TAG) (x) — SOLENOID OPERATED 4-WAY VALVE

MINIMUM TRAVEL STOP

MAXIMUM TRAVEL STOP

SPECIFIC NOTES

1. ALL ELEVATIONS AND DIMENSIONS OF EQUIPMENT AND PIPE ROUTING ARE RELATIVE ALTHOUGH NOT TO SCALE. EQUIPMENT SHALL BE SHOWN IN REALISTIC PROPORTIONS, WITH PUMPS AT THE BOTTOM AND AIRCOOLERS AT THE TOP OF THE PEFS. MAJOR EQUIPMENT SHALL BE SHOWN AT ONE LEVEL, eg. FURNACES, COLUMNS etc. IF DIFFERENT LEVELS ARE REQUIRED THE ELEVATIONS SHALL BE STATED.
2. CONTINUATION FLAGS TO SHOW CONTINUATION DRAWING NUMBER TOGETHER WITH DESTINATION EQUIPMENT TAG NUMBER ONLY.
3. EQUIPMENT DATA BLOCKS SHALL SHOW TAG NUMBER AND DESCRIPTION, WITH DESIGN AND OPERATING PRESSURE AND TEMPERATURES AND TRIM NUMBER. THE FOLLOWING SHOW THE INFORMATION THAT SHALL BE SHOWN FOR VARIOUS EQUIPMENT TYPES.

VESSEL:	HEATER/COOLER:
SIZE (DIA & T/T)	DUTY
DESIGN PRESSURE	DESIGN PRESSURE
DESIGN TEMPERATURE	DESIGN TEMPERATURE
TRIM NUMBER	TRIM NUMBER

PUMP:	COMPRESSOR:
RATED CAPACITY	RATED CAPACITY
DIFFERENTIAL HEAD	DIFFERENTIAL HEAD
INSTALLED POWER	INSTALLED POWER
TRIM NUMBER	TRIM NUMBER

FILTERS:	TANKS:
MESH SIZE	SIZE
DESIGN PRESSURE	DESIGN PRESSURE
DESIGN TEMPERATURE	DESIGN TEMPERATURE
TRIM NUMBER	TRIM NUMBER

4. THE FOLLOWING ARE GUIDLINES AS TO LOCATION OF TAG LABELS ON PEFSs. BEYOND ANYTHING ELSE, CLARITY SHOULD BE THE PRIMARY AIM. VESSELS AND TANKS SHALL BE LABELLED WITHIN THE OUTLINE, AS NEAR CENTRE AS DRAWING PERMITS. PUMPS TO BE TAGGED IMMEDIATELY BELOW OR TO ONE CENTRE. EXCHANGERS (PRINTED CIRCUT HEAT EXCHANGERS OR PLATE) TO BE LABELLED ABOVE OUTLINE.
5. THE FOLLOWING TERMS ARE EXPLAINED BELOW.

NO POCKETS:	NO LIQUID POCKETS. PIPING LOW POINTS BELOW OUTLET ELEVATIONS ARE NOT PERMITTED.
SLOPE:	ELEVATION CHANGES ARE CONSTANTLEY DOWNWARD ONLY AT A GRADIENT EQUAL TO OR GREATER THAN THAT INDICATED. NO POCKETS ARE PERMITTED.
FREE DRAINING:	ELEVATION CHANGES ARE DOWNWARD ONLY. NO PCCKETS ARE PERMITTED.
GRAVITY DRAIN:	ELEVATIONS DOWNSTREAM NEVR EXCEED INLET ELEVATION. LINE MAY CONTAIN POCKETS.

6. DELETED.
7. TEST POINTS: FUNCTION CODE 'P' IS USED FOR TEST POINT CONNECTIONS. THE FOLLOWING TEST POINTS ARE DEFINED.

FP:	FLOW POINT, BEING EITHER AN ORIFICE SET WITH TAPPINGS, MECHANICAL ISOLADTION VALVES AND ORIFICE PLATE OR AN INSERTION TYPE FLOW NOZZLE WITH MECHANICAL ISOLATION VALVES.
PP:	PRESSUR POINT: NOZZLE WITH MECHANICAL ISOLATION VALVE.
QP:	ANALYSER POINT: NOZZLE WITH MECHANICAL ISOLATION VALVE.
TP:	TEMPERATURE POINT: NOZZLE WITH THERMOWELL.

8. SIL = SAFTEY INTEGRITY LEVEL.

REV	DATE	DRAWN BY	CHKD BY	ENG BY	APPD BY	DESCRIPTION

REVISIONS

DRAWING No.	TITLE
ZG LEGEND SHEET 5	PCCS-04-PTD-PX-2365-00000-005
ZG LEGEND SHEET 4	PCCS-04-PTD-PX-2365-00000-004
ZG LEGEND SHEET 3	PCCS-04-PTD-PX-2365-00000-003
ZG LEGEND SHEET 2	PCCS-04-PTD-PX-2365-00000-002
ZG LEGEND SHEET 1	PCCS-04-PTD-PX-2365-00000-001

REFERENCE DRAWINGS

ATTENTION

PETERHEAD CCS

DRAWING TITLE

PROCESS ENGINEERING FLOW SCHEME
ZG LEGEND SHEET 3
MODIFIED FOR PCCS

PCCS-04-PTD-PX-2365-00000-003

REV K01

LETTER CODES FOR IDENTIFICATION OF INSTRUMENT FUNCTIONS

	MEASURED VARIABLE CODE PROCESS CONDITION, PROPERTY MEASURED OR INITIATING VARIABLE	MODIFIER	FUNCTION CODE
A			ALARM
B			STATUS DISPLAY
C			CONTROLLING
D		DIFFERENCE	
E	ELECTRICAL VARIABLES REMARK: ADD NOTE TO THE SYMBOL TO SPECIFY THE PROPERTY MEASURED.		ELEMENT (SENSOR, WITHOUT TRANSMITTER)
F	FLOWRATE	RATIO	
G	POSITION OR RUNNING EXAMPLE:GB FOR RUNNING FOR STATUS DISPLAY		GAUGE EXAMPLES: FG, LG, PG, TG
H	HAND (MANUALLY) OPERATED		
I			INDICATING, I.E. DISPLAY THE VALUE OF A MEASURED PROPERTY
J		SCAN	
K	TIME	TIME RATE OF CHANGE	
(KS)	BINARY LOGIC FUNCTION, NOT SAFETY RELATED OR SIL RATED		
L	LEVEL		
M			MAINTENANCE, EG, MAINTENANCE OVERRIDE SWITCH
MOV	MOTOR – OPERATED VALVE (MECHANICAL/ELECTRICAL) REMARK : RELATED INSTRUMENT FUNCTIONS TO BE SPECIFIED SEPARATELY		
N			
O			
P	PRESSURE,		TEST–POINT CONNECTION REMARK : FOR DETAILS SEE NOTE 7
Q	QUALITY REMARK : ADD NOTE TO THE SYMBOL TO SPECIFY THE PROPERTY MEASURED		INTEGRATING OR SUMMATING
R	NUCLEAR RADIATION		RECORDING REMARK : ONLY TO BE USED FOR PERMANENT RECORDING OUTSIDE THE DCS
RO	RESTRICTION ORIFICE		
RV	RELIEF VALVE		
S	SPEED OR FREQUENCY		SWITCHING, NOT SAFETY RELATED OR SIL RATED
T	TEMPERATURE		TRANSMITTING REMARK : SHOW ONLY ON PEFS IF REQUIRED TO CLARIFY THE FUNCTIONALITY
TRV	THERMAL RELIEF VALVE		
U	MULTI – VARIABLE EXAMPLE : A UC–Y REPRESENTS A SMOC OR ANTI SURGE CONTROLLER		
UZ	BINARY LOGIC FUNCTION FOR SIL1 AND ABOVE (NOTE 3)		
V			FINAL ELEMENT, USE THE FOLLOWING COMBINATIONS : – CV FOR A THROTTLING FINAL ELEMENT (EG FCV/PCV) – KSV FOR A FINAL ELEMENT ASSOCIATED WITH A KS–TYPE BINARY LOGIC FUNCTION – UZV FOR A FINAL ELEMENT ASSOCIATED WITH UZ–TYPE BINARY LOGIC FUNCTION
W	WEIGHT OR FORCE		
X	UNCLASSIFIED VARIABLES REMARK : ADD NOTE TO THE SYMBOL TO SPECIFY THE PROPERTY MEASURED		
Y			CALCULATING
Z			SAFETY RELATED SWITCHING, TO BE USED FOR SIL 1 AND ABOVE SEE NOTE 8

SPECIFIC NOTES

1. ALL ELEVATIONS AND DIMENSIONS OF EQUIPMENT AND IPE ROUTING ARE RELATIVE ALTHOUGH NOT TO SCALE, EQUIPMENT SHALL BE SHOWN IN LEVEL, eg. FURNACES, COLUMNS, etc. IF DIFFERENT LEVELS ARE REQUIRED THE ELEVATIONS SHALL BE STATED.

2. CONTINUATION FLAGS TO SHOW CONTINUATION DRAWING NUMBER TOGETHER WITH DESTINATION EQUIPMENT TAG NUMBER ONLY.

3. EQUIPMENT DATA BLOCKS SHALL SHOW TAG NUMBER AND DESCRIPTION, WITH DESIGN AND OPERATING PRESSURE AND TEMPERATURES AND TRIM NUMBER. THE FOLLOWING SHOW THE INFORMATION THAT SHALL BE SHOWN FOR VARIOUS EQUIPMENT TYPES.

VESSEL:	HEATER/COOLER:
SIZE (DIA & T/T)	DUTY
DESIGN PRESSURE	DESIGN PRESSURE
DESIGN TERMPERATURE	DESIGN TEMPERATURE
TRIM NUMBER	TRIM NUMBER
PUMP:	COMPRESSOR:
RATED CAPACITY	RATED CAPACITY
DIFFERENTIAL HEAD	DIFFERENTIAL HEAD
INSTALLED POWER	INSTALLED POWER
TRIM NUMBER	TRIM NUMBER
FILTERS:	TANKS:
MESH SIZE	SIZE
DESIGN PRESSURE	DESIGN PRESSURE
DESIGN TEMPERATURE	DESIGN TEMPERATURE
TRIM NUMBER	TRIM NUMBER

4. THE FOLLOWING ARE GUIDLINES AS TO LOCATION OF TAG LABELS ON PEFSs BEYOND ANYTHING ELSE, CLARITY SHOULD BE THE PRIMARY AIM. VESSELS AND TANKS SHALL BE LABELLED WITHIN THE OUTLINE, AS NEAR CENTRE AS DRAWING PERMITS. PUMPS TO BE TAGGED IMMEDIATLEY BELOW OR TO ONE SIDE. PACKAGES TO BE LABELLED WITHIN THE PACKAGE BOUNDARY, NEAR LABELLED ABOVE OUTLINE.

5. THE FOLLOWING TERMS ARE EXPLAINED BELOW.

NO POCKETS:	NO LIQUID POCKETS. PIPING LOW POINTS BELOW OUTLET ELEVATIONS ARE NOT.
SLOPE:	ELEVATION CHANGES ARE CONSTANTLEY DOWNWARD ONLY AT A GRADIENT EQUAL TO OR GREATER THAN THAT INDICATED.
FREE DRAINING:	ELEVATION CHANGES ARE DOWNWARD ONLY. NO POCKETS ARE PERMITTED.
GRAVITY DRAIN:	ELEVATIONS DOWNSTREAM NEVER EXCEED INLET ELEVATION. LINE MAY CONTAIN PCCKETS.

6. PEFS UNIT NUMBER (E.G 300). THEY ARE LOCATED ON. EXCEPTIONS TO THIS WILL BE SPECIFICALLY NOTED.

7. TEST POINTS: FUNCTION CODE 'P' IS USED FOR TEST POINT CONNECTIONS THE FOLLOWING TEST POINTS ARE DEFINED.

FP:	FLOW POINT, BEING EITHER AN ORIFICE FLANGE SET WITH TAPPINGS, MECHANICAL ISOLATION VALVES AND ORIFICE PLATE OR AN INSERTION TYPE FLOW NOZZLE WITH MECHANICAL ISOLATIOIN VALVES.
PP:	PRESSURE POINT: NOZZLE WITH MECHANICAL ISOLATION VALVE.
QP:	ANALYSER POINT: NOZZLE WITH MECHANICAL ISOLATION VALVE.

8. SIL = SAFTEY INTEGRITY LEVEL.

REV	DATE	DRAWN BY	CHKD BY	ENG BY	APPD BY	DESCRIPTION

REVISIONS

DRAWING No.	TITLE
ZG LEGEND SHEET 5	PCCS-04-PTD-PX-2365-00000-005
ZG LEGEND SHEET 4	PCCS-04-PTD-PX-2365-00000-004
ZG LEGEND SHEET 3	PCCS-04-PTD-PX-2365-00000-003
ZG LEGEND SHEET 2	PCCS-04-PTD-PX-2365-00000-002
ZG LEGEND SHEET 1	PCCS-04-PTD-PX-2365-00000-001

REFERENCE DRAWINGS

ATTENTION

PETERHEAD CCS

DRAWING TITLE

PROCESS ENGINEERING FLOW SCHEME
ZG LEGEND SHEET 4
MODIFIED FOR PCCS

PCCS-04-PTD-PX-2365-00000-004

REV K01

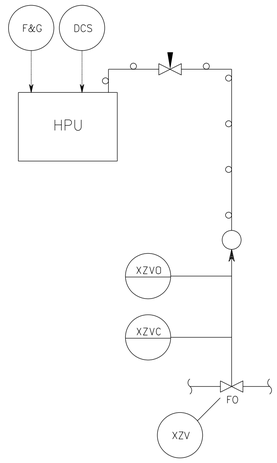

TYPICAL ARRANGEMENT 1 : HIGH RATE EDP VALVE

VALVE TYPE 1

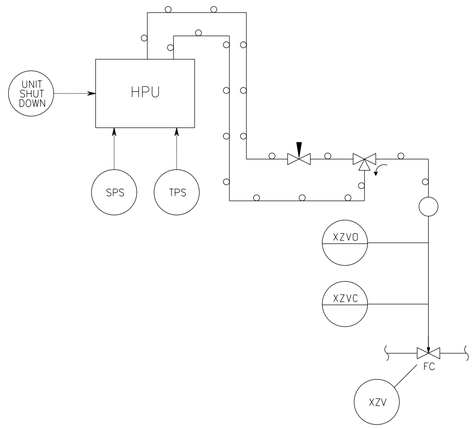

TYPICAL ARRANGEMENT 2 : ESD VALVE

VALVE TYPE 2

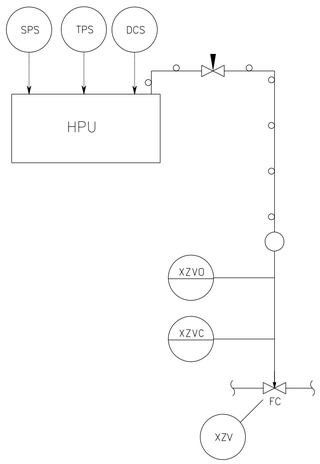

TYPICAL ARRANGEMENT 3 : ISOLATION VALVE & DCS CONTROL

VALVE TYPE 3

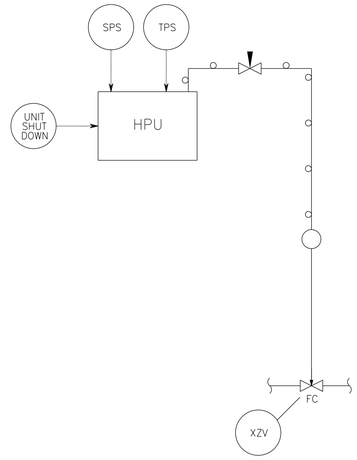

TYPICAL ARRANGEMENT 4 : ISOLATION VALVE

VALVE TYPE 4

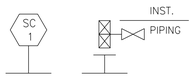

TYPICAL ARRANGEMENT 1 :

GAS SAMPLE

1. TOP MOUNTED ON HORIZONTAL LINE.
2. DOUBLE BLOCK & BLEED VALVE C/W ½" NPT PLUGGED INSTRUMENT CONNECTION

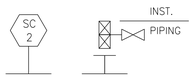

TYPICAL ARRANGEMENT 2 :

MULTI PHASE PROCESS GAS SAMPLE

1. 45° BEVEL CUT PROBE DESIGNED AND INSTALLED IN ACCORDANCE WITH DEP 32.31.50.10
2. SAMPLE CONNECTION TO BE FITTED TO VERTICAL LINE OR TOP OF HORIZONTAL LINE.
3. DOUBLE BLOCK & BLEED VALVE C/W ½" NPT PLUGGED INSTRUMENT CONNECTION & SAMPLE PROBE.

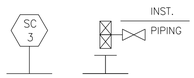

TYPICAL ARRANGEMENT 3 :

PROCESS LIQUID SAMPLE

1. SMAPLE CONNECTION TO BE FITTED TO VERTICAL LIINE OR SIDE OF HORIZONTAL LINE.
2. DOUBLE BLOCK & BLEED VALVE C/W ½" NPT PLUGGED INSTRUMENT CONNECTION.

INSTRUMENT INSTALLATION DETAILS (NOTE 6)

PRESSURE INSTRUMENTS NOTE 5

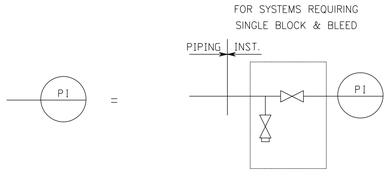

TYPICAL FOR PI, PG, PZLL, PZHH,
VALVES OR FLANGES TO LINE PIPE SPECIFICATION

PRESSURE DIFFERENTIAL INSTRUMENTS NOTE 5

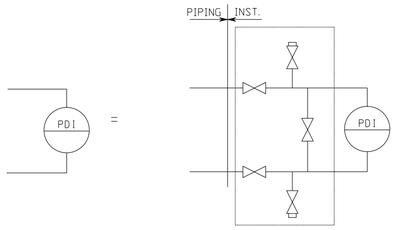

TYPICAL FOR PDI, PDG, PDZ
VALVES OT FLANGES TO LINE PIPE SPECIFICATION

FLOW INSTRUMENTS NOTE 5

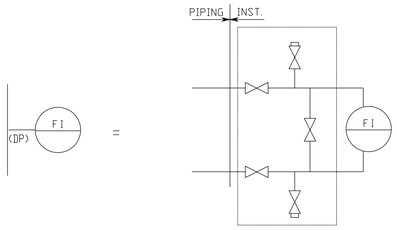

TYPICAL FOR FI, FIC – ORIFFICE PLATE AND
LI–DIFFRENTIAL PRESSURE
VALVES OT FLANGES TO LINE PIPE SPECIFICATION

LEVEL INSTRUMENTS NOTE 5

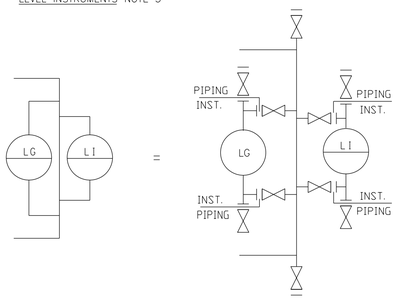

TYPICAL FOR LG, LI, LIC
VALVES OR FLANGES TO VESSEL SPECIFICATION

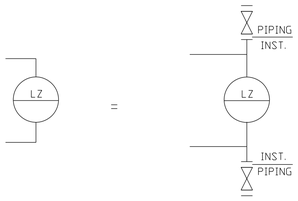

TYPICAL FOR LZ, LI, LG
VALVES OR FLANGES TO VESSEL SPECIFICATION

SPECIFIC NOTES

1. ACTUAL CONNECTION/ORIENTATION DETAILS (ALL PIPING, VALVES, NIPPLES & FLANGES BY PIPING) SUBJECT TO INSTRUMENT SELECTION.
2. ISOLATION DETAILS AS PER ISOLATION PHILOSOPHY AND DETAILED ON SEPCIFIC PEF's.
3. VALVE SIZES AS PER PIPING CLASS REQUIREMENT.
4. VALVE CONNECTION/END TYPE (PLUG OR FLANGE) TO BE IN ACCORDANCE WITH APPROPRIATE PIPING SPECIFICATION.
5. FOR ALL TRIP FUNCTIONS, ISOLATING VALVES TO BE LOCKED OPEN.
6. N2 PURGE PROCEDURE TO BE USED TO PREVENT BLOCKAGE OF INSTRUMENTATION BY SOLID CO2.

REV	DATE	DRAWN BY	CHKD BY	ENG BY	APPD BY	DESCRIPTION

REVISIONS

DRAWING No.	TITLE
ZG LEGEND SHEET 5	PCCS-04-PTD-PX-2365-00000-005
ZG LEGEND SHEET 4	PCCS-04-PTD-PX-2365-00000-004
ZG LEGEND SHEET 3	PCCS-04-PTD-PX-2365-00000-003
ZG LEGEND SHEET 2	PCCS-04-PTD-PX-2365-00000-002
ZG LEGEND SHEET 1	PCCS-04-PTD-PX-2365-00000-001

REFERENCE DRAWINGS

ATTENTION

PETERHEAD CCS

DRAWING TITLE

PROCESS ENGINEERING FLOW SCHEME
ZG LEGEND SHEET 5
MODIFIED FOR PCCS

PCCS-04-PTD-PX-2365-00000-005

REV K01

Instrument No. \ Well No.	ZG-WH-1	ZG-WH-2	ZG-WH-4	ZG-WH-5
FLOW LINE No	P01501	P01502	P01504	P01505
FT/FIA – FLOWLINE	10011	10021	10041	10051
FIA –	10011	10021	10041	10051
6" CHECK VALVE				
6" BALL VALVE				
XV –	10016	10026	10046	10056
VENT LINE No.	B50511	B50512	B50514	B50515
VENT LINE No.	B50521	B50522	B50524	B50525
2" BALL VALVE				
2" GATE VALVE				
FT/PIA – FLOWLINE	10018	10028	10048	10058
BP – VENT	50012	50022	50042	50052
PIA – VENT	50012	50022	50042	50052
RV – VENT	50013	50023	50043	50053
RO – VENT	50012	50022	50042	50052
SP				
TI FLOWLINE	10015	10025	10045	10055

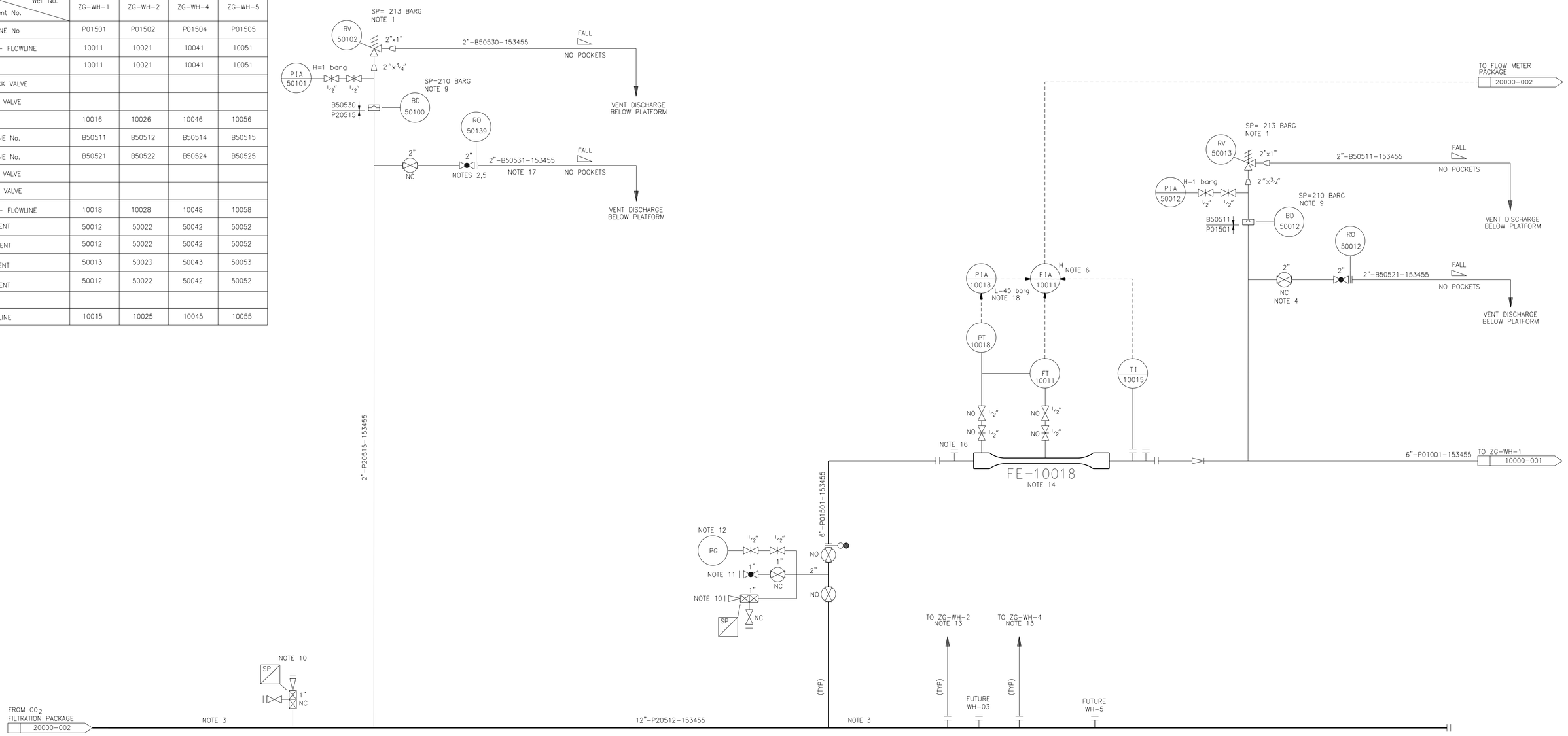

NOTES:

1. RELIEF VALVE PROVIDED FOR THERMAL RELIEF.
2. PRESSURE INDICATOR D/S FILTERS TO BE VISIBLE FROM VENTING VALVE NEXT TO R050139.
3. ALL PIPEWORK TO BE DESIGNED FOR OCCASIONAL TWO PHASE FLOW.
4. FLOWLINE TO BE ISOLATED FROM WELL AND INJECTION MANIFOLD BEFORE VENTING.
5. MANIFOLD TO BE ISOLATED FROM WELLS BEFORE VENTING.
6. HIGH ALARM FOR MAXIMUM WELL EROSION FLOWRATE.
7. DELETED.
8. DELETED.
9. BURSTING DISC RELIEF DEVICE.
10. N_2 PURGE CONNECTION.
11. VENT TO SAFE LOCATION.
12. TEMPORARY PRESSURE GAUGE (NOT TAGGED).
13. ANY 3 OUT OF THE 4 INJECTOR WELLS (WH 1,2,4,5) WILL BE CONNECTED TO THE INJECTION MANIFOLDS. WH3 WILL BE MONITORING WELL.
14. VENTURI METER STRAIGHT LENGTH REQUIREMENT (U/S – D/S) 5D/4D.
15. ALL ACTUATED ON/OFF VALVES TO BE FITTED WITH LIMIT SWITCHES.
16. FLANGED ENTRY FOR BOROSCOPE INSPECTION.
17. LOW TEMP PERSONNEL PROTECTION TO BE APPLIED TO ACCESSIBLE PIPEWORK.
18. LOW PRESSURE ALARM AT MINIMUM WELL INJECTION PRESSURE.

HOLDS:

1. BLOCK VALVE TAGS TO BE ASSIGNED IN DETAILED ENGINEERING.
2–7. CLEARED.

REV	DATE	DRAWN BY	CHKD BY	ENG BY	APPD BY	DESCRIPTION

REVISIONS

DRAWING No.	TITLE
ZG LEGEND SHEET 5	PCCS-04-PTD-PX-2365-00000-005
ZG LEGEND SHEET 4	PCCS-04-PTD-PX-2365-00000-004
ZG LEGEND SHEET 3	PCCS-04-PTD-PX-2365-00000-003
ZG LEGEND SHEET 2	PCCS-04-PTD-PX-2365-00000-002
ZG LEGEND SHEET 1	PCCS-04-PTD-PX-2365-00000-001

REFERENCE DRAWINGS

ATTENTION

ALL CONTINUATION NUMBERS WILL BE PRECEDED BY PCCS-04-PTD-PX-2365- UNLESS OTHERWISE STATED

PETERHEAD CCS

DRAWING TITLE

PROCESS ENGINEERING FLOW SCHEME
CO_2 INJECTION MANIFOLD

PCCS-04-PTD-PX-2365-01000-001

REV K01

ZG-WH-1

WELLHEAD XMAS TREE
DESIGN PRESSURE: 5000 PSI
DESIGN TEMPERATURE: -60°C (NOTE P17)

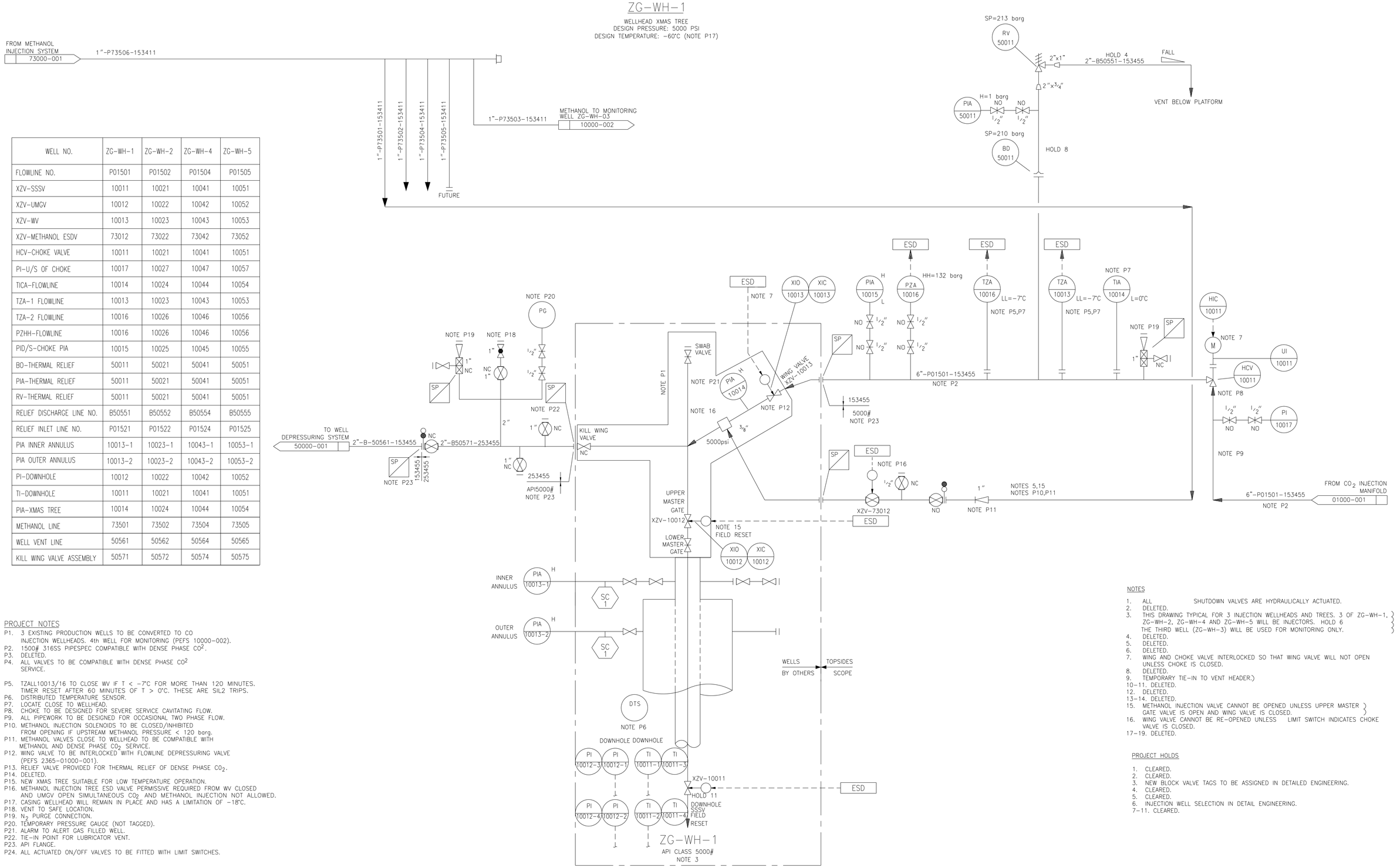

WELL NO.	ZG-WH-1	ZG-WH-2	ZG-WH-4	ZG-WH-5
FLOWLINE NO.	P01501	P01502	P01504	P01505
XZV-SSSV	10011	10021	10041	10051
XZV-UMGV	10012	10022	10042	10052
XZV-WV	10013	10023	10043	10053
XZV-METHANOL ESDV	73012	73022	73042	73052
HCV-CHOKE VALVE	10011	10021	10041	10051
PI-U/S OF CHOKE	10017	10027	10047	10057
TICA-FLOWLINE	10014	10024	10044	10054
TZA-1 FLOWLINE	10013	10023	10043	10053
TZA-2 FLOWLINE	10016	10026	10046	10056
PZHH-FLOWLINE	10016	10026	10046	10056
PID/S-CHOKE PIA	10015	10025	10045	10055
BO-THERMAL RELIEF	50011	50021	50041	50051
PIA-THERMAL RELIEF	50011	50021	50041	50051
RV-THERMAL RELIEF	50011	50021	50041	50051
RELIEF DISCHARGE LINE NO.	B50551	B50552	B50554	B50555
RELIEF INLET LINE NO.	P01521	P01522	P01524	P01525
PIA INNER ANNULUS	10013-1	10023-1	10043-1	10053-1
PIA OUTER ANNULUS	10013-2	10023-2	10043-2	10053-2
PI-DOWNHOLE	10012	10022	10042	10052
TI-DOWNHOLE	10011	10021	10041	10051
PIA-XMAS TREE	10014	10024	10044	10054
METHANOL LINE	73501	73502	73504	73505
WELL VENT LINE	50561	50562	50564	50565
KILL WING VALVE ASSEMBLY	50571	50572	50574	50575

PROJECT NOTES

P1. 3 EXISTING PRODUCTION WELLS TO BE CONVERTED TO CO INJECTION WELLHEADS. 4th WELL FOR MONITORING (PEFS 10000-002).
P2. 1500# 316SS PIPESPEC COMPATIBLE WITH DENSE PHASE CO^2.
P3. DELETED.
P4. ALL VALVES TO BE COMPATIBLE WITH DENSE PHASE CO^2 SERVICE.

P5. TZALL10013/16 TO CLOSE WV IF T < -7°C FOR MORE THAN 120 MINUTES. TIMER RESET AFTER 60 MINUTES OF T > 0°C. THESE ARE SIL2 TRIPS.
P6. DISTRIBUTED TEMPERATURE SENSOR.
P7. LOCATE CLOSE TO WELLHEAD.
P8. CHOKE TO BE DESIGNED FOR SEVERE SERVICE CAVITATING FLOW.
P9. ALL PIPEWORK TO BE DESIGNED FOR OCCASIONAL TWO PHASE FLOW.
P10. METHANOL INJECTION SOLENOIDS TO BE CLOSED/INHIBITED FROM OPENING IF UPSTREAM METHANOL PRESSURE < 120 barg.
P11. METHANOL VALVES CLOSE TO WELLHEAD TO BE COMPATIBLE WITH METHANOL AND DENSE PHASE CO_2 SERVICE.
P12. WING VALVE TO BE INTERLOCKED WITH FLOWLINE DEPRESSURING VALVE (PEFS 2365-01000-001).
P13. RELIEF VALVE PROVIDED FOR THERMAL RELIEF OF DENSE PHASE CO_2.
P14. DELETED.
P15. NEW XMAS TREE SUITABLE FOR LOW TEMPERATURE OPERATION.
P16. METHANOL INJECTION TREE ESD VALVE PERMISSIVE REQUIRED FROM WV CLOSED AND UMGV OPEN SIMULTANEOUS CO_2 AND METHANOL INJECTION NOT ALLOWED.
P17. CASING WELLHEAD WILL REMAIN IN PLACE AND HAS A LIMITATION OF -18°C.
P18. VENT TO SAFE LOCATION.
P19. N_2 PURGE CONNECTION.
P20. TEMPORARY PRESSURE GAUGE (NOT TAGGED).
P21. ALARM TO ALERT GAS FILLED WELL.
P22. TIE-IN POINT FOR LUBRICATOR VENT.
P23. API FLANGE.
P24. ALL ACTUATED ON/OFF VALVES TO BE FITTED WITH LIMIT SWITCHES.

NOTES

1. ALL SHUTDOWN VALVES ARE HYDRAULICALLY ACTUATED.
2. DELETED.
3. THIS DRAWING TYPICAL FOR 3 INJECTION WELLHEADS AND TREES. 3 OF ZG-WH-1, ZG-WH-2, ZG-WH-4 AND ZG-WH-5 WILL BE INJECTORS. HOLD 6 THE THIRD WELL (ZG-WH-3) WILL BE USED FOR MONITORING ONLY.
4. DELETED.
5. DELETED.
6. DELETED.
7. WING AND CHOKE VALVE INTERLOCKED SO THAT WING VALVE WILL NOT OPEN UNLESS CHOKE IS CLOSED.
8. DELETED.
9. TEMPORARY TIE-IN TO VENT HEADER.)

10-11. DELETED.
12. DELETED.
13-14. DELETED.
15. METHANOL INJECTION VALVE CANNOT BE OPENED UNLESS UPPER MASTER GATE VALVE IS OPEN AND WING VALVE IS CLOSED.
16. WING VALVE CANNOT BE RE-OPENED UNLESS LIMIT SWITCH INDICATES CHOKE VALVE IS CLOSED.

17-19. DELETED.

PROJECT HOLDS

1. CLEARED.
2. CLEARED.
3. NEW BLOCK VALVE TAGS TO BE ASSIGNED IN DETAILED ENGINEERING.
4. CLEARED.
5. CLEARED.
6. INJECTION WELL SELECTION IN DETAIL ENGINEERING.

7-11. CLEARED.

REV	DATE	DRAWN BY	CHKD BY	ENG BY	APPD BY	DESCRIPTION

REVISIONS

DRAWING No.	TITLE
ZG LEGEND SHEET 5	PCCS-04-PTD-PX-2365-00000-005
ZG LEGEND SHEET 4	PCCS-04-PTD-PX-2365-00000-004
ZG LEGEND SHEET 3	PCCS-04-PTD-PX-2365-00000-003
ZG LEGEND SHEET 2	PCCS-04-PTD-PX-2365-00000-002
ZG LEGEND SHEET 1	PCCS-04-PTD-PX-2365-00000-001

REFERENCE DRAWINGS

ATTENTION

ALL CONTINUATION NUMBERS WILL BE PRECEDED BY PCCS-04-PTD-PX-2365- UNLESS OTHERWISE STATED

PETERHEAD CCS

DRAWING TITLE
PROCESS ENGINEERING FLOW SCHEME
ZG TYPICAL CO_2 INJECTION WELLHEAD

PCCS-04-PTD-PX-2365-10000-001

REV K01

HOLD 1

Well No.	ZG-WH-3
Instrument No.	
XZV – SSSV	10031
XZV – UMGV	10032
XZV – WV	10033
PI – DO	10031
PIA – XMAS TREE	10034
PIA – INNER AN	10033-1
PIA – OUTER AN	10033-2
TI – DOWNHOLE	10031

ZG-WH-3

MONITORING WELLHEAD XMAS TREE
DESIGN PRESSURE : 5000 PSI
DESIGN TEMPERATURE : -60°C/85°C (NOTE P4)

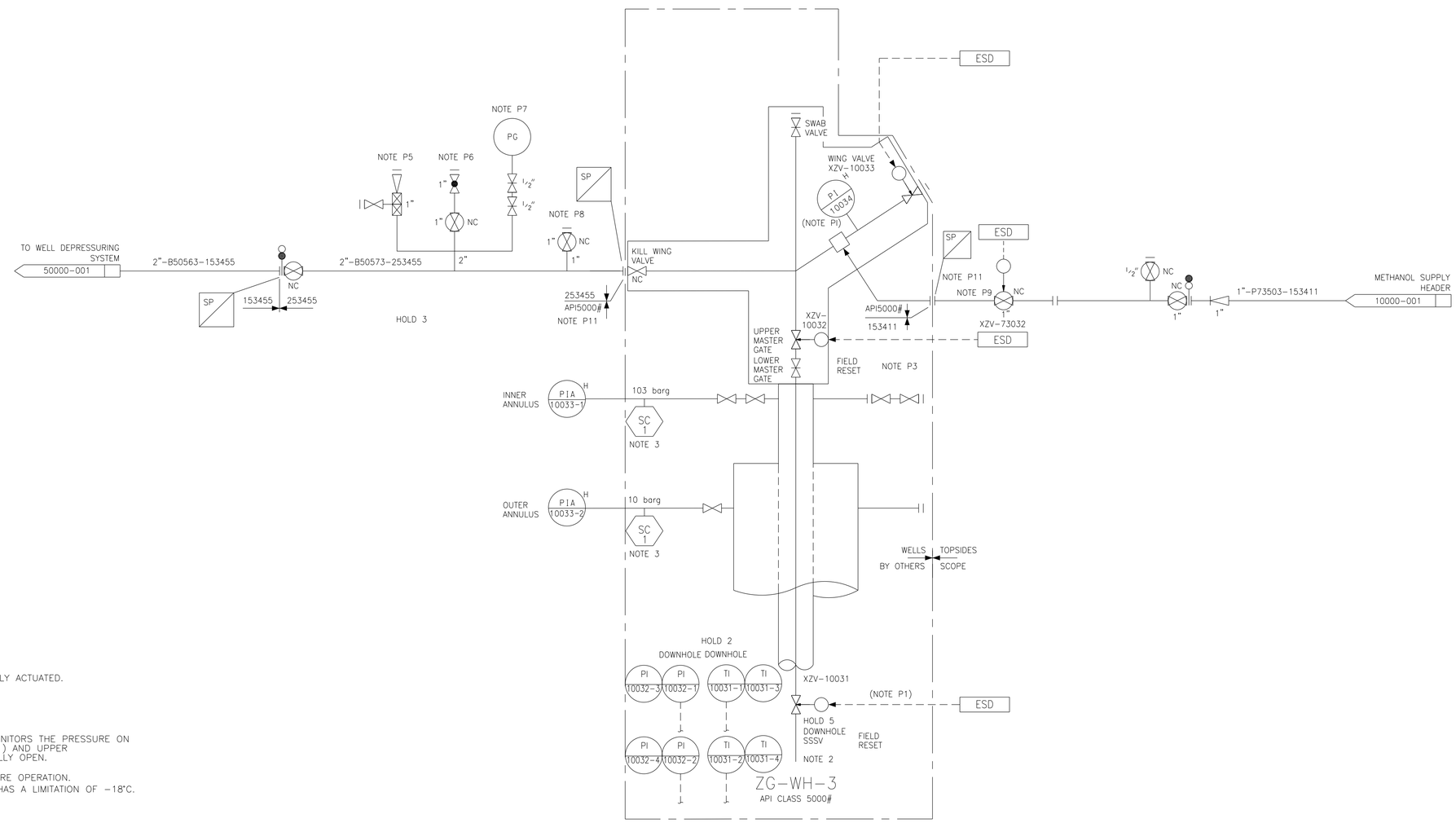

NOTES

1. ALL SHUTDOWN VALVES ARE HYDRAULICALLY ACTUATED.
2. DELETED.
3. TEMPORARY TIE-IN TO VENT COLLECTION HEADER.

PROJECT NOTES

P1. TUBEHEAD PRESSURE INDICATOR (PI-10034) MONITORS THE PRESSURE ON THE WELL. HENCE DOWNHOLE SSSV (XZV-10031) AND UPPER MASTER VALVE (XZV-10032) TO REMAIN NORMALLY OPEN.
P2. DELETED.
P3. NEW XMAS TREE SUITABLE FOR LOW TEMPERATURE OPERATION.
P4. CASING WELLHEAD WILL REMAIN IN PLACE AND HAS A LIMITATION OF -18°C.
P5. N_2 PURGE CONNECTION.
P6. VENT TO SAFE LOCATION.
P7. TEMPORARY PRESSURE GAUGE (NOT TAGGED).
P8. TIE-IN POINT FOR LUBRICATOR VENT.
P9. METHANOL INJECTION TREE ESD VALVE PERMISSIVE REQUIRED FROM WV CLOSED AND UMGV OPEN.
P10. ALL ACTUATED ON/OFF VALVES TO BE FITTED WITH LIMIT SWITCHES.
P11. API FLANGE.

PROJECT HOLDS

1. NEW BLOCK VALVE TAGS TO BE ASSIGNED IN DETAILED ENGINEERING.
2. CLEARED.
3. SCOPE OF SUPPLY (WELLHEAD VENDOR/PROJECT).
4. REQUIREMENT FOR INSULATION PROTECTION OF THE WELLHEADS.
5. CLEARED.

REV	DATE	DRAWN BY	CHKD BY	ENG BY	APPD BY	DESCRIPTION

REVISIONS

DRAWING No.	TITLE
ZG LEGEND SHEET 5	PCCS-04-PTD-PX-2365-00000-005
ZG LEGEND SHEET 4	PCCS-04-PTD-PX-2365-00000-004
ZG LEGEND SHEET 3	PCCS-04-PTD-PX-2365-00000-003
ZG LEGEND SHEET 2	PCCS-04-PTD-PX-2365-00000-002
ZG LEGEND SHEET 1	PCCS-04-PTD-PX-2365-00000-001

REFERENCE DRAWINGS

ATTENTION

PETERHEAD CCS

DRAWING TITLE
PROCESS ENGINEERING FLOW SCHEME
MONITORING WELLHEAD

PCCS-04-PTD-PX-2365-10000-002 REV K01

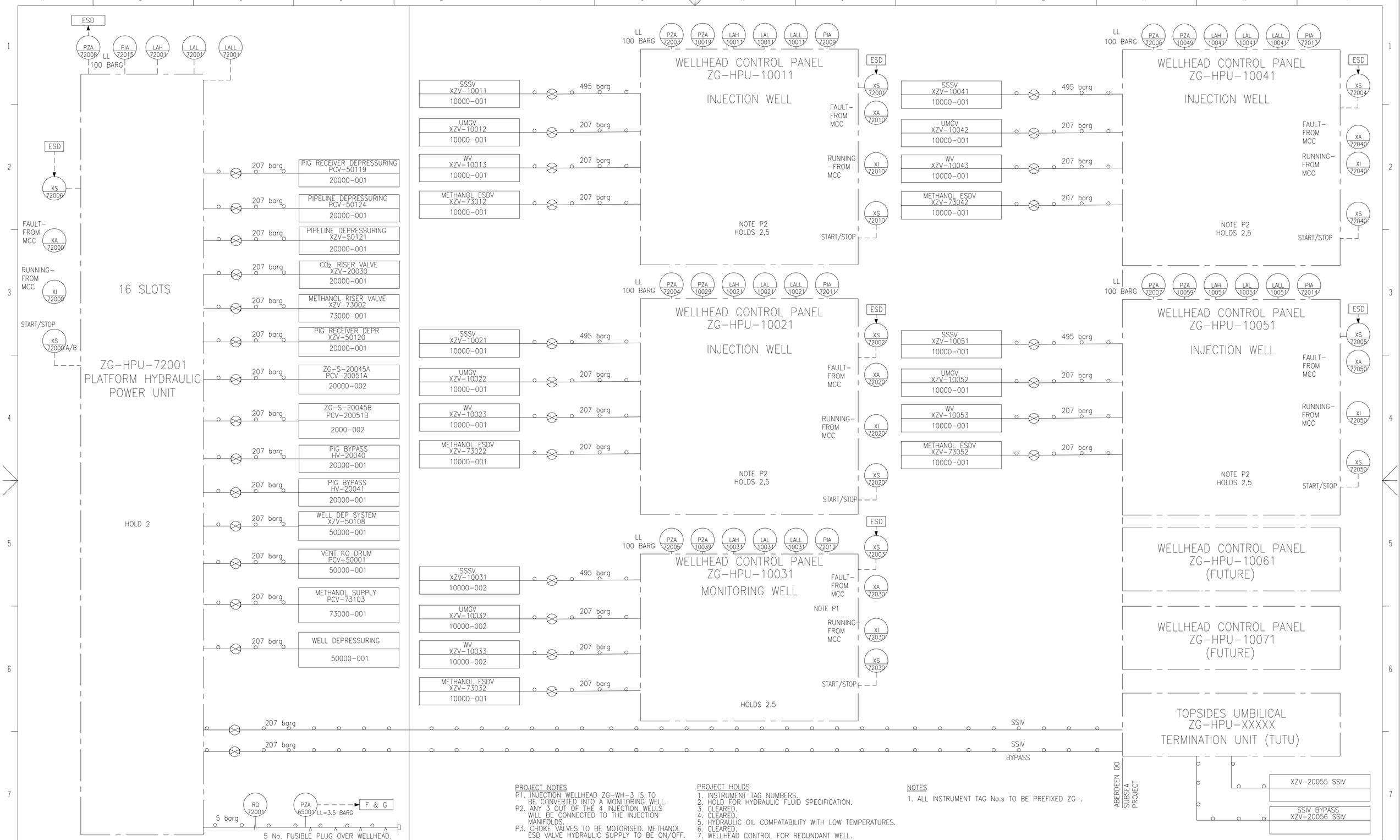

PROJECT NOTES

P1. INJECTION WELLHEAD ZG-WH-3 IS TO BE CONVERTED INTO A MONITORING WELL.
P2. ANY 3 OUT OF THE 4 INJECTION WELLS WILL BE CONNECTED TO THE INJECTION MANIFOLDS.
P3. CHOKE VALVES TO BE MOTORISED. METHANOL ESD VALVE HYDRAULIC SUPPLY TO BE ON/OFF.

PROJECT HOLDS

1. INSTRUMENT TAG NUMBERS.
2. HOLD FOR HYDRAULIC FLUID SPECIFICATION.
3. CLEARED.
4. CLEARED.
5. HYDRAULIC OIL COMPATABILITY WITH LOW TEMPERATURES.
6. CLEARED.
7. WELLHEAD CONTROL FOR REDUNDANT WELL.

NOTES

1. ALL INSTRUMENT TAG No.s TO BE PREFIXED ZG-.

REV	DATE	DRAWN BY	CHKD BY	ENG BY	APPD BY	DESCRIPTION

REVISIONS

DRAWING No.	TITLE
ZG LEGEND SHEET 5	PCCS-04-PTD-PX-2365-00000-005
ZG LEGEND SHEET 4	PCCS-04-PTD-PX-2365-00000-004
ZG LEGEND SHEET 3	PCCS-04-PTD-PX-2365-00000-003
ZG LEGEND SHEET 2	PCCS-04-PTD-PX-2365-00000-002
ZG LEGEND SHEET 1	PCCS-04-PTD-PX-2365-00000-001

REFERENCE DRAWINGS

ATTENTION

PETERHEAD CCS

DRAWING TITLE

UTILITY ENGINEERING FLOW SCHEME
ZG HYDRAULIC POWER STATION

PCCS-04-PTD-PX-2365-10000-003

REV K01

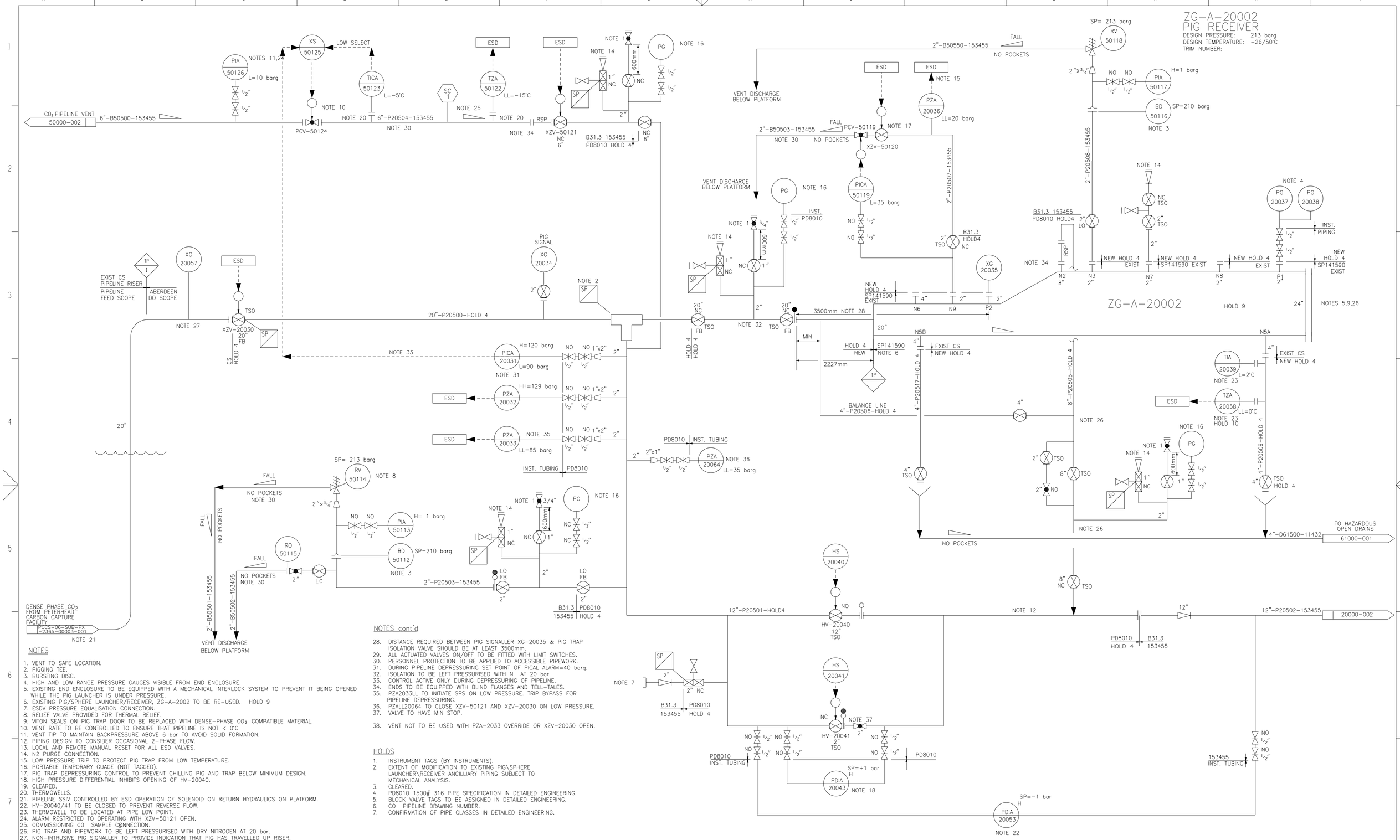

NOTES

1. VENT TO SAFE LOCATION.
2. PIGGING TEE.
3. BURSTING DISC.
4. HIGH AND LOW RANGE PRESSURE GAUGES VISIBLE FROM END ENCLOSURE.
5. EXISTING END ENCLOSURE TO BE EQUIPPED WITH A MECHANICAL INTERLOCK SYSTEM TO PREVENT IT BEING OPENED WHILE THE PIG LAUNCHER IS UNDER PRESSURE.
6. EXISTING PIG/SPHERE LAUNCHER/RECEIVER, ZG-A-2002 TO BE RE-USED. HOLD 9
7. ESDV PRESSURE EQUALISATION CONNECTION.
8. RELIEF VALVE PROVIDED FOR THERMAL RELIEF.
9. VITON SEALS ON PIG TRAP DOOR TO BE REPLACED WITH DENSE-PHASE CO_2 COMPATIBLE MATERIAL.
10. VENT RATE TO BE CONTROLLED TO ENSURE THAT PIPELINE IS NOT < 0°C
11. VENT TIP TO MAINTAIN BACKPRESSURE ABOVE 6 bar TO AVOID SOLID FORMATION.
12. PIPING DESIGN TO CONSIDER OCCASIONAL 2-PHASE FLOW.
13. LOCAL AND REMOTE MANUAL RESET FOR ALL ESD VALVES.
14. N2 PURGE CONNECTION.
15. LOW PRESSURE TRIP TO PROTECT PIG TRAP FROM LOW TEMPERATURE.
16. PORTABLE TEMPORARY GUAGE (NOT TAGGED).
17. PIG TRAP DEPRESSURING CONTROL TO PREVENT CHILLING PIG AND TRAP BELOW MINIMUM DESIGN.
18. HIGH PRESSURE DIFFERENTIAL INHIBITS OPENING OF HV-20040.
19. CLEARED.
20. THERMOWELLS.
21. PIPELINE SSIV CONTROLLED BY ESD OPERATION OF SOLENOID ON RETURN HYDRAULICS ON PLATFORM.
22. HV-20040/41 TO BE CLOSED TO PREVENT REVERSE FLOW.
23. THERMOWELL TO BE LOCATED AT PIPE LOW POINT.
24. ALARM RESTRICTED TO OPERATING WITH XZV-50121 OPEN.
25. COMMISSIONING CO SAMPLE CONNECTION.
26. PIG TRAP AND PIPEWORK TO BE LEFT PRESSURISED WITH DRY NITROGEN AT 20 bar.
27. NON-INTRUSIVE PIG SIGNALLER TO PROVIDE INDICATION THAT PIG HAS TRAVELLED UP RISER.

NOTES cont'd

28. DISTANCE REQUIRED BETWEEN PIG SIGNALLER XG-20035 & PIG TRAP ISOLATION VALVE SHOULD BE AT LEAST 3500mm.
29. ALL ACTUATED VALVES ON/OFF TO BE FITTED WITH LIMIT SWITCHES.
30. PERSONNEL PROTECTION TO BE APPLIED TO ACCESSIBLE PIPEWORK.
31. DURING PIPELINE DEPRESSURING SET POINT OF PICAL ALARM=40 barg.
32. ISOLATION TO BE LEFT PRESSURISED WITH N AT 20 bar.
33. CONTROL ACTIVE ONLY DURING DEPRESSURING OF PIPELINE.
34. ENDS TO BE EQUIPPED WITH BLIND FLANGES AND TELL-TALES.
35. PZA2033LL TO INITIATE SPS ON LOW PRESSURE. TRIP BYPASS FOR PIPELINE DEPRESSURING.
36. PZALL20064 TO CLOSE XZV-50121 AND XZV-20030 ON LOW PRESSURE.
37. VALVE TO HAVE MIN STOP.
38. VENT NOT TO BE USED WITH PZA-2033 OVERRIDE OR XZV-20030 OPEN.

HOLDS

1. INSTRUMENT TAGS (BY INSTRUMENTS).
2. EXTENT OF MODIFICATION TO EXISTING PIG\SPHERE LAUNCHER\RECEIVER ANCILLIARY PIPING SUBJECT TO MECHANICAL ANALYSIS.
3. CLEARED.
4. PD8010 1500# 316 PIPE SPECIFICATION IN DETAILED ENGINEERING.
5. BLOCK VALVE TAGS TO BE ASSIGNED IN DETAILED ENGINEERING.
6. CO PIPELINE DRAWING NUMBER.
7. CONFIRMATION OF PIPE CLASSES IN DETAILED ENGINEERING.

REV	DATE	DRAWN BY	CHKD BY	ENG BY	APPD BY	DESCRIPTION
REVISIONS						

DRAWING No.	TITLE
ZG LEGEND SHEET 5	PCCS-04-PTD-PX-2365-00000-005
ZG LEGEND SHEET 4	PCCS-04-PTD-PX-2365-00000-004
ZG LEGEND SHEET 3	PCCS-04-PTD-PX-2365-00000-003
ZG LEGEND SHEET 2	PCCS-04-PTD-PX-2365-00000-002
ZG LEGEND SHEET 1	PCCS-04-PTD-PX-2365-00000-001
REFERENCE DRAWINGS	

ATTENTION

ALL CONTINUATION NUMBERS WILL BE PRECEDED BY PCCS-04-PTD-PX-2365- UNLESS OTHERWISE STATED

PETERHEAD CCS

DRAWING TITLE

PROCESS ENGINEERING FLOW SCHEME
ZG CO_2 IMPORT SYSTEM
AND PIG RECEIVER

PCCS-04-PTD-PX-2365-20000-001

REV K01

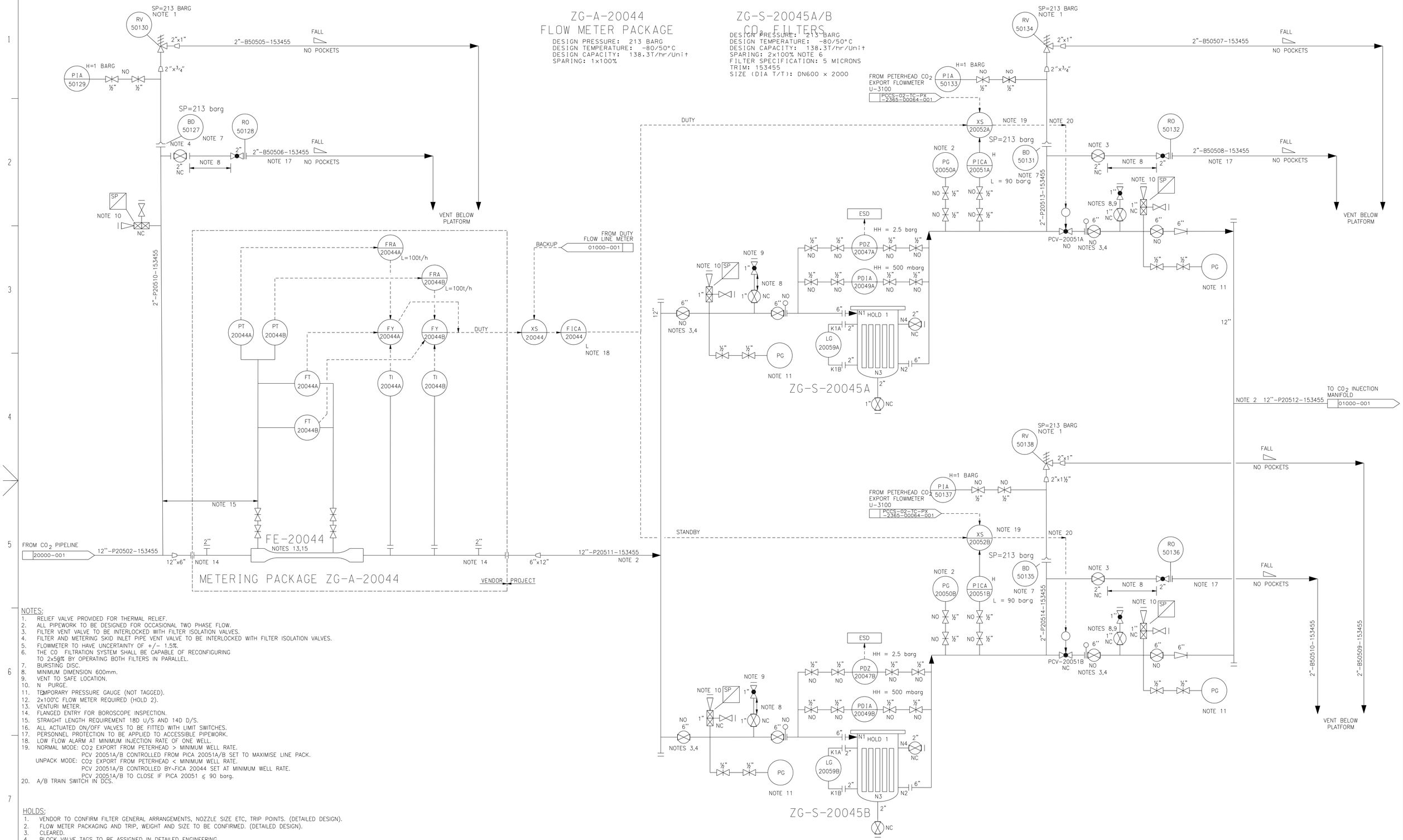

NOTES:

1. RELIEF VALVE PROVIDED FOR THERMAL RELIEF.
2. ALL PIPEWORK TO BE DESIGNED FOR OCCASIONAL TWO PHASE FLOW.
3. FILTER VENT VALVE TO BE INTERLOCKED WITH FILTER ISOLATION VALVES.
4. FILTER AND METERING SKID INLET PIPE VENT VALVE TO BE INTERLOCKED WITH FILTER ISOLATION VALVES.
5. FLOWMETER TO HAVE UNCERTAINTY OF +/- 1.5%.
6. THE CO FILTRATION SYSTEM SHALL BE CAPABLE OF RECONFIGURING TO 2x50% BY OPERATING BOTH FILTERS IN PARALLEL.
7. BURSTING DISC.
8. MINIMUM DIMENSION 600mm.
9. VENT TO SAFE LOCATION.
10. N PURGE.
11. TEMPORARY PRESSURE GAUGE (NOT TAGGED).
12. 2x100% FLOW METER REQUIRED (HOLD 2).
13. VENTURI METER.
14. FLANGED ENTRY FOR BOROSCOPE INSPECTION.
15. STRAIGHT LENGTH REQUIREMENT 18D U/S AND 14D D/S.
16. ALL ACTUATED ON/OFF VALVES TO BE FITTED WITH LIMIT SWITCHES.
17. PERSONNEL PROTECTION TO BE APPLIED TO ACCESSIBLE PIPEWORK.
18. LOW FLOW ALARM AT MINIMUM INJECTION RATE OF ONE WELL.
19. NORMAL MODE: CO_2 EXPORT FROM PETERHEAD > MINIMUM WELL RATE.
    PCV 20051A/B CONTROLLED FROM PICA 20051A/B SET TO MAXIMISE LINE PACK.
    UNPACK MODE: CO_2 EXPORT FROM PETERHEAD < MINIMUM WELL RATE.
    PCV 20051A/B CONTROLLED BY FICA 20044 SET AT MINIMUM WELL RATE.
    PCV 20051A/B TO CLOSE IF PICA 20051 ≤ 90 barg.
20. A/B TRAIN SWITCH IN DCS.

HOLDS:

1. VENDOR TO CONFIRM FILTER GENERAL ARRANGEMENTS, NOZZLE SIZE ETC, TRIP POINTS. (DETAILED DESIGN).
2. FLOW METER PACKAGING AND TRIP, WEIGHT AND SIZE TO BE CONFIRMED. (DETAILED DESIGN).
3. CLEARED.
4. BLOCK VALVE TAGS TO BE ASSIGNED IN DETAILED ENGINEERING.
5. CLEARED.

REV	DATE	DRAWN BY	CHKD BY	ENG BY	APPD BY	DESCRIPTION

REVISIONS

DRAWING No.	TITLE
ZG LEGEND SHEET 5	PCCS-04-PTD-PX-2365-00000-005
ZG LEGEND SHEET 4	PCCS-04-PTD-PX-2365-00000-004
ZG LEGEND SHEET 3	PCCS-04-PTD-PX-2365-00000-003
ZG LEGEND SHEET 2	PCCS-04-PTD-PX-2365-00000-002
ZG LEGEND SHEET 1	PCCS-04-PTD-PX-2365-00000-001

REFERENCE DRAWINGS

ATTENTION

ALL CONTINUATION NUMBERS WILL BE PRECEDED BY PCCS-04-PTD-PX-2365- UNLESS OTHERWISE STATED

PETERHEAD CCS

DRAWING TITLE
PROCESS ENGINEERING FLOW SCHEME
CO_2 FILTERS

PCCS-04-PTD-PX-2365-20000-002

REV K01

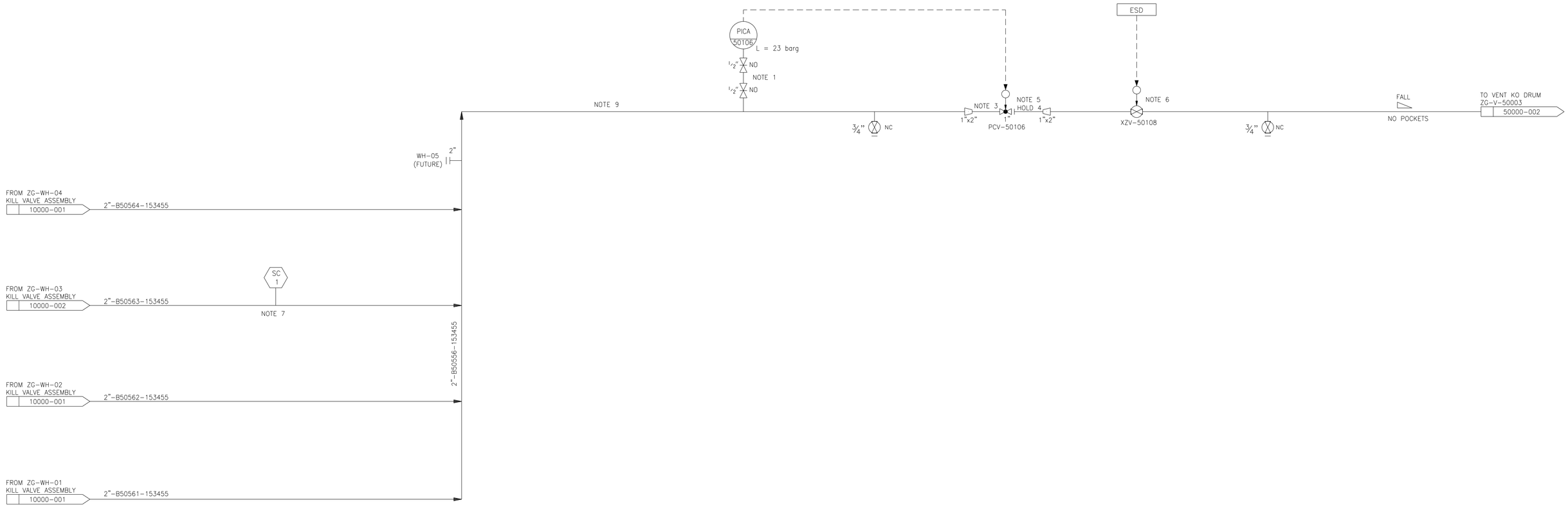

NOTES

1. OPERATOR TO CLOSE GLOBE VALVE WHEN PIA-50106 ANNUNCIATES.
2. WELL BLEED OFF WILL BE POSITIVELY ISOLATED FROM WELLHEAD DURING NORMAL OPERATIONS. ONLY ONE WELL TO BE LINED UP AT ANY TIME.
3. WELL DEPRESSURING VALVE TO BE LOCATED CLOSE TO VENT KO DRUM ZG-V-50003.
4. DELETED.
5. PCV-50106 TRIM SIZE IS SAFETY CRITICAL. TRIM SIZED TO PROTECT WELL FROM LOW TEMPERATURE AND WITHIN CAPACITY OF EXISTING VENT SYSTEM.
6. XZV-50108 TO CLOSE ON HIGH HIGH PRESSURE AND HIGH HIGH LIQUID IN VENT KO DRUM.
7. SAMPLE CONNECTION FOR MONITORING WELL.
8. ALL ACTUATED ON/OFF VALVES TO BE FITTED WITH LIMIT SWITCHES.
9. LOW TEMPERATURE PROTECTION BASED ON SSSV RATED FOR MINIMUM TEMPERATURE POSSIBLE IF PCV-50106 FAILS OPEN.

HOLDS

1. CLEARED.
2. BLOCK VALVE TAGS TO BE ASSIGNED IN DETAILED ENGINEERING.
3. CLEARED.
4. PCV-50106 TRIM SIZE (DETAILED DESIGN).

REV	DATE	DRAWN BY	CHKD BY	ENG BY	APPD BY	DESCRIPTION

REVISIONS

DRAWING No.	TITLE
ZG LEGEND SHEET 5	PCCS-04-PTD-PX-2365-00000-005
ZG LEGEND SHEET 4	PCCS-04-PTD-PX-2365-00000-004
ZG LEGEND SHEET 3	PCCS-04-PTD-PX-2365-00000-003
ZG LEGEND SHEET 2	PCCS-04-PTD-PX-2365-00000-002
ZG LEGEND SHEET 1	PCCS-04-PTD-PX-2365-00000-001

REFERENCE DRAWINGS

ATTENTION

ALL CONTINUATION NUMBERS WILL BE PRECEDED BY PCCS-04-PTD-PX-2365- UNLESS OTHERWISE STATED

PETERHEAD CCS

DRAWING TITLE

UTILITY ENGINEERING FLOW SCHEME
WELL BLEED OFF
MANIFOLD ARRANGEMENT

PCCS-04-PTD-PX-2365-50000-001

REV K01

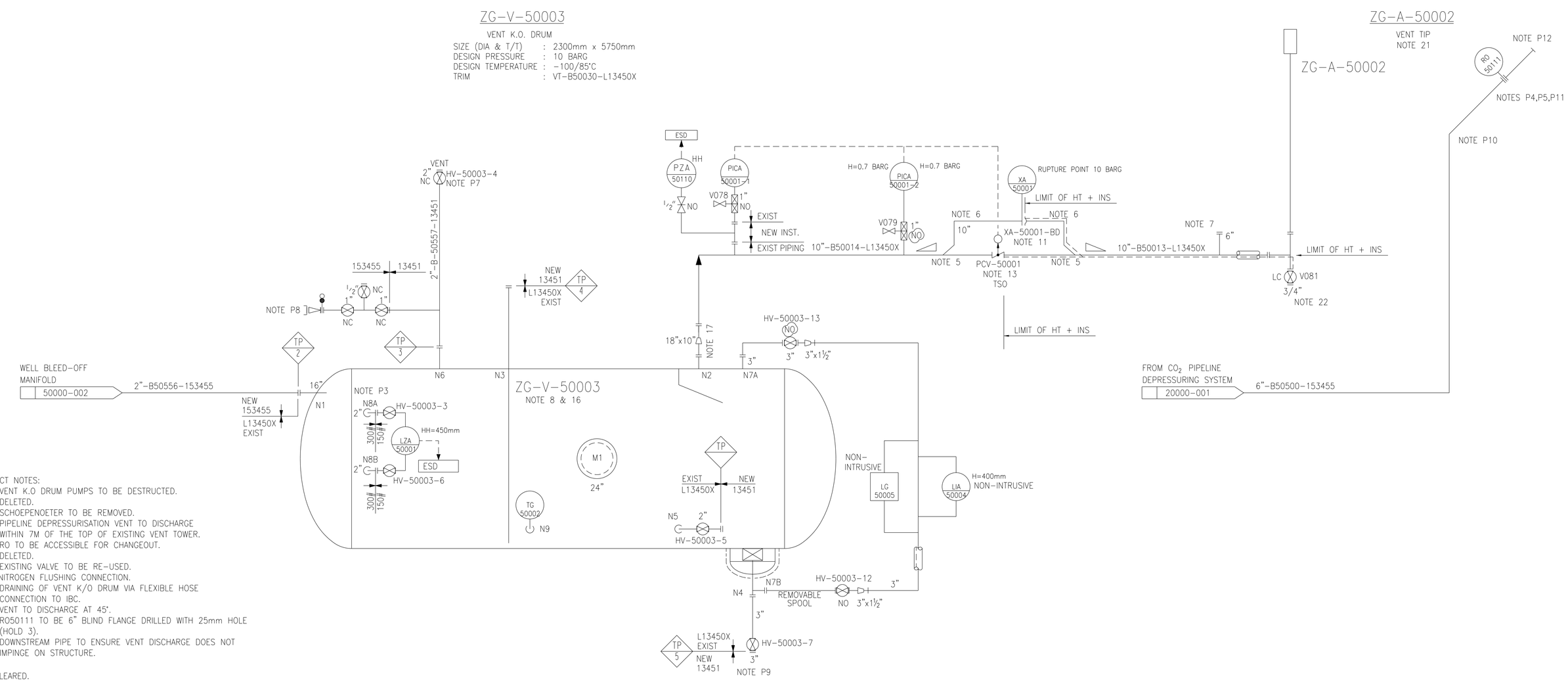

PROJECT NOTES:

P1. VENT K.O DRUM PUMPS TO BE DESTRUCTED.
P2. DELETED.
P3. SCHOEPENOETER TO BE REMOVED.
P4. PIPELINE DEPRESSURISATION VENT TO DISCHARGE WITHIN 7M OF THE TOP OF EXISTING VENT TOWER.
P5. RO TO BE ACCESSIBLE FOR CHANGEOUT.
P6. DELETED.
P7. EXISTING VALVE TO BE RE-USED.
P8. NITROGEN FLUSHING CONNECTION.
P9. DRAINING OF VENT K/O DRUM VIA FLEXIBLE HOSE CONNECTION TO IBC.
P10. VENT TO DISCHARGE AT 45°.
P11. RO50111 TO BE 6" BLIND FLANGE DRILLED WITH 25mm HOLE (HOLD 3).
P12. DOWNSTREAM PIPE TO ENSURE VENT DISCHARGE DOES NOT IMPINGE ON STRUCTURE.

HOLDS:

1-2. CLEARED.
3. CONFIRMATION OF RO SIZE IN DETAILED DESIGN.

NOTES

1. DELETED.
2. PUMP TO BE STARTED AND STOPPED MANUALLY WITH LOW CURRENT TRIP IN MCC
3. DELETED.
4. DELETED.
5. USE SWEPT TEE.
6. USE LONG RADIUS ELBOW.
7. FUTURE VENT TIE IN AT BASE OF VENT STACK.
8. ALL DRAIN DEADLEGS, LEVEL BRIDLES AND IMPULSE LINES TO BE HEAT TRACED AND INSULATED.
9. DELETED.
10. ALL CONTROL AND SHUTDOWN VALVES WILL BE HYDRAULICALLY ACTUATED.
11. LOCATE BURSTING DISC IN VERTICAL PLANE ABOVE PCV.
12. DELETED.
13. VALVE TO BE FAST OPENING ON E.D.P. SIGNAL.
14. DELETED.
15. DELETED.
16. LEVEL ALARM & TRIP SET POINTS GIVEN IN mm ABOVE INTERNAL BASE OF VESSEL.
17. DELETED.
18. DELETED
19. DELETED.
20. DELETED

22. VALVE TO BE LOCKED CLOSED FOLLOWING EACH DRAINING OPERATION.
23. DELETED

REV	DATE	DRAWN BY	CHKD BY	ENG BY	APPD BY	DESCRIPTION

REVISIONS

DRAWING No.	TITLE
ZG LEGEND SHEET 5	PCCS-04-PTD-PX-2365-00000-005
ZG LEGEND SHEET 4	PCCS-04-PTD-PX-2365-00000-004
ZG LEGEND SHEET 3	PCCS-04-PTD-PX-2365-00000-003
ZG LEGEND SHEET 2	PCCS-04-PTD-PX-2365-00000-002
ZG LEGEND SHEET 1	PCCS-04-PTD-PX-2365-00000-001

REFERENCE DRAWINGS

ATTENTION

ALL CONTINUATION NUMBERS WILL BE PRECEDED BY PCCS-04-PTD-PX-2365- UNLESS OTHERWISE STATED

PETERHEAD CCS

DRAWING TITLE

UTILITY ENGINEERING FLOW SCHEME
ZG VENT KNOCKOUT DRUM
V-50003, P-50003, A-50002

PCCS-04-PTD-PX-2365-50000-002

REV K01

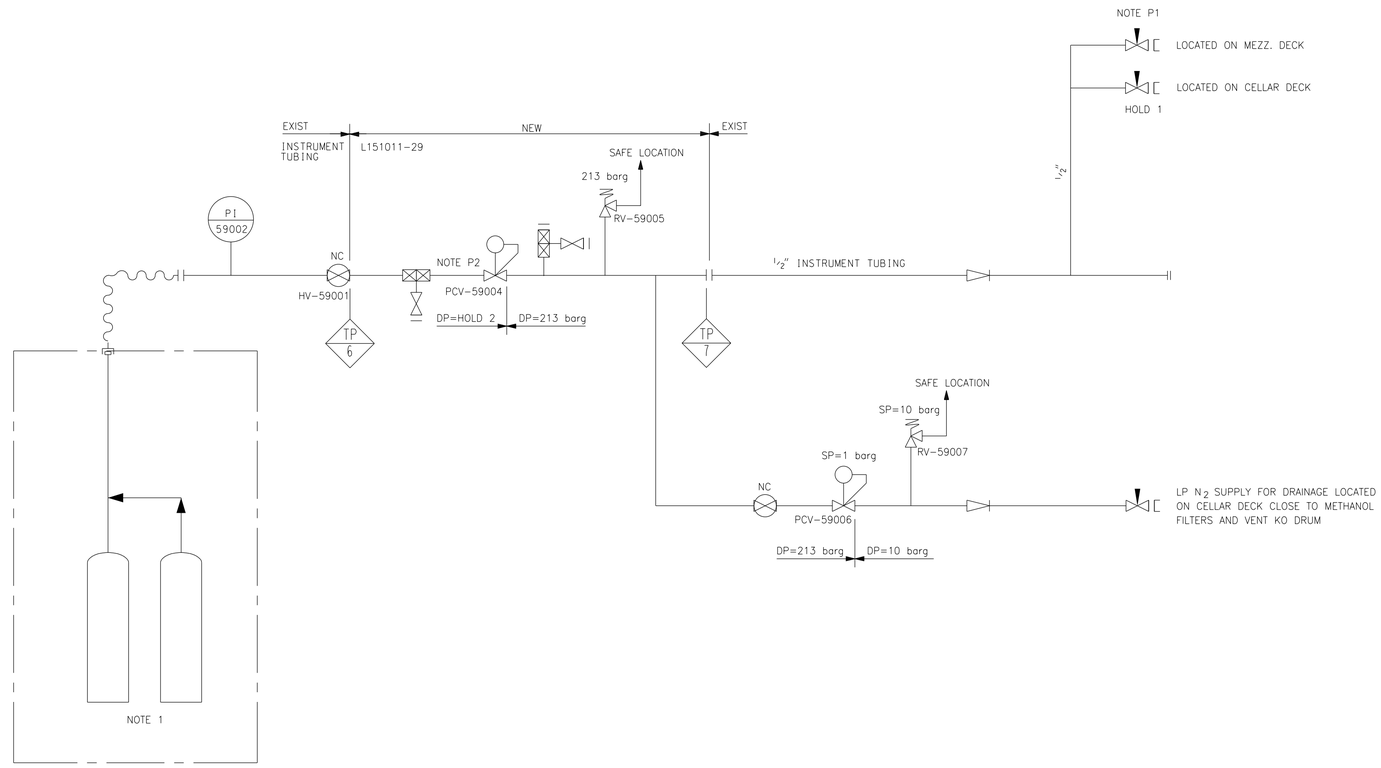

NOTES

1. NITROGEN QUAD, SPARE PROVIDED.

HOLDS

1. LAYOUT OF N_2 SUPPLY STATIONS TO BE CONFIRMED IN DETAILED DESIGN.

PROJECT NOTES

P1. N_2 REQUIRED FOR PURGING DENSE PHASE CO_2 DOUBLE BLOCK AND BLEED VALVE ISOLATION/EQUALISATION, PIG RECEIVER PURGE DRAINING OF THE THE METHANOL AND VENT TO KO DRUM. TEMPORARY CONNECTION FROM HOSE STATIONS.
P2. PRESSURE REGULATOR NORMALLY SET AT 120 barg.
P3. HOSES USED FOR PURGING OPERATIONS SHOULD BE SUITABLE FOR DENSE PHASE CO_2 AND METHANOL SERVICE.
P4. N2 SYSTEM NOT SPECIFIED FOR RISER PRESSURISATION.

REV	DATE	DRAWN BY	CHKD BY	ENG BY	APPD BY	DESCRIPTION

REVISIONS

DRAWING No.	TITLE
ZG LEGEND SHEET 5	PCCS-04-PTD-PX-2365-00000-005
ZG LEGEND SHEET 4	PCCS-04-PTD-PX-2365-00000-004
ZG LEGEND SHEET 3	PCCS-04-PTD-PX-2365-00000-003
ZG LEGEND SHEET 2	PCCS-04-PTD-PX-2365-00000-002
ZG LEGEND SHEET 1	PCCS-04-PTD-PX-2365-00000-001

REFERENCE DRAWINGS

ATTENTION

PETERHEAD CCS

DRAWING TITLE
UTILITY ENGINEERING FLOW SCHEME
ZG NITROGEN SYSTEM

PCCS-04-PTD-PX-2365-59000-001

REV K01

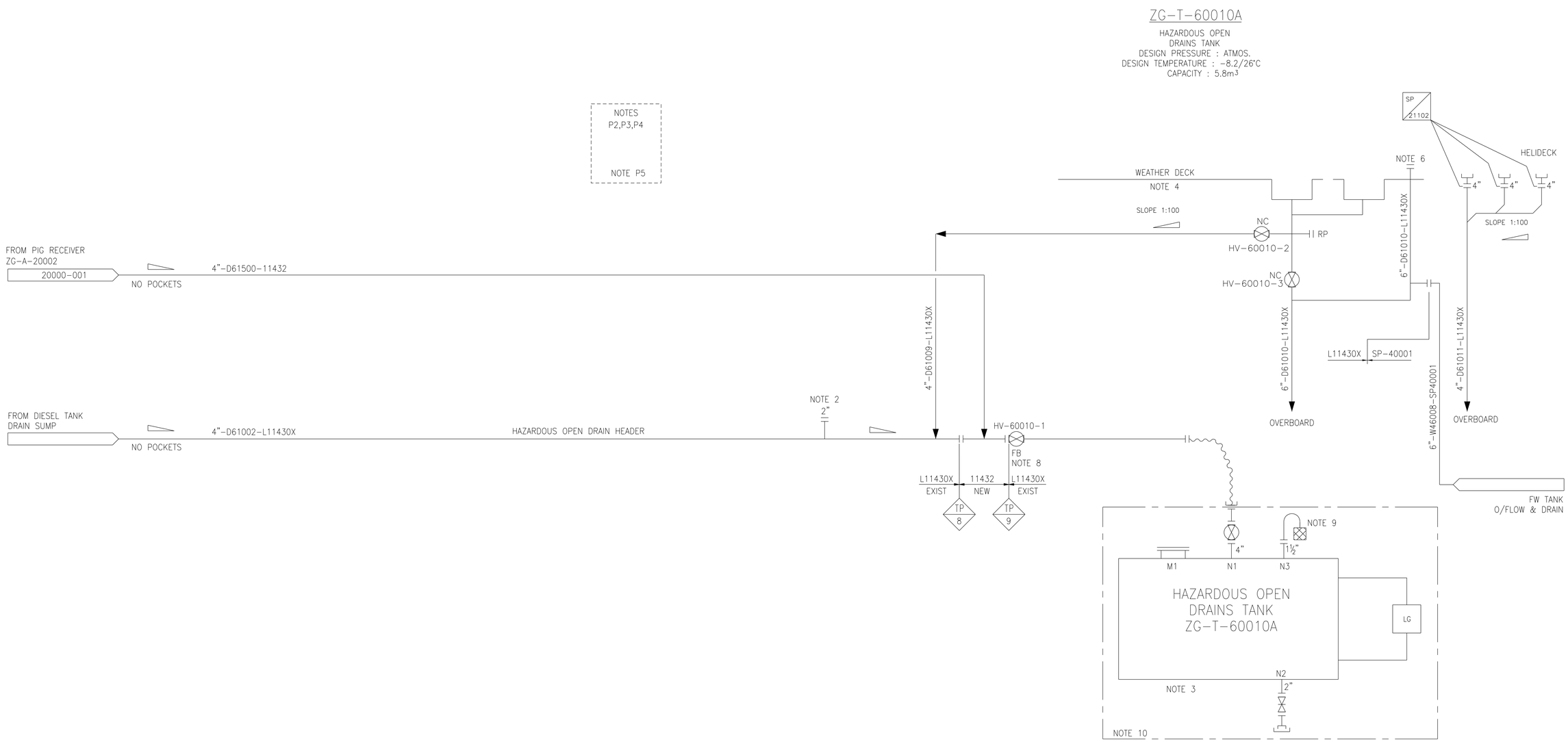

NOTES

1. DRAIN LINES SHALL NOT BE POCKETED.
2. DRAIN CONNECTION FOR WELL WORKOVER/FLOWBACK EQUIPMENT OR PIG LAUNCHER.
3. TOTE TANK TO BE TAKEN ASHORE FOR DRAINAGE DISPOSAL.
4. CONTAMINATED DRAINAGE FROM WELL WORKOVER WASHDOWN TO BE DIRECTED TO HAZARDOUS OPEN DRAIN TANK. CLEAN DRAINAGE TO BE DISCHARGED OVERBOARD BY OPERATOR SELECTION.
5. RODDING OUT POINTS TO BE PROVIDED IN OPEN DRAIN LINES AT CHANGES OF DIRECTION.
6. PRODUCED WATER OVERBOARD CONNECTION FOR WELL WORKOVER WATER TREATMENT. TIE-IN FLANGE TO BE ACCESSIBLE FROM WEATHER DECK.
7. DELETED
8. VALVE CLOSED WHEN PLATFORM UNATTENDED.
9. VENT TO TERMINATE LOCAL TO DRAINS TANK
10. BY TANK SUPPLIER.

PROJECT NOTES

P1. CLOSED DRAIN HEADER TO BE DECOMMISSIONED. NEW CLOSED DRAIN IS NOT REQUIRED.
P2. FLEXIBLE HOSE CONNECTION FROM METHANOL FILTER (ZG-S-73100) AND VENT KO DRUM (ZG-V-50003).
P3. TEMPORARY HOSE TO BE SUITABLE FOR METHANOL SERVICE.
P4. TEMPORARY HOSE CONNECTION TO IBC.
P5. IBC TO BE LOCATED IN LAYDOWN AREA ADJACENT TO ZG-T-60010A.

REV	DATE	DRAWN BY	CHKD BY	ENG BY	APPD BY	DESCRIPTION

REVISIONS

DRAWING No.	TITLE
ZG LEGEND SHEET 5	PCCS-04-PTD-PX-2365-00000-005
ZG LEGEND SHEET 4	PCCS-04-PTD-PX-2365-00000-004
ZG LEGEND SHEET 3	PCCS-04-PTD-PX-2365-00000-003
ZG LEGEND SHEET 2	PCCS-04-PTD-PX-2365-00000-002
ZG LEGEND SHEET 1	PCCS-04-PTD-PX-2365-00000-001

REFERENCE DRAWINGS

ATTENTION

ALL CONTINUATION NUMBERS WILL BE PRECEDED BY PCCS-04-PTD-PX-2365- UNLESS OTHERWISE STATED

PETERHEAD CCS

DRAWING TITLE
UTILITY ENGINEERING FLOW SCHEME
ZG DRAINS SYSTEM, T-60010

PCCS-04-PTD-PX-2365-61000-001

REV K01

ZG-S-73100

METHANOL FILTER
SIZE (DIA x T/T) : 200x1200mm
DESIGN PRESSURE : 240 barg.
DESIGN TEMPERATURE : -8.2°C/45°C
TRIM : 153411
SPARING : 1 x 100%
CAPACITY : 5 m^3/h
SPEC : 5 MICRONS

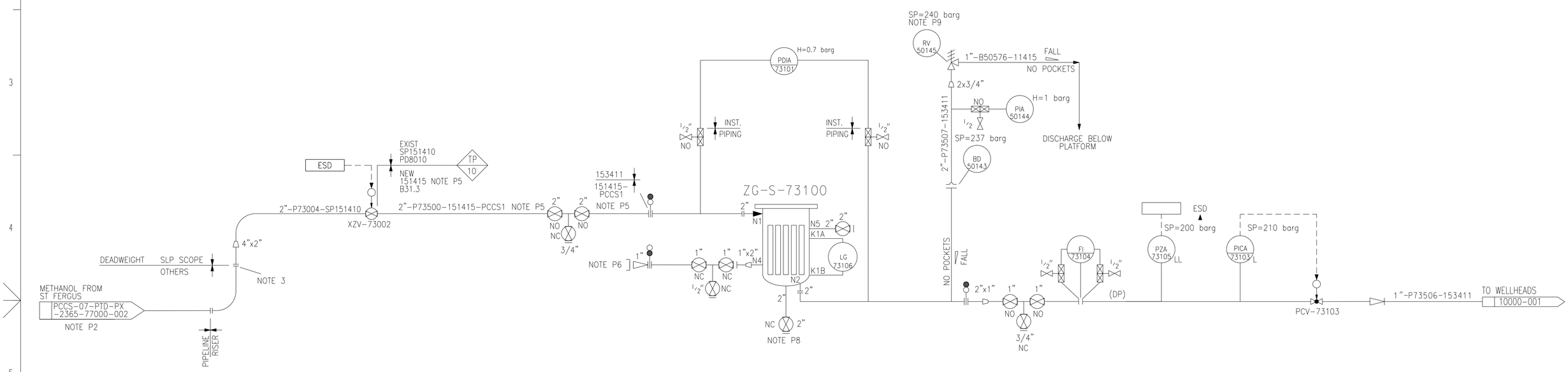

NOTES

1. ALL CONTROL & SHUTDOWN VALVES ARE HYDRAULICALLY OPERATED.
2. DELETED.
3. 2500# RATED FLANGE AT OFFSHORE TIE-IN.

PROJECT NOTES:

P1. DELETED.
P2. METHANOL REQUIRED FOR INJECTION WELL START-UP ONLY.
P3. FILTER TO REMOVE PARTICLES > 5 MICRONS.
P4. ALL NEW AND EXISTING VALVES TO BE COMPATIBLE WITH METHANOL AND DENSE PHASE CO_2 SERVICE.
P5. SPECIAL 151415 PIPE SPECIFICATION TO HAVE SERVICE LIMIT TO ACCOMMODATE MINIMUM DESIGN TEMPERATURE OF -8.2°C
P6. NITROGEN FLUSHING CONNECTION.
P7. ALL ACTUATED ON/OFF VALVES TO BE FITTED WITH LIMIT SWITCHES.
P8. TEMPORARY HOSE CONNECTION TO BE IBC, TO BE SUITABLE FOR METHANOL SERVICE.
P9. THERMAL RELIEF. VERY SMALL VOLUME OF METHANOL DISCHARGED.

HOLDS

1. VENDOR DETAILS.
2. NEW BLOCK VALVE TAGS TO BE ASSIGNED IN DETAILED ENGINEERING.

REV	DATE	DRAWN BY	CHKD BY	ENG BY	APPD BY	DESCRIPTION

REVISIONS

DRAWING No.	TITLE
ZG LEGEND SHEET 5	PCCS-04-PTD-PX-2365-00000-005
ZG LEGEND SHEET 4	PCCS-04-PTD-PX-2365-00000-004
ZG LEGEND SHEET 3	PCCS-04-PTD-PX-2365-00000-003
ZG LEGEND SHEET 2	PCCS-04-PTD-PX-2365-00000-002
ZG LEGEND SHEET 1	PCCS-04-PTD-PX-2365-00000-001

REFERENCE DRAWINGS

ATTENTION

ALL CONTINUATION NUMBERS WILL BE PRECEDED BY PCCS-04-PTD-PX-2365- UNLESS OTHERWISE STATED

PETERHEAD CCS

DRAWING TITLE

UTILITY ENGINEERING FLOW SCHEME
ZG METHANOL INJECTION SYSTEM
FOR CCS PROJECT

PCCS-04-PTD-PX-2365-73000-001

REV K01

STREAM DESCRIPTION		CO_2 BASE OF GOLDENEYE RISER	CO_2 ARRIVING OFFSHORE GOLDENEYE TOPSIDES	CO_2 IN INJECTION MANIFOLD	CO_2 TO A SINGLE INJECTION WELL UPSTREAM CHOKE	CO_2 DOWNSTREAM CHOKE VALVE	CO_2 DOWNSTREAM CHOKE VALVE	CO_2 DOWNSTREAM CHOKE VALVE	CO_2 DOWNSTREAM CHOKE VALVE
PFD STREAM NUMBER		1	2	3	4	5	5	5	5
OVERALL						NORMAL CASE	DESIGN CASE	EARLY LIFE TURNDOWN CASE (Note 5)	LATE LIFE TURNDOWN CASE (Note 5)
Vapour Fraction		0.0	0.0	0.0	0.0	0.0	0.0	0.0	0.0
Temperature	°C	4–12	2.3–10.1	2.2	2.2	0.87	2.0	0.87	0.87
Pressure	bara	105.2–130.4	91–116.2 (Note 4)	90–115	90–115	50	115	50	50
Mass Flow Normal/Design	kg/h	130294/137050	130294/137050	130294/137050	130294/137050	130294	137050	102788	89342
Molecular Weight	kg/kgmol	44.0	44.0	44.0	44.0	44.0	44.0	44.0	44.0
Mass Density	kg/m^3	976	971.9	973	973	947	990.4	941.7	941.7
Mass Heat Capacity, CP	kJ/(kg°C)	2.10	2.15	2.16	2.16	2.331	2.131	2.331	2.331
Viscosity	cP	0.11	0.11	0.11	0.11	0.11	0.11	0.11	0.11
Thermal Conductivity	W/(mK)	0.091	0.091	0.091	0.091	0.092	0.091	0.092	0.092
Mass Enthalpy (Note 2)	kJ/kg	203	200	200	200	200	200	200	200
CO_2 (Molar)	%	⩾99	⩾99	⩾99	⩾99	⩾99	⩾99	⩾99	⩾99
H_2O (Molar)	ppm	⩽50	⩽50	⩽50	⩽50	⩽50	⩽50	⩽50	⩽50
O_2 (Molar)	ppm	⩽1	⩽1	⩽1	⩽1	⩽1	⩽1	⩽1	⩽1
Total Volatile Compounds (N_2+H_2+CH_2+Ar) (MOLAR)	%	⩽1	⩽1	⩽1	⩽1	⩽1	⩽1	⩽1	⩽1
H_2 (Molar)	%	⩽0.03	⩽0.03	⩽0.03	⩽0.03	⩽0.03	⩽0.03	⩽0.03	⩽0.03
CO (Molar)	ppm	⩽10	⩽10	⩽10	⩽10	⩽10	⩽10	⩽10	⩽10
NOX (Molar)	ppm	⩽10	⩽10	⩽10	⩽10	⩽10	⩽10	⩽10	⩽10
SOX (Molar)	ppm	⩽10	⩽10	⩽10	⩽10	⩽10	⩽10	⩽10	⩽10

REFERENCE DRAWINGS.	DRAWING No.

NOTES:

1. DESIGN TO CONTROL FLOW BETWEEN MINIMUM SINGLE WELL INJECTION RATE (MSWIR) AND MAXIMUM EXPORT.
2. REFERENCE STATE U=0 AT 273.16K FOR SATURATED LIQUID.
3. PHYSICAL PROPERTIES FOR PURE CO_2 DERIVED FROM NIST WEBSITE: http://webbook.nist.gov.gov/cgi/
4. LOWER LIMIT TO PROVIDE LINE PACK DRAWDOWN. UPPER LIMIT IS NORMAL ARRIVAL PRESSURE.
5. FOR THE FIRST 5 YEARS OF INJECTION THE TURNDOWN CASE WILL BE APPROXIMATELY 75% OF THE MAXIMUM DESIGN RATE. FOR THE REMAINDER OF PROJECT LIFE, THE TURNDOWN CASE WILL BE APPROXIMATELY 65% OF MAXIMUM DESIGN RATE,

HOLDS:

1. VOLATILE CONCENTRATION LIMITS TO AVOID RISK OF RUNNING DUCTILE FRACTURE.
2. TRANSPORTATION SPECIFICATION LIMITS.

REV	DATE	DESCRIPTION	DRAWN	CHK or TECH REP	DES ENG.	APP'D

SIPC Projects & Technology Upstream Major Projects - EMEA

OFFSHORE PROCESS FLOW SCHEME
GOLDENEYE FLOWS, COMPOSITIONS AND OPERATING CONDITIONS

DRG No. PCCS-04-PTD-PX-2366-00001-001

REV. K01

ZG-A-20002 PIG RECEIVER	
DESIGN PRESSURE	213 barg
DESIGN TEMPERATURE	-26/50°C
SIZE (DIA x T/T)	
MAJOR BARREL	600mm NB x 5100mm
MINOR BARREL	500mm NB x2550mm
MATERIAL	CS

ZG-S-20045A/B CO_2 FILTER	NOTE 11
CAPACITY	137.0 t/h
DUTY	2X100%
DESIGN PRESSURE	213 barg
DESIGN TEMPERATURE	-80/50°C
FILTER SPECIFICATION	5 MICRONS
MATERIAL	316SS
I.D.	730 mm
LENGTH	1610 mm

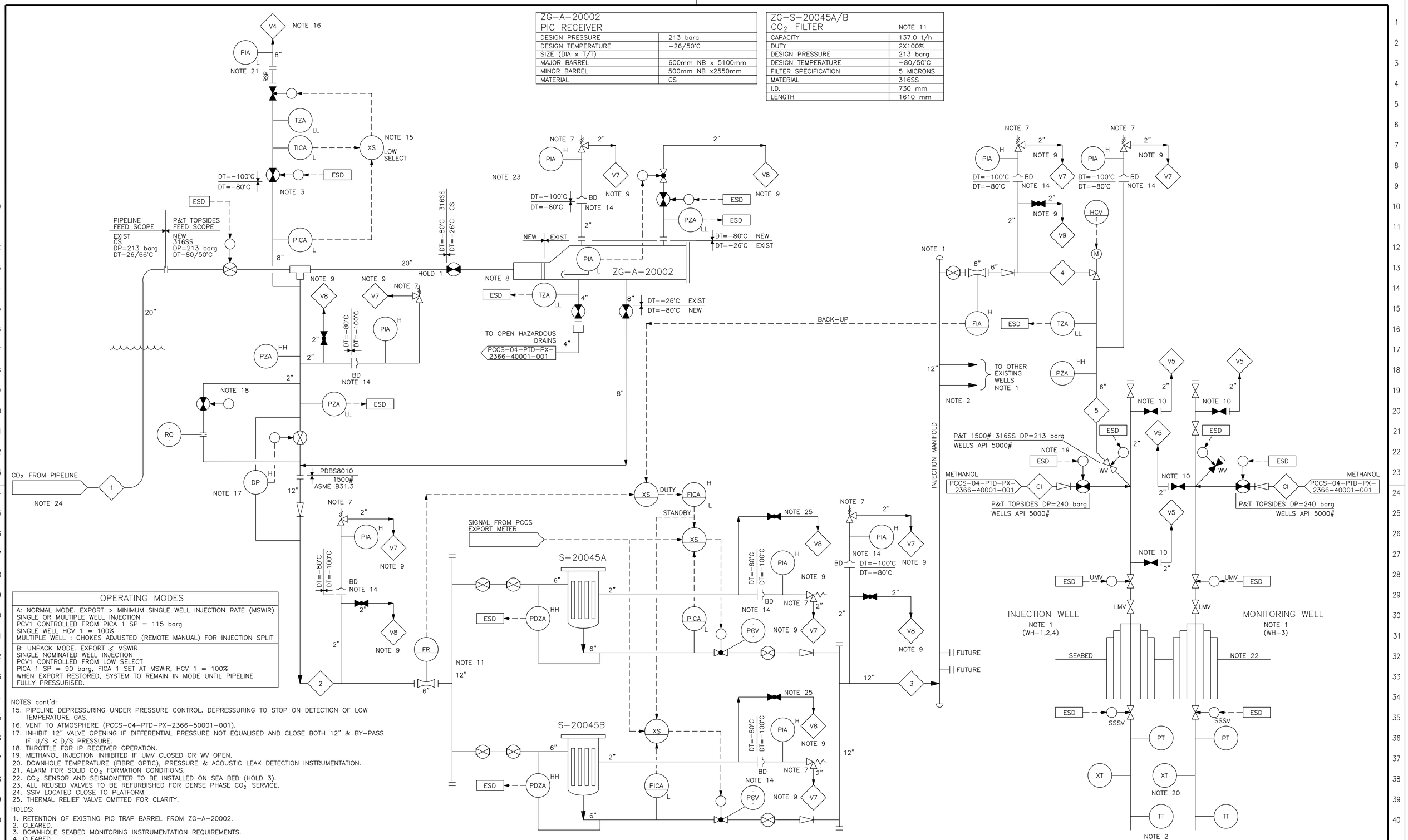

OPERATING MODES
A: NORMAL MODE. EXPORT > MINIMUM SINGLE WELL INJECTION RATE (MSWIR) SINGLE OR MULTIPLE WELL INJECTION PCV1 CONTROLLED FROM PICA 1 SP = 115 barg SINGLE WELL HCV 1 = 100% MULTIPLE WELL : CHOKES ADJUSTED (REMOTE MANUAL) FOR INJECTION SPLIT
B: UNPACK MODE. EXPORT ≤ MSWIR SINGLE NOMINATED WELL INJECTION PCV1 CONTROLLED FROM LOW SELECT PICA 1 SP = 90 barg, FICA 1 SET AT MSWIR, HCV 1 = 100% WHEN EXPORT RESTORED, SYSTEM TO REMAIN IN MODE UNTIL PIPELINE FULLY PRESSURISED.

NOTES cont'd:

15. PIPELINE DEPRESSURING UNDER PRESSURE CONTROL. DEPRESSURING TO STOP ON DETECTION OF LOW TEMPERATURE GAS.
16. VENT TO ATMOSPHERE (PCCS-04-PTD-PX-2366-50001-001).
17. INHIBIT 12" VALVE OPENING IF DIFFERENTIAL PRESSURE NOT EQUALISED AND CLOSE BOTH 12" & BY-PASS IF U/S < D/S PRESSURE.
18. THROTTLE FOR IP RECEIVER OPERATION.
19. METHANOL INJECTION INHIBITED IF UMV CLOSED OR WV OPEN.
20. DOWNHOLE TEMPERATURE (FIBRE OPTIC), PRESSURE & ACOUSTIC LEAK DETECTION INSTRUMENTATION.
21. ALARM FOR SOLID CO_2 FORMATION CONDITIONS.
22. CO_2 SENSOR AND SEISMOMETER TO BE INSTALLED ON SEA BED (HOLD 3).
23. ALL REUSED VALVES TO BE REFURBISHED FOR DENSE PHASE CO_2 SERVICE.
24. SSIV LOCATED CLOSE TO PLATFORM.
25. THERMAL RELIEF VALVE OMITTED FOR CLARITY.

HOLDS:

1. RETENTION OF EXISTING PIG TRAP BARREL FROM ZG-A-20002.
2. CLEARED.
3. DOWNHOLE SEABED MONITORING INSTRUMENTATION REQUIREMENTS.
4. CLEARED.

REFERENCE DRAWINGS.	DRAWING No.

NOTES:

1. FOUR PRODUCTION WELLS TO BE CONVERTED TO INJECTION/MONITORING WELLS.
2. DRAWING DEPICTS ONE WELL AND FLOWLINE AND IS TYPICAL FOR ALL 3 INJECTION WELLS.
3. PIPELINE DEPRESSURISATION FACILITY INHIBITED WHEN HELICOPTER OPERATIONS ARE ONGOING.
5. EMERGENCY DEPRESSURING NOT REQUIRED.
6. BACK PRESSURE CONTROLLER TO ENSURE DENSE PHASE IS MAINTAINED IN THE PIPELINE, P ≥ 90 barg
7. THERMAL RELIEF VALVE.
8. PIG RECEIVER DESIGNED FOR INTELLIGENT PIGS.
9. VENT BELOW PLATFORM. (PFS PCCS-04-PTD-PX-2366-50001-001)
10. KILL WING VALVE USED TO VENT VIA WELL VENT SYSTEM (PCCS-04-PTD-PX-2366-50001-001).
11. 2x100% FILTERS TO BE DESIGNED TO OPERATE AS 2x50% TO ACCOMMODATE FUTURE EXPANSION.
12. DELETED.
13. REFER TO OPERATING MODES.
14. BD - BURSTING DISC.

REV	DATE	DESCRIPTION	DRAWN	CHK or TECH REF	DES ENG.	APP'D

SIPC Projects & Technology Upstream Major Projects - EMEA

OFFSHORE PROCESS FLOW SCHEME
SHELL GOLDENEYE TOPSIDES
FACILITIES FOR CARBON STORAGE

DRG No. PCCS-04-PTD-PX-2366-01001-001

REV. K01

EQUIPMENT	ZG-T-46010 FRESH WATER STORAGE TANK
DIA x H mm	3000 X 1850
CAPACITY (NET)	12 m^3

EQUIPMENT	ZG-T-54001 DIESEL STORAGE TANK
I.D. x H mm	2600 X 10500
CAPACITY (NET)	33m^3

EQUIPMENT	ZG-G-80002 ZG-G-80003 ZG-G-80004 DIESEL POWER GENERATORS
L x W x H mm	3350 X 1600 X 2750

EQUIPMENT	ZG-S-73100 FILTERS
CAPACITY	5m^3/h
DUTY	2x100%
DESIGN PRESSURE	240 barg
DESIGN TEMPERATURE	-8.2/45°C
FILTER SPECIFICATION	5 MICRONS
L x W	324 x 1750mm

EQUIPMENT	ZG-T-60010A HAZARDOUS OPEN DRAINS TANK
L x W x H mm	2030x2030x1440
CAPACITY (NET)	3.2 m^3

EQUIPMENT	ZG-HPU-72001 HYDRAULIC POWER UNIT	ZG-HPU-10011 TO 10051 HYDRAULIC POWER UNIT
L x W x H mm	2500 X 1200 X 2500	800 X 800 X 1770
	29-HPU-HOLD 5 SSIV-HPU- HOLD 5	
L x W x H mm	HOLD	

EQUIPMENT	ZG-P-54003 DIESEL TRANSFER PUMP
DESIGN PRESSURE	5 barg
DESIGN TEMPERATURE	-8.2/45°C
CAPACITY	20l/min

STREAM NUMBER			31	32	33	34	35	36	37	38
STREAM NAME			DIESEL TANK OUTLET	POWER UNIT SUPPLY	POWER UNIT SUPPLY	POWER UNIT SUPPLY	HYDRATE INHIBITOR SUPPLY	HYDRATE INHIBITOR WELL INJECTION	FRESH WATER TANK OUTLET	N2 SUPPLY
TEMPERATURE		°C	0/24.5	0/24.5	0/24.5	0/24.5	4/11	4/11	0/24.5	AMB
PRESSURE		barg	1.04/1.7	1.04/1.7	1.04/1.7	1.04/1.7	214	214	1.04/2.2	7
GAS	VOLUME RATE	am^3/h	–	–	–	–	–	–	–	TBA
	MASS RATE	kg/h	–	–	–	–	–	–	–	–
	MW		–	–	–	–	–	–	–	–
LIQUID	VOLUME RATE	am^3/h	0.03	0.015	0.015	0.015	HOLD 1	–	0	–
	MASS RATE	kg/h	25.5	12.75	12.75	12.75	HOLD 1	–	0	–
	MW		–	–	–	–	–	–	–	28

EQUIPMENT	ZG-A-54001 DIESEL COALESCER PACKAGE HOLD 8
MASS RATE	25.5 kg/h
DESIGN PRESSURE	3.5 barg
DESIGN TEMPERATURE	-8.2/45°C

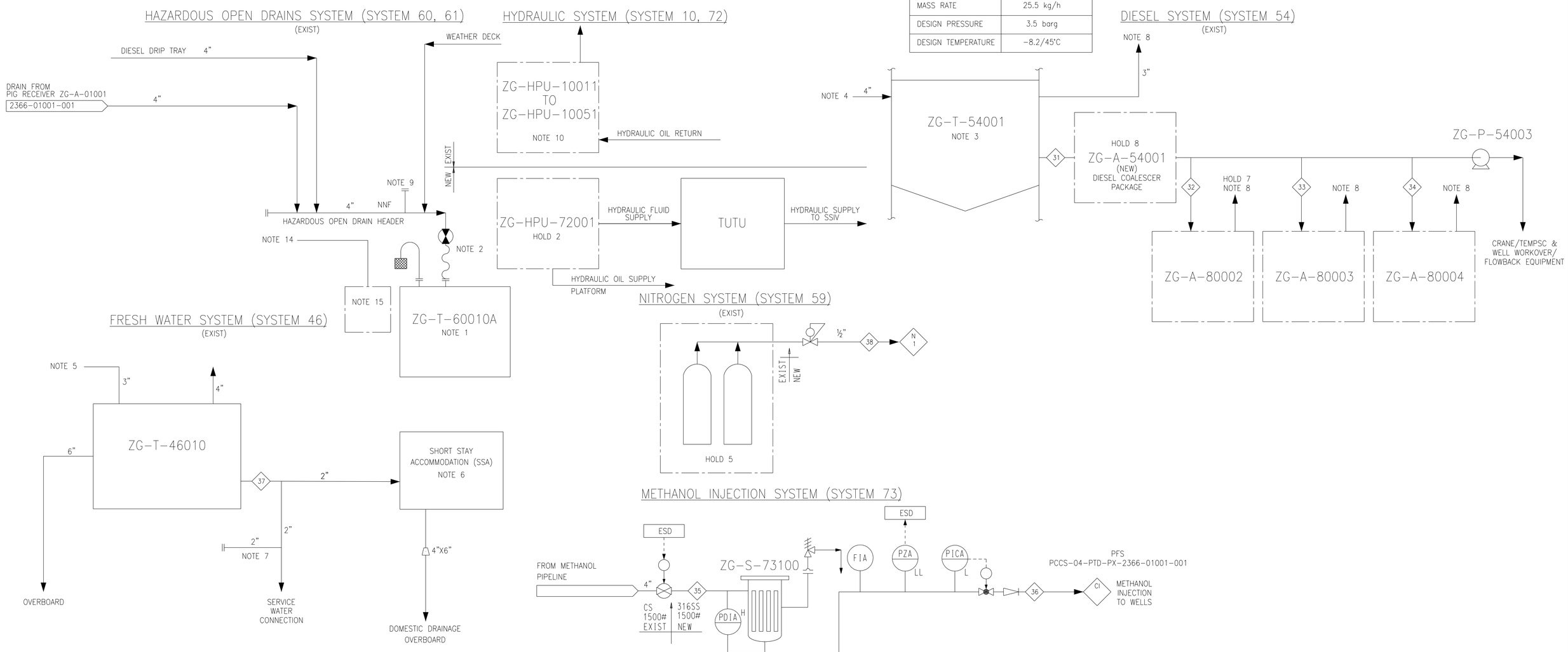

HOLDS
1-7. CLEARED.
8. REQUIREMENT FOR DIESEL COALESCER.

NOTES Contd:
14. TRANSFER OF FLUIDS FROM VENT KO DRUM (ZG-V-50003) AND METHANOL FILTERS (ZG-S-73100) BY FLEXIBLE HOSE CONNECTION.
15. TEMPORARY IBC TO BE LOCATED IN LANDING AREA CLOSE TO EXISTING OPEN DRAINS TANK DURING TRANSFER OPERATIONS.

REFERENCE DRAWINGS.	DRAWING No.

NOTES:
1. TEMPORARY TOTE TANK FOR MANUALLY OPERATED DRAINAGE. CONTENTS DECANTED INTO TEMPORARY TANK/IBC FOR DISPOSAL OFFSHORE.
2. VALVE NORMALLY CLOSED. MANUALLY OPENED ONLY WHEN TOTE TANK IS CONNECTED.
3. DIESEL STORAGE TANK DESIGNED TO PROVIDE SUFFICIENT CAPACITY FOR 3 MONTHS OPERATION OF 1 x 100% DIESEL GENERATOR AT 80 kW LOAD. FEED TO GENERATORS IS BY GRAVITY. DIESEL IS STORED IN CRANE PEDESTAL.
4. CLEAN DIESEL SUPPLIED DIRECT FROM SUPPLY SHIP BY HOSE TRANSFER.
5. FRESH WATER SUPPLIED DIRECT FROM SUPPLY SHIP BY HOSE TRANSFER.
6. FRESH WATER IS NOT SUITABLE FOR DRINKING. DRINKING WATER TO BE BROUGHT FROM ONSHORE IN BOTTLES.
7. FRESH WATER CONNECTION TO PRODUCTION SEPARATOR TO BE DECOMMISSIONED.
8. EXHAUST TO SAFE LOCATION.
9. SPARE DRAINS CONNECTION.
10. HYDRAULIC POWER SYSTEM WILL COMPRISE 4 INDIVIDUAL WELLHEAD UNITS PLUS 1 PLATFORM UNIT. (EXIST) +1 (NEW).
11. DELETED.
12. DELETED.
13. DELETED.

REV	DATE	DESCRIPTION	DRAWN	CHK or TECH REP	DES ENG.	APP'D

SIPC Projects & Technology Upstream Major Projects - EMEA

OFFSHORE UTILITY FLOW SCHEME
GOLDENEYE STORAGE GENERAL UTILITIES
FOR CARBON STORAGE

DRG No. PCCS-04-PTD-PX-2366-40001-001
REV. K01

THIS DOCUMENT ORIGINATED IN
THIS DOCUMENT HAS AN ECCN OF

(HOLD 1)

STREAM NUMBER		20	21	22	23	24
STREAM NAME		TOPSIDES THERMAL RELIEF (TYP)	TOPSIDES DEPRESSURING (TYP)	PIPELINE DEPRESSURING MAX RATE	PIPELINE DEPRESSURING BOIL OFF RATE	FLOWLINE VENT PIPELINE PRESSURISATION MODE
OPERATING TEMPERATURE	°C	−78	−78	0	0	11°C
OPERATING PRESSURE	barg	1.1	1.1	105 (MAX)	10 (NOTE 3)	20−30
GAS MASS RATE	kg/s	0.125	10.5	4.1	10	2.6
MW		44	44	44	44	28

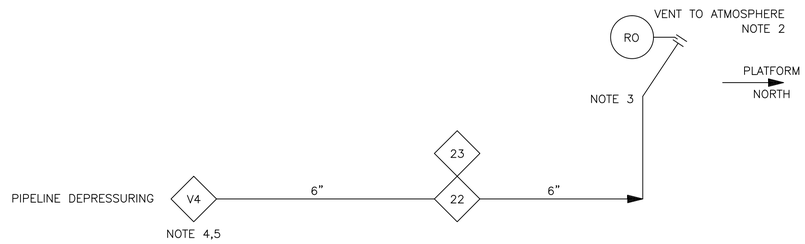

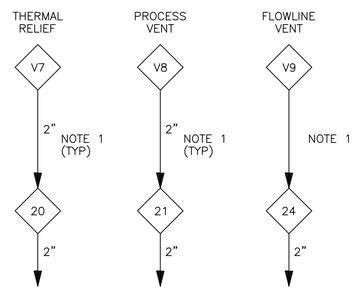

REFERENCE DRAWINGS.	DRAWING No.

NOTES:
1. THERMAL RELIEF AND TOPSIDES VENTS TO BE ROUTED BELOW PLATFORM. DISCHARGE TO AVOID IMPINGEMENT ON STRUCTURAL MEMBERS.
2. VENT TO BE LOCATED ABOVE EL.+50000.
3. VENT TIP TO MAINTAIN CO_2 PRESSURE ABOVE CO_2 TRIPLE POINT DURING BOIL OFF PHASE OF PIPELINE DEPRESSURING.
4. PCCS−04−PTD−PX−2366−01001−001.
5. CO_2 VENT SYSTEM IS NEW.

HOLDS:
1. MASS BALANCE ON HOLD AWAITING CONFIRMATION OF THERMAL RELIEF RATES, VENT RATE AND PIPELINE DEPRESSURISATION RATES.
2. CALCULATIONS FROM UPDATED DISPERSION MODELS.
3. STREAM CONDITIONS FOR PIPELINE COMMISSIONING.

REV	DATE	DESCRIPTION	DRAWN	CHK or TECH REF	DES ENG.	APP'D

SIPC Projects & Technology
Upstream Major Projects - EMEA

OFFSHORE UTILITY FLOW SCHEME
GOLDENEYE CO_2 VENTING SYSTEMS

DRG No. PCCS−04−PTD−PX−2366−50001−001
REV. K01

THIS DOCUMENT ORIGINATED IN U.K.
THIS DOCUMENT HAS AN ECCN OF EAR99

STREAM NUMBER	25	26
STREAM NAME	WELL DEPRESSURISING MANIFOLD	WELL DEPRESSURISING MANIFOLD
TEMPERATURE	0°C	−75°C
PRESSURE barg	0−120	1
COMPOSITION	NOTE 2	CO_2 100%
MASS RATE kg/m (NOTE3)	2000	2000
MW	44	44

VENT K.O DRUM ZG−V−50003	
I.D. x TAN/TAN	2300mm X 5750mm
TOTAL VOLUME	27m³
DESIGN TEMPERATURE	−100°C/85°C
DESIGN PRESSURE	10 barg/FV
OPERATING TEMPERATURE	AMB/−85°C
OPERATING PRESSURE	0.7 barg

VENT TIP ZG−A−50002	HOLD 1
CAPACITY	94,890 kg/hr (NOTE 7)
BACK PRESSURE	5 barg AT MAXIMUM RATE
DESIGN RATE (HOLD 3) .	2000 kg/h

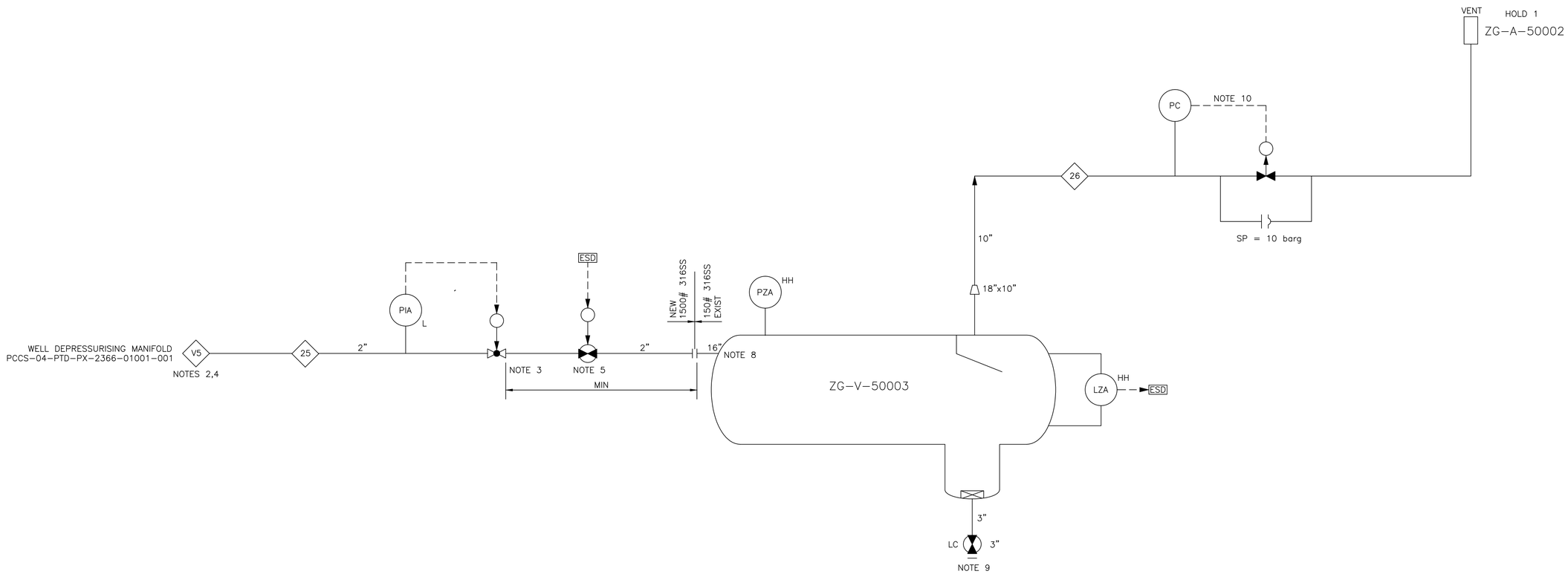

REFERENCE DRAWINGS.	DRAWING No.

NOTES:

1. DELETED.
2. WELL VENT FLUIDS MAY CONTAIN WATER, METHANOL & HYDROCARBONS.
3. RATE LIMITED BY ρv2 IN 2" PIPEWORK D/S PCV.
4. SYSTEM TO ALLOW DEPRESSURING ABOVE SSSV FOR LEAK−OFF TESTING.
5. VALVE ONLY TO OPEN WHEN SSSV SHUT EXCEPT DURING WH−03 SAMPLING.
6. DELETED.
7. ORIGINAL HC CAPACITY.
8. EXISTING SCHOEPENTOETER TO BE REMOVED.
9. FLEXIBLE HOSE CONNECTION TO DRAIN WELL FLUIDS TO IBC.
10. DURING VENTING, PRESSURE CONTROL VALVE TO BE ON MANUAL CONTROL AT 100% OPEN.

HOLDS:

1. RE−USE OF VENT TIP.
2. CLEARED.
3. WELL DEPRESSURING RATE.

REV	DATE	DESCRIPTION	DRAWN	CHK or TECH REF	DES ENG.	APP'D

SIPC Projects & Technology Upstream Major Projects - EMEA

UTILITY FLOW SCHEME
GOLDENEYE WELLHEAD
& LUBRICATOR VENT SYSTEM

DRG No. PCCS−04−PTD−PX−2366−50002−001

REV. K01

THIS DOCUMENT ORIGINATED IN U.K.

THIS DOCUMENT HAS AN ECCN OF EAR99

Peterhead CCS Project

Doc Title: Goldeneye Platform Master Equipment List for PCCS

Doc No: PCCS-04-PTD-PX-6612-00001-001

Revision: K01

KEYWORDS

Equipment List

Project : Shell Goldeneye Topsides Platform Equipment List

Equipment Tag Number	Item	No. off	Rating	Capacity	PED module	Design Temperature (°C)	Design Pressure (barg)	Operating Temperature (°C)	Operating Pressure (barg)	Load (kW)	Length T/T (m)	Width (ID) (m)	Height (T/T) (m)	Volume (m3)	Dry weight (Te)	Operating weight (Te)	Location	Remark	Material Shell	Material Internals	Requisition number	PO number	Supplier	PCCS project	Document Revision
Existing equipment list																									
ZG-WH-1	Wellhead / xmas tree	1	5000#			(Note 4)	345										Cellar	Xmas tree assembly will be replaced			-	-	Shell	Replacement	
ZG-WH-2	Wellhead / xmas tree	1	5000#			(Note 4)	345										Cellar	Xmas tree assembly will be replaced			-	-	Shell	Replacement	
ZG-WH-3	Wellhead / xmas tree	1	5000#			(Note 4)	345										Cellar	Xmas tree assembly will be replaced			-	-	Shell	Replacement	
ZG-WH-4	Wellhead / xmas tree	1	5000#			(Note 4)	345										Cellar	Xmas tree assembly will be replaced			-	-	Shell	Replacement	
ZG-WH-5	Wellhead / xmas tree	1	5000#			(Note 4)	345										Cellar				-	-	Shell	Replacement	
ZG-WH-6	Wellhead / xmas tree	1	5000#			-	-										Cellar				-	-	Shell	Not required	
ZG-WH-7	Wellhead / xmas tree	1	5000#			-	-										Cellar				-	-	Shell	Not required	
ZG-WH-8	Wellhead / xmas tree	1	5000#			-	-										Cellar				-	-	Shell	Not required	
ZG-JB-10002	Drill rig interface JB	1													0.1	0.1	Weather				04113	T050	Rexel	PCCS	
ZG-HPU-10011	Wellhead hydraulic power unit package	1				-8.2/+24.5	356/207				0.8	0.8	1.7		0.86	0.9	Cellar				07402	R503	SMS	PCCS	
ZG-HPU-10021	Wellhead hydraulic power unit package	1				-8.2/+24.5	356/207				0.8	0.8	1.7		0.86	0.9	Cellar				07402	R503	SMS	PCCS	
ZG-HPU-10031	Wellhead hydraulic power unit package	1				-8.2/+24.5	356/207				0.8	0.8	1.7		0.86	0.9	Cellar				07402	R503	SMS	PCCS	
ZG-HPU-10041	Wellhead hydraulic power unit package	1				-8.2/+24.5	356/207				0.8	0.8	1.7		0.86	0.9	Cellar				07402	R503	SMS	PCCS	
ZG-HPU-10051	Wellhead hydraulic power unit package	1				-8.2/+24.5	356/207				0.8	0.8	1.7		0.86	0.9	Cellar				07402	R503	SMS	PCCS	
ZG-A- 20002	Intelligent Pig Receiver	1	1500#	P11 SMART PIG	4	HOLD 6 -26°C/+50°C	213				7.65	0.6/0.5	n/a		7.8	11	Mezzanine	A new spool piece = 2227mm will be added to accommodate intelligent pig. (Notes 1, 5, HOLD 6)			09023	T003	Pipeline Eng	PCCS	
ZG-V-20010	Production Separator	1	1500#	$27m^3$	4	-40/+85	213					2.5	4.1		56.00	82.00	Cellar	Not required for PCCS			09016	T001	DSF	Mothballed	
ZG-L-20013	DCS panels	5									4.0	0.8	2.0		0.4	0.4	Cellar				-	-	Shell	PCCS	
ZG-L-20014	Third party panel	1									0.8	0.8	2.0		0.5	0.5	Cellar				07424	T103	Eastern Switchgear	Not required	
ZG-L-20015	Operator Interface (HMI)	1									3.2	1.2	1.5		0.25	0.25	Cellar				-	-	Shell	PCCS	
ZG-D-46002	Potable Washdown (pressure washer) unit	1		$0.02m^3/hr$		ambient	200			5.5	1.0	0.7	0.8		0.13	0.15	Weather				09044	T095	Anglo Scottish	PCCS	
ZG-T-46010	Fresh water storage tank	1	150#	$12m^3$		-8.2/+24.5	0.07				3.4	2.0	2.2		1.5	13.50	Weather	HOLD 12			09038	T042	Conder	PCCS	
ZG-A-50002	Vent tip	1	150#		4	-100/+85	10					0.3	3.0		0.2	0.2	Vent Stack	To be re-used for Well vent			09041	T040	Argo Flare	PCCS	
ZG-P-50003	Vent KO drum pump	1	150#	$5.0m^3/hr$	4	-40/+85	10			3.0	2.0	2.0	1.0		1.00	1.00	Cellar	Not required for PCCS			09029	R506	Kinder Janes	Removed	
ZG-V-50003	Vent KO drum	1	150#	$25m^3$		-100/+85	10				4.4	1.8			7.82	8.82	Cellar	To be retained for PCCS Well Depressurisation Duty. Schoepentoeter removed			09026	T027	Bendalls	PCCS	
ZG-T-54001	Diesel storage tank	1		$53.7m^3$		-8.2/+24.5	0.83					2.6	10.6			43.00	Cellar/mezz	3 months storage capacity, located within crane pedestal			09036	T048	Gray Fabrication	PCCS	
ZG-P-54003	Diesel transfer pump (crane fill)	1	150#	$1.5m^3/hr$		-8.2/+24.5	10			0.6	0.3	0.2	0.6		0.1	0.1	Cellar				09047	T102	Pump & package	PCCS	
ZG-T-60010	Non-Hazardous open drains (Tote) tank	1	150#	$5m^3$		ambient	Atmos				2.0	2.0	1.5		2.3	8.0Max	Cellar				09032	T077	Falcon	PCCS	
ZG-HRL-65036	Twin agent skid	1	150#	$9/7m^3/hr$		-8.2/+24.5	15				2.2	0.9	2.1		0.95	1.45	Weather				14034	T096	Norfass	PCCS	
ZG-HRL-65037	Twin agent hosereel	1	150#	$9/7m^3/hr$		-8.2/+24.5	15				1.5	0.9	1.5		0.24	0.26	Helideck				14034	T096	Norfass	PCCS	
ZG-HRL-65038	Twin agent hosereel	1	150#	$9/7m^3/hr$		-8.2/+24.5	15				1.5	0.9	1.5		0.24	0.26	Helideck				14034	T096	Norfass	PCCS	
ZG-LB-65044	TEMPSC	1		32 man							6.6	2.2	2.7		6.9	9.2	Cellar	Davit lauched, includes davit weight			14022	T043	Norsafe	PCCS	
ZG-L-65047	TEMPSC winch control panel	1									0.8	0.3	0.8		0.10	0.10	Cellar				14022	T043	Norsafe	PCCS	
ZG-A-65059	Firemains equipment cabinet	1													0.15	0.15	Weather				14025	T068	ISP	PCCS	
ZG-A-65071	Helicrash equipment cabinet	1													0.15	0.15	Weather				14025	T068	ISP	PCCS	
ZG-A-65072	Helicrash equipment cabinet	1													0.15	0.15	Cellar				14025	T068	ISP	PCCS	
ZG-LB-65073	Liftcraft	1		12 man											0.13	0.13	Cellar				14025	T068	ISP	PCCS	
ZG-LB-65074	Liftcraft	1		12 man											0.13	0.13	Cellar				14025	T068	ISP	PCCS	
ZG-A-65075	Evacuation equipment cabinet	1													0.15	0.15	Cellar				14025	T068	ISP	PCCS	
ZG-A-65076	Evacuation equipment cabinet	1													0.15	0.15	Cellar				14025	T068	ISP	PCCS	
ZG-A-65077	Life jacket cabinet	1													0.10	0.10	Cellar				14025	T068	ISP	PCCS	
ZG-L-65078	ESD panels	4									3.2	0.8	2.0		0.5	0.5	Cellar				-	-	Shell	PCCS	
ZG-L-65079	F&G panels	3									2.4	0.8	2.0		0.3	0.3	Cellar				-	-	Shell	PCCS	
ZG-HPU-72001	Topsides hydraulic power unit package	1				-8.2/+24.5	256/207				2.5	1.2	2.5		2.51	2.81	Cellar	Topsides ESD valves & actuated control valves package, Note 7			07402	R503	SMS	PCCS	
ZG-PAM-75002	PA system rack	1									0.8	0.6	2.0		0.20	0.20	Cellar	To free up space within the LAN cabinet , 10U for Meterological system will be transefered to this PAGA cabinet and new data equipment will be installed in this cabinet			12007	T018	Protobase	PCCS	
ZG-REQ-75004	Radio systems rack	1									0.8	0.6	2.0		0.2	0.2	Cellar	Existing Equipment to be reorganised , reorganisation to be carried forward to detailed design. Additionally space will be made available for new monitoring Systems such as Flow Meter Computers			12007	T018	Protobase	PCCS	
ZG-REQ-75005	PABX system Rack	1									0.8	0.6	2.0		0.2	0.2	Cellar	Existing cabinet will be changed out and replaced by Line of Sight Radio Cabinet			12007	T018	Protobase	PCCS	
ZG-REQ-75006	Stacom systems rack	1									0.8	0.6	2.0		0.2	0.2	Cellar	Cabinet becomes redudantt after installation of Line of Sight Radio cabinet (ZG-REQ-75004)			-	-	Shell	PCCS	
ZG-REQ-75007	LAN rack	1									0.8	0.6	2.0		0.2	0.2	Cellar	Meteorological equipment to be moved to PAGA cabinet (ZG-PAM-75002). Upgrade and rewiring to be undertaken for new systems such as VOIP telephone exchange			12007	T018	Protobase	PCCS	
ZG-REQ-75021	Entertainment systems Rack	1									0.8	0.6	2.0		0.2	0.2	Cellar				12007	T018	Protobase	PCCS	
ZG-RAE-75022	Satcom Radome	1													0.45	0.45	Cellar	Will be changed out for PCCS			-	-	Shell	PCCS	
ZG-RAE-75023	Satcom Radome	1													0.45	0.45	Cellar	Will be changed out for PCCS			-	-	Shell	PCCS	
ZG-A-79002	Platform crane	1		18T@30m Radius											62.50	62.50	Weather	Ram Luffing type - 30 m Boom length, Diesel Engine Driven			09020	R500	Liebherr	PCCS	
ZG-A-80002	Diesel generator package	1								83.0	3.5	1.6	2.8		4.8	5.35	Cellar				04101	R501	T&L	PCCS	
ZG-A-80003	Diesel generator package	1								83.0	3.5	1.6	2.8		4.8	5.35	Cellar				04101	R501	T&L	PCCS	
ZG-A-80004	Diesel generator package	1								83.0	3.5	1.6	2.8		4.8	5.35	Cellar				04101	R501	T&L	PCCS	
ZG-L-80005	400V AC switchboard	1									5.0	0.6	2.2		2.5	2.5	Mezzanine				04102	T011	ABB	PCCS	
ZG-L-80006	230V AC manned distribution board	1									1.3	0.3	1.2		0.3	0.3	Mezzanine				04104	T030	Capelrig	PCCS	
ZG-L-80007	230V AC unmanned distribution board	1									0.8	0.3	1.2		0.3	0.3	Mezzanine				04104	T030	Capelrig	PCCS	
ZG-L-80008	230V AC UPS charger A	1									0.8	0.8	2.0		0.95	0.95	Mezzanine				04103	T013	Chloride	PCCS	
ZG-L-80009	230V AC UPS charger B	1									0.8	0.8	2.0		0.95	0.95	Mezzanine				04103	T013	Chloride	PCCS	
ZG-L-80013	230V AC UPS Battery A	1									1.5	0.6	1.2		2.30	2.30	Mezzanine				04103	T013	Chloride	PCCS	
ZG-L-80014	230V AC UPS Battery B	1									1.5	0.6	1.2		2.30	2.30	Mezzanine				04103	T013	Chloride	PCCS	
ZG-L-80015	Sync panel										0.8	0.4	2.1				Mezzanine				04101	R501	T&L	PCCS	
ZG-L-80017	Navigational aids control panel	1									2.0	0.6	2.1		1.1	1.1	Mezzanine				04105	R505	Orga	PCCS	
ZG-L-80019	Navigation aids battery A	1									1.5	0.6	1.2		1.2	1.2	Mezzanine				04105	R505	Orga	PCCS	
ZG-L-80021	Navigational aids main/secondary lights A&B	2									0.8	0.8	2.5		0.15	0.15	Cellar				04105	R505	Orga	PCCS	
ZG-L-80022	Navigational aids subsidiary lights A&B	2									0.5	0.5	0.8		0.05	0.05	Weather				04105	R505	Orga	PCCS	
ZG-L-80024	Navigational aids main/secondary Foghorns A&B	2													0.18	0.18	Weather				04105	R505	Orga	PCCS	
ZG-L-80025	Helicopter Wave-off lights	1													0.10	0.10	Vent Stack				04105	R505	Orga	PCCS	
ZG-HAH-86075	HVAC package supply	1									6.5	1.6	2.3		4.17	4.17	Weather				06501	R507	NSV	PCCS	
ZG-HAH-86076	HVAC package extract	1									4.5	1.6	2.3		2.90	2.90	Weather				06501	R507	NSV	PCCS	
ZG-L-86144	HVAC package control panel	1									2.0	1.0	2.0		0.35	0.35	Mezzanine				06501	R507	NSV	PCCS	
ZG-HAH-86171	HVAC package chiller/pump skid	1									1.2	2.2	1.6		4.2	4.3	Weather				06501	R507	NSV	PCCS	
ZG-HPU	Atlantic Cromarty HPU	1																			-			Removed	
New Equipment List																									
ZG-S-20045A/B	CO2 filters	2	1500#	137050kg/hr(Note 2)		-80/50	213/FV	2.5-10	90-115		na	0.61	2.0(d/t)		5.4		Cellar	Catridge Type Filter 2x100% duty/standby capable of operating as 2x50% if required for future expansion	316SS	316SS				New PCCS	
ZG-S-73100	Methanol Filter	1	1500#	$5.0m^3/hr$		-8.2/45	240/FV	<30	225		n/a	0.22	1.2		1.2		Cellar	Catridge Type Filter 1x100%	316SS	316SS				New PCCS	
FT-20044	Total platform Meter	1	1500#	137050kg/hr(Note 2)		-80/80	213/FV	3-10	115		n/a	n/a	n/a	n/a				Venturi meter	316SS	316SS				New PCCS	
FT-10011/21/41/51	Flowline meters	3+1 FUT	1500#	137050kg/hr(Note 2)		-80-80	213/FV	3-10	115		n/a	n/a	n/a	n/a				Venturi meter	316SS	316SS				New PCCS	
ZG-WH-1	Xmas tree	1	5000#			Note 8	345										Cellar							New PCCS	
ZG-WH-2	Xmas tree	1	5000#			Note 8	345										Cellar							New PCCS	
ZG-WH-3	Xmas tree	1	5000#			Note 8	345										Cellar							New PCCS	
ZG-WH-4	Xmas tree	1	5000#			Note 8	345										Cellar							New PCCS	
ZG-WH-5	Xmas tree	1	5000#			Note 8	345										Cellar							New PCCS	
NotApplicable	Nitrogen Bottle Rack System	1	1500#	Note 6		-29/45	300	Amb			VTA	VTA	VTA		VTA	VTA	Weather							New PCCS	

NOTES

1 Dimensions of the pig receiver are as follows:
The pig receiver will be re-used, a new spool will be added in order to accommodate a 3.5m long intellegent pig.

ID of Minor Barrel	=	457	mm
Minimum ID of Major Barrel	=	543	mm
Length of Major Barrel	=	5.1	m
Length of existing Minor Barrel	=	1.5	m
Length of the spool	=	2.227	m
Total Length of New Minor Barrel	=	3.727	m

2 The contractual total CO2 injection is 1,160,000 Tonnes Per Annum. Taking availability into consideration the maximum export limit (MEL) is expected to be 137.050 tonnes/hr.

3 Legend for the PCCS column

Terminology	Explanation
Replacement	The existing equipment will be removed and replaced by a like to like one with new design temperature/pressure or different materials
Not required	The equipment will not be required for PCCS
Removed	The equipment will be removed
Mothballed	The equipment will not be required for PCCS and will be mothballed
PCCS	Existing equipment which will be reused for PCCS project
New PCCS	New equipment required for PCCS project
MODIFIED	Equipment item retained and modified for CCS

4 The existing well xmas trees have a minimum design temperature of -18 °C

5 FEED Base Case: reuse existing pig trap for major barrel.

6 16 Cylinder N2 package required

7 New accumulator required, to be incoporated into the existing Platform HPU, ZG-HPU-72001

8 New xmas trees are API 6A Class K rated for -60ºC/+82ºC

HOLDS
1-5 Cleared Deleted
6 Acceptability of re-use of CS pig trap subject to fracture mechanics assessment for minimum metal temperature less than lower design temperature.
7-11 Cleared
12 Inspection to confirm whether existing vent tip can be re-used.

FILTER EQUIPMENT SUMMARY

Design book No.: | Page of

Project: PETERHEAD CCS PROJECT | Location: Goldeneye Topsides Platform | Principal: DECC

Filter Number	Service	Type	Design temperature °C	Design pressure barg	Size of vessel dia. x length mm	Capacity per Filter m^3/h	Materials of construction	Remarks
ZG-S-20045A/B	Carbon Dioxide (CO_2)	Catridge Filter	-80/50	213	0.61 x 2.0	137.050 tonnes/hr	Stainless Steel	2x100% duty/standby capable of operating as 2x50% if required for future expansion
ZG-S-73100	Methanol	Catridge Filter	-8.2/45	240	0.22 x 1.2	5m³/hr	Stainless Steel	1x100% ,VTA of the Solid loading capacity for the filter

Notes:

Revision letter	K01			
Date				
Signature				

OPERATING MODES

A: NORMAL MODE. EXPORT > MINIMUM SINGLE WELL INJECTION RATE (MSWIR)
SINGLE OR MULTIPLE WELL INJECTION
PCV1 CONTROLLED FROM PICA 1 SP = 115 barg
SINGLE WELL HCV 1 = 100%
MULTIPLE WELL : CHOKES ADJUSTED (REMOTE MANUAL) FOR INJECTION SPLIT

B: UNPACK MODE. EXPORT ≤ MSWIR
SINGLE NOMINATED WELL INJECTION
PCV1 CONTROLLED FROM LOW SELECT
PICA 1 SP = 90 barg, FIA 1 SET AT MSWIR, HCV 1 = 100%

PIG RECEIVER
ZG-A-01001

DESIGN PRESSURE	213 barg
DESIGN TEMPERATURE	−26/50°C
SIZE (DIA x T/T)	
MAJOR BARREL	600mm NB x 5100mm
MINOR BARREL	500mm NB x2550mm
MATERIAL	CS

CO_2 FILTER
ZG-S-01002A/B — NOTE 11

CAPACITY	138.3 t/h
DUTY	2X100%
DESIGN PRESSURE	213 barg
DESIGN TEMPERATURE	−80/50°C
FILTER SPECIFICATION	5 MICRONS
MATERIAL	316SS

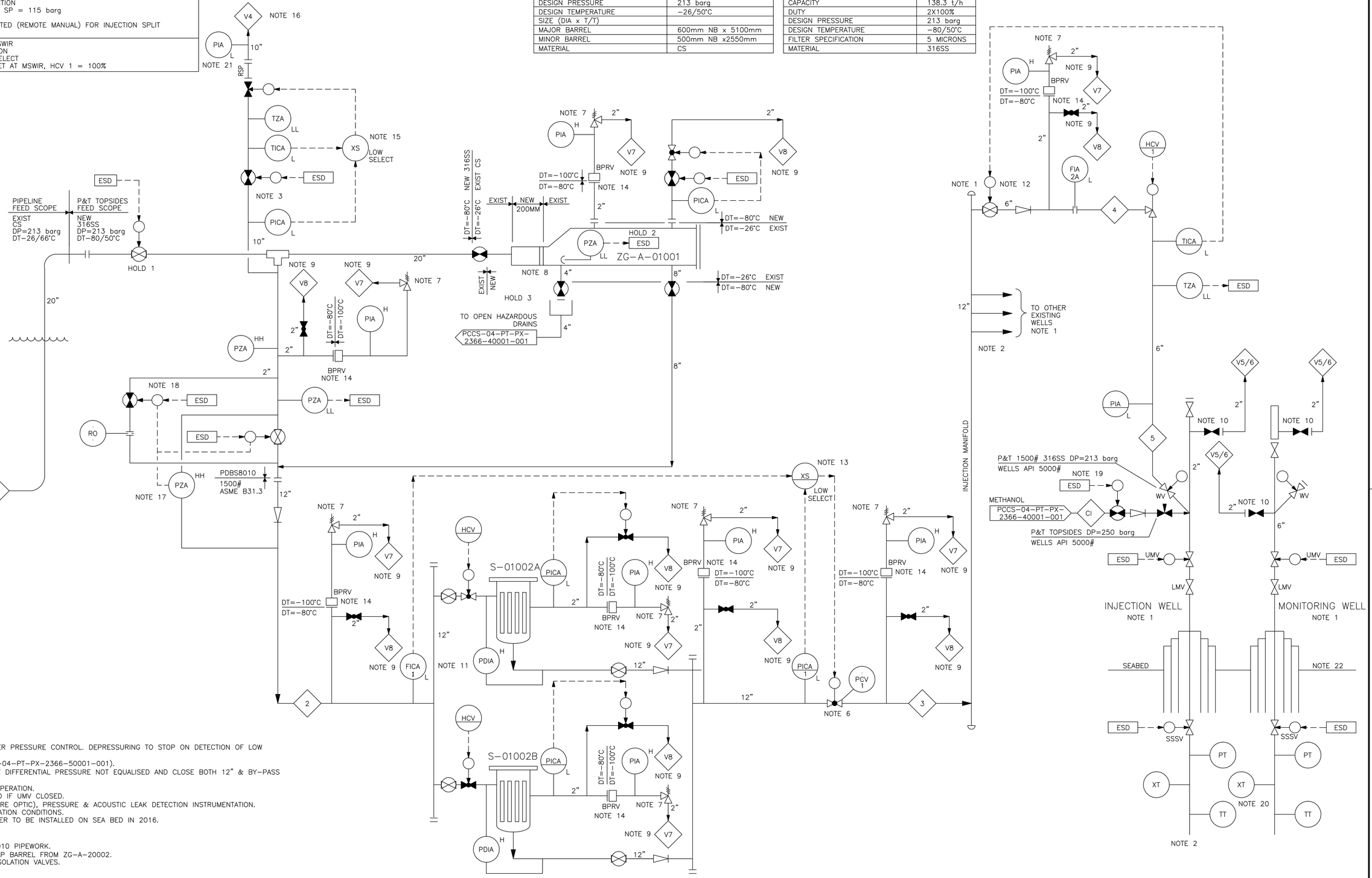

NOTES cont'd:
15. PIPELINE DEPRESSURING UNDER PRESSURE CONTROL. DEPRESSURING TO STOP ON DETECTION OF LOW TEMPERATURE GAS.
16. VENT TO ATMOSPHERE (PCCS−04−PT−PX−2366−50001−001).
17. INHIBIT 12" VALVE OPENING IF DIFFERENTIAL PRESSURE NOT EQUALISED AND CLOSE BOTH 12" & BY−PASS IF U/S < D/S PRESSURE.
18. THROTTLE FOR IP RECEIVER OPERATION.
19. METHANOL INJECTION INHIBITED IF UMV CLOSED.
20. DOWNHOLE TEMPERATURE (FIBRE OPTIC), PRESSURE & ACOUSTIC LEAK DETECTION INSTRUMENTATION.
21. ALARM FOR SOLID CO_2 FORMATION CONDITIONS.
22. CO_2 SENSOR AND SEISMOMETER TO BE INSTALLED ON SEA BED IN 2016.

HOLDS:
1. MATERIALS SELECTION FOR B58010 PIPEWORK.
2. RETENTION OF EXISTING PIG TRAP BARREL FROM ZG−A−20002.
3. REUSE OF EXISTING PIG TRAP ISOLATION VALVES.

REFERENCE DRAWINGS.	DRAWING No.

NOTES:
1. FIVE PRODUCTION WELLS TO BE CONVERTED TO INJECTION/MONITORING WELLS.
2. DRAWING DEPICTS ONE WELL AND FLOWLINE AND IS TYPICAL FOR ALL 4 INJECTION WELLS.
3. PIPELINE DEPRESSURISATION FACILITY INHIBITED WHEN HELICOPTER OPERATIONS ARE ONGOING.
5. EMERGENCY DEPRESSURING NOT REQUIRED.
6. BACK PRESSURE CONTROLLER TO ENSURE DENSE PHASE IS MAINTAINED IN THE PIPELINE, P ≥ 90 barg
7. THERMAL RELIEF VALVE.
8. PIG RECEIVER DESIGNED FOR INTELLIGENT PIGS.
9. VENT BELOW DECK. (PFS PCCS−04−PT−PX−2366−50001−001)
10. KILL WING VALVE USED TO VENT VIA WELL VENT SYSTEM (PCCS−04−PT−PX−2366−50001−001).
11. 2x100% FILTERS TO BE DESIGNED TO OPERATE AS 2x50% TO ACCOMMODATE FUTURE EXPANSION.
12. ROUTING VALVE CLOSED IF PERSISTENT LOW TEMP (<0°C) DETECTED D/S OF CHOKE.
13. REFER TO OPERATING MODES.
14. BPRV − BUCKLING PIN RELIEF VALVE

REV	DATE	DESCRIPTION	DRAWN	CHK or TECH REF	DES ENG.	APP'D

SIPC Projects & Technology Upstream Major Projects - EMEA

OFFSHORE PROCESS FLOW SCHEME
SHELL GOLDENEYE TOPSIDES
FACILITIES FOR CARBON STORAGE

DRG No. PCCS−04−PT−PX−2366−01001−001
REV. K01

THIS DOCUMENT ORIGINATED IN U.K.
THIS DOCUMENT HAS AN ECCN OF EAR99