Shell U.K. Limited

Brent Delta Topside Decommissioning Programme

Consultation Draft

Shell Report Number BDE-D-TOP-AA-5880-00001

Rev 04

18 February 2015

Contents

Frontispiece: Aerial view of the Brent Delta topside in 2013

This page is deliberately blank

Lists of Figures, Tables and Appendices

This page is deliberately blank

1 EXECUTIVE SUMMARY

1.1 Decommissioning Programme

This document contains one Decommissioning Programme (DP), for the topside of the Brent Delta platform. It is submitted by the co-venturers Shell U.K. Limited (Shell, operator) and Esso Exploration and Production UK Limited (Esso) both being the recipients of a Section 29 Notice, and throughout this document the terms 'owners', 'we', and 'our' refer to the co-venturers Shell and Esso.

In accordance with the *Petroleum Act 1998* [1] and the *DECC Guidance Notes: Decommissioning of Offshore Oil and Gas Installations and Pipelines under the Petroleum Act 1998* [2], the owners as Section 29 Notice holders seek approval from the Department of Energy and Climate Change (DECC) to decommission the Brent Delta topside by removing it completely and returning it to shore for recycling and disposal. No derogation from the general rule of OSPAR Decision 98/3 [3] is required or sought.

In conjunction with public, stakeholder and regulatory consultation this DP is submitted in compliance with national and international regulations and DECC guidelines. It describes the principles of the removal activities, summarises the schedule of offshore and onshore work which together are expected to last approximately 18 months, and presents an assessment of the environmental impacts of the proposed programme.

1.2 Introduction

The Brent Field in the northern North Sea is reaching the end of its economic life and DECC has accepted the Final Field Development Plan (FFDP) which was submitted in December 2008. One of the Brent Field's platforms, Brent Delta, ceased production on 31st December 2011, and all 48 of its wells have now been plugged and abandoned in accordance with the Oil and Gas UK *Guidelines for the Suspension and Abandonment of Wells*, Version 4, July 2012 [4]. Information about the plugging and abandonment of all the Brent Field wells will be included in the forthcoming *Brent Field Decommissioning Programme*.

We started planning the complex programme to decommission the Brent Field in 2006, and as a result of the extensive period of study there is a substantial body of work which describes the facilities and their environmental settings, and provides information on the technical and engineering aspects of a range of decommissioning options, and the ways in which those options could be undertaken. All the important supporting studies are being scrutinised by an independent review group (IRG[1]) chaired by Professor John Shepherd of Southampton University. The IRG comprises technical, engineering and environmental experts and their remit is to review and report on the completeness, objectivity and rigour of supporting studies, and the validity of the conclusions or findings that are based on these studies. We do not have any editorial control over the IRG reports on their findings.

After detailed technical and engineering studies we have decided to remove three of the Brent Field topsides, including Brent Delta, using the new single lift vessel (SLV) *Pioneering Spirit* currently being commissioned by Excalibur AS (part of the AllSeas Group). The topsides will be transported to the Able Seaton Port (ASP) facility at Teesside, operated by Able UK Limited (Able), for dismantling, recycling and disposal. As part of a phased programme of offshore work, the Brent Delta topside will be ready for removal in 2016 and will be the first Brent topside to be removed. To expedite removal and avoid the need for several years of monitoring and maintenance to ensure the structural integrity of the topside for eventual lifting, the owners seek approval, through this *Brent Delta Topside DP*, to remove the topside in 2016, while preparing the *Brent Field Decommissioning Programmes Document* which will comprise two further DPs: (i) the *Brent Field DP*, dealing with other Brent installations and facilities, and (ii) the *Brent Field Pipeline DP*, dealing with the pipeline system. The removal of the Brent Delta topside will not affect the availability of decommissioning options for any other facility in the Brent Field.

[1] Details on the IRG and its terms of reference can be found at www.shell.co.uk/brentdecomm

1.3 Overview of installation being decommissioned

Table 1.1 Installation Being Decommissioned			
Field name		Quad/Block	
BRENT FIELD		UKCS Block 211/29	
Surface Installation			
Total Number	Type	Location	Weight
1	Brent Delta Topside	61° 07′ 56.6″N 01° 44′ 10.1″ E	Approx. 24,200 tonnes
Production Type	Water Depth (m)	Distance from nearest UK coastline (km)	Distance to median line (if less than 5km)
Gas and oil	142	120	N/A

Table 1.2 Details of the Section 29 Notice Holders		
Section 29 Notice Holder	Registration Number	Equity Interest (%)
Shell U.K. Limited	140141	50
Esso Exploration and Production UK Limited	207426	50

1.4 Summary of proposed programme of work

Table 1.3 Summary of Proposed Decommissioning Programme		
Selected Option	Reason for Selection	Proposed Decommissioning Solution
1. Brent Delta Topside		
Complete removal, onshore dismantling, recycling and disposal.	Complies with requirements of OSPAR Decision 98/3 [3].	The Brent Delta topside will be removed in one piece by an SLV and transferred to a barge at a nearshore site for back-loading to the ASP facility at Teesside. Some equipment may be re-used, but the majority of material will be recycled. Non-recyclable material will be disposed of to landfill.
2. Brent Delta Wells		
Plug and Abandon	Meets DECC regulatory requirements.	All the Brent Delta wells have been plugged and abandoned in accordance with the Oil & Gas UK *Guidelines for the Suspension and Abandonment of Wells* [4]. PON5/PON15 applications under the relevant regulations were submitted and approved.
3. Brent Delta Interdependencies		
There are no alternative uses for the Brent Delta platform, and in line with the approved FFDP, DECC have confirmed that it can be decommissioned. There are no alternative uses for the Brent Delta topside. Neither the platform wells nor any equipment or facility on the topside are needed to complete any technically feasible decommissioning options for managing the sediments in the oil storage cells of the Brent Delta gravity base structure (GBS). The two pipelines to the adjacent platform Brent Charlie will have been emptied and flushed before the Brent Delta topside is removed. The whole mass of the Brent Delta topside (approximately 24,200 tonnes) will be removed to shore.		

1.5 Field location including field layout and adjacent facilities

Figure 1.1 shows the location of the Brent Field and Brent Delta in relation to the other Brent platforms. The removal of the Brent Delta topside by an SLV and its transportation to shore will have no effects on or implications for any other facility either within or beyond the Brent Field.

Figure 1.1 Location of the Brent Field and the Brent Delta platform.

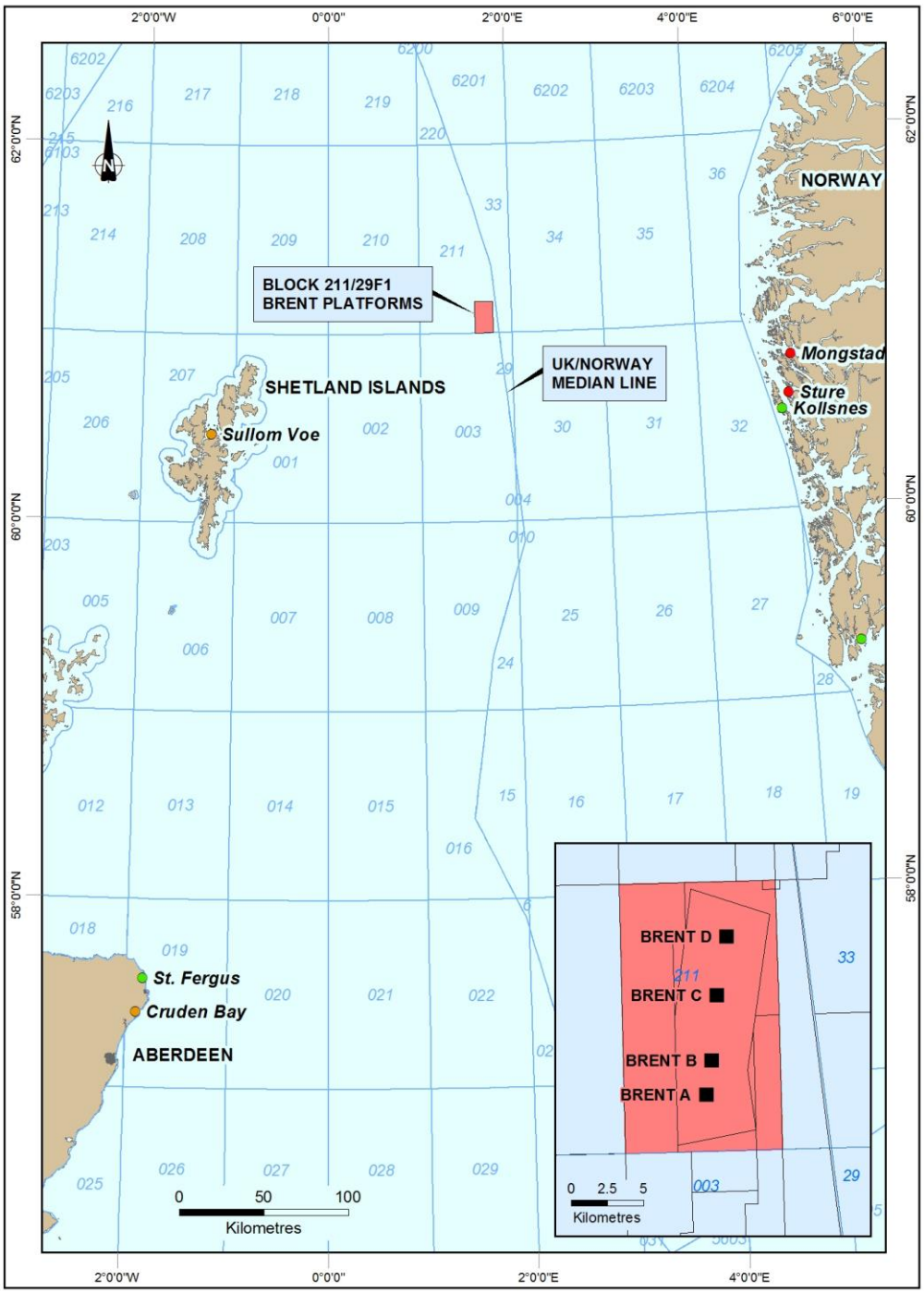

1.6 Industrial implications

We have striven to identify safe, efficient and cost-effective methods and procedures for decommissioning the different types of structures and facilities in the Brent Field. Many contractors and consultancies have contributed to the numerous studies and assessments that have been prepared since 2006 to inform our plans and support our decision-making processes.

During the 'Concept Select' phase of our work, leading international contractors and engineering companies prepared detailed Front End Engineering and Design (FEED) studies describing how different technologies and programmes of work might be used to decommission the Brent structures.

We have selected the SLV *Pioneering Spirit* to lift the Brent Delta topside. This unique vessel will be able to remove topsides of up to 48,000 tonnes quickly and efficiently in one piece for onshore dismantling. This will significantly reduce the duration, risk and cost of decommissioning the topsides of large production platforms, which is typically achieved by dismantling them module by module at the offshore location.

At the same time, we have assessed how our topsides could be dismantled and recycled, and this has included a detailed review of the dismantling capabilities and capacities of a large number of sites in the UK and across Europe. After a comprehensive commercial tendering exercise, we identified the Able UK Limited ASP facility at Teesside as having the necessary facilities, space and experience to deal with the topsides that would be delivered by the SLV, and have now placed a contract with them for the dismantling of three Brent topsides (Alpha, Bravo and Delta). We are now working with Able to upgrade their onshore facilities, including the construction of a new quay and the strengthening of the lay-down area for topsides. The investment that has been made on Teesside will support employment now and in the future as Able enlarge their capabilities, broaden their services, provide additional training to their workforce, and increase their experience in large-scale decommissioning.

2 DESCRIPTION OF THE BRENT DELTA TOPSIDE

2.1 Introduction

Brent Delta has a concrete gravity base structure (GBS) and the topside is supported on three legs (two for drilling, one for utilities) that extend upwards from the cluster of 19 concrete cells known as the caisson (Figure 2.1). All the topside modules and equipment are built on a module support frame (MSF)(Figure 2.2), which is mated to the tops of the concrete legs by steel transition pieces approximately 5m long. The transition pieces are part of the MSF and they meet the tops of the legs at the ring beam (Figure 2.2). The MSF, fitted with some topside modules, was floated over the GBS and attached to it at a nearshore deep water site (before the GBS was towed offshore) and the remaining modules were lifted into place after the GBS had been ballasted down in the Brent Field.

As defined in the Section 29 Notice, the Brent Delta topside is "the whole of the structure located above the ring beams at the top of the concrete legs and including the steel transition pieces." To separate the topside from the concrete legs, we propose to cut through the grout and fixing bolts at the junction of the ring beam and the transition pieces, as described in Section 4.4.

The topside has a 'footprint' of 72m x 47m and the main structure is approximately 44m high to the helideck. It weighs approximately 24,200 tonnes and is divided into three main levels – the MSF, the Module Deck and the Drilling Deck (Figure 2.2). Together these decks house the modules, facilities and equipment for oil and gas drilling, production and processing, and for the accommodation, safety and welfare of the platform's personnel. Figure 2.3 shows the heights of the different topside levels in relation to the proposed cut line.

Figure 2.1 Brent Delta GBS with topside.

Figure 2.2 The three main levels of the Brent Delta topside.

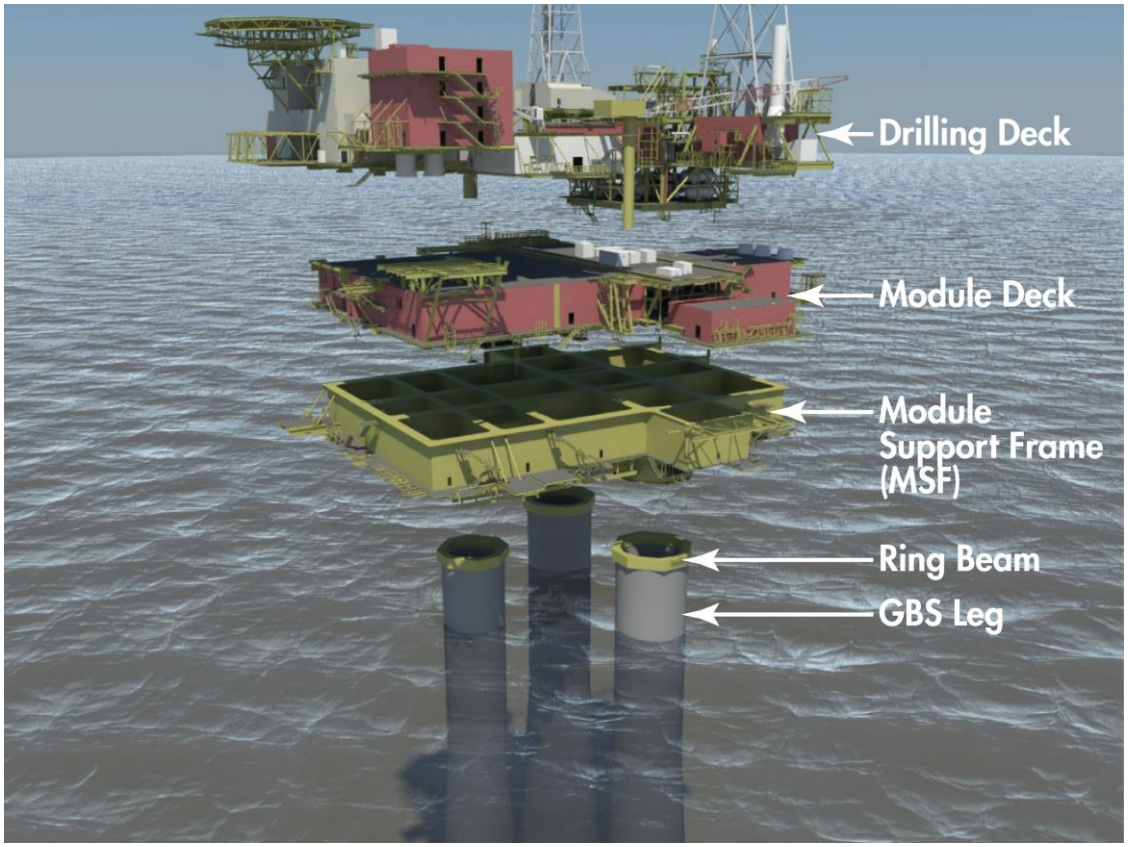

Figure 2.3 Brent Delta topside, heights of the main deck levels and components.

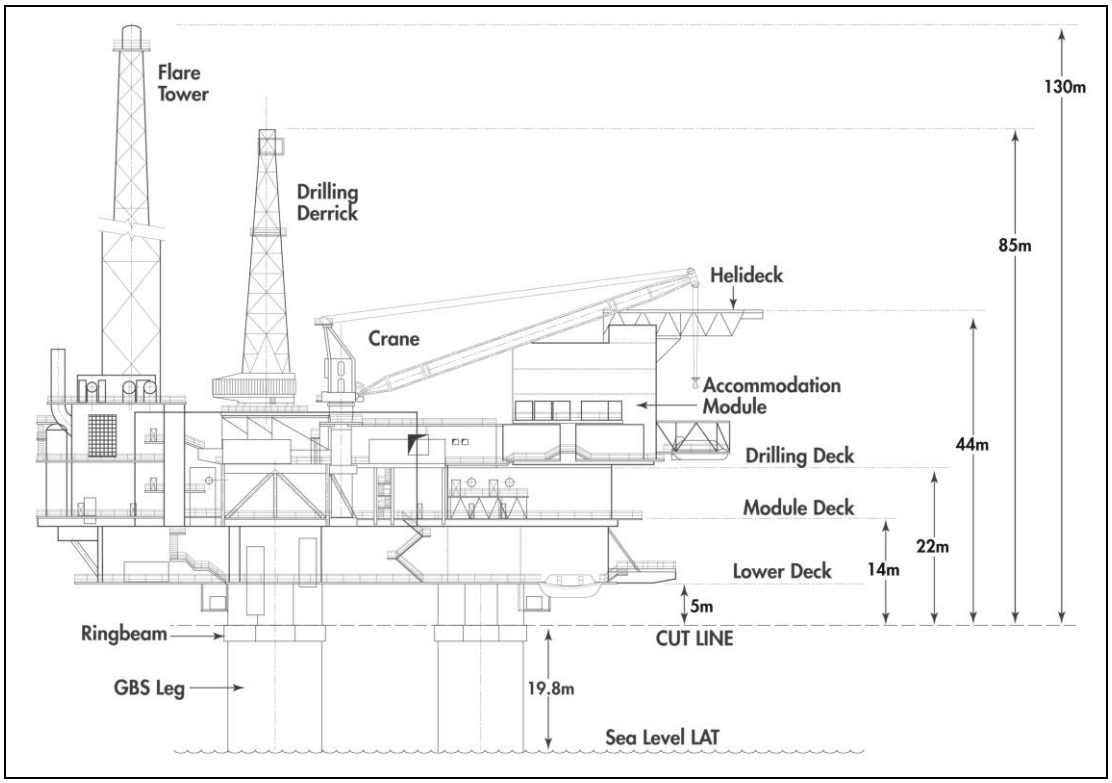

Note: All the height measurements above the cut line have been rounded to the nearest metre.

2.2 Main features

The Brent Delta topside houses the following modules and systems:

- Accommodation and helideck. Comprises the accommodation, laundry, catering, and recreation facilities for the crew. Helicopter landing and fuelling facilities are located on the roof of this module.
- Drilling derrick and support. Comprises equipment for the drilling and maintenance of oil and gas wells, including the drilling rig, an electrical generation package and facilities for the bulk storage, handling, preparation and pumping of drilling fluids.
- Utilities. Comprises firewater and safety systems, water purifying equipment, chemical storage and pumping, potable water bulk storage and pumping, hot water boilers, electrical switchboards, workshop facilities, and diesel fuel storage and pumping.
- Oil and Gas production process modules. Contain all the vessels and equipment to separate the well fluid into its three main components - oil, gas and produced water - and transfer these individual streams to the export pipelines, other areas of the platform or for disposal via the oil storage cells as produced water.
- Water injection module. Contains the equipment to filter and treat raw seawater so that it can be pumped down-hole to enhance production by augmenting the natural pressure of the reservoir.
- Power generation modules. Contain electrical generators, transformers, switchboards and associated equipment. The generators were powered by turbines fuelled by gas from the production process. Brent Delta is now powered exclusively by diesel generators.
- Wellhead modules. Contain the equipment and control valves to regulate the flow of oil and gas from each of the individual wells. The individual flow lines are combined via a manifold system which in turn supplies the oil and gas processing equipment. The modules also contain the water injection wellhead equipment which, when in use, received high pressure treated water from the water injection module and routed it to the dedicated water injection wells and down into the reservoir.
- Flare tower. The tower supports the flare, which was designed to vent and burn any surplus hydrocarbon gas that might pose safety risks to platform personnel and process systems. Following cessation of production (CoP) and removal of the hydrocarbon inventory, the flare is now only used for cold-venting.
- Drainage systems. The drains on the Brent Delta platform are divided into those serving hazardous areas, non-hazardous areas and living quarters. They were used to manage permitted discharges to sea through the use of oil/water separators.

2.3 Inventory of Materials

Table 2.1 provides an inventory of the materials that will be in or on the Brent Delta topside when it is ready for lifting. Together, carbon steel and stainless steel account for approximately 90% of the mass of the topside. Section 4.9 summarises how all the materials on and in the topside will be treated.

Table 2.1 Brent Delta topside, inventory of materials

Material	Unit	Amount	Notes
ABS	tonnes	2	Plastic pipes
Alloy steel	tonnes	555	Pipework, pumps
Aluminium	tonnes	65	Anodes, engines
Asbestos (total)	tonnes	10	Insulation, gaskets
Batteries	tonnes	31	Various battery sets
Butyl rubber	tonnes	2	O-ring seals
Carbon steel	tonnes	19,781	Structural steel, equipment
Ceramics (all types)	tonnes	5	White ware
Chartex/fire protection	tonnes	80	Penetrations
Copper	tonnes	84	Pipes, cables, transformers
Copper nickel alloys	tonnes	309	Pipe valves, pumps
Cork	tonnes	2	Lifebuoys
Cotton	tonnes	6	Bedding
Cutting residues	tonnes	12	Drill cuttings
EPDM	tonnes	11	Cables
Ethylene / Polypropylene	tonnes	85	Cables
Fire foam	m^3	20	Fire fighting systems
Fluorescent tubes	number	3,446	Lighting
Formica	tonnes	2	Living areas
Glass	tonnes	5	Living areas
GRP	tonnes	20	Replaced floor grids
Hydrocarbons	tonnes	<1	Residual hydrocarbons in dead-legs
Inconel / nimonics	tonnes	13	Generators
Insulation	tonnes	104	Structures, pipes
Iron (cast)	tonnes	3	Weights
Lead	tonnes	11	Batteries
LSA scale	tonnes	69	Pipework, vessels
Neoprene	tonnes	5	Various
Ni-resist	tonnes	10	Pump valves
Nylon	tonnes	10	Electrical equipment, ropes
Paint	tonnes	899	Paint on structured steel
Pb-210	MBq	117	LSA scale
Plastics	tonnes	5	Floor coverings
PVC	tonnes	61	Cable covering
Radium (Ra-226)	MBq	711	LSA scale
Radium (Ra-228)	MBq	476	LSA scale
Rubber	tonnes	20	Floor coverings
Stainless steel	tonnes	1,371	Pipes and vessels
Titanium	tonnes	31	Pipes and machines
Wood	tonnes	7	Accommodation
Zinc	tonnes	499	Anodes, paint, galvanising
Approximate Total Weight	**tonnes**	**24,191**	

3 IMPLICATIONS FOR DECOMMISSIONING OTHER INFRASTRUCTURE AND MATERIALS

3.1 Introduction

We have reviewed the removal of the Brent Delta topside to determine if it would have any implications for the decommissioning of the Brent Delta GBS or materials in and around the GBS. Figure 3.1 presents a stylised cross-section of the Brent Delta GBS showing the locations of all the materials or components discussed in this section.

This section briefly describes the following aspects of the Brent Delta Decommissioning Programme and summarises our conclusions on the use of the Brent Delta topside in their execution:

1. Alternative uses for the Brent Delta platform.
2. Decommissioning options for the Brent Delta GBS itself.
3. Decommissioning the conductors inside the drilling legs of the GBS.
4. The use of Brent Delta topside or wells for managing drill cuttings on the seabed at Brent Delta or on the tops of the GBS cells.
5. The use of Brent Delta topside or wells for managing the contents of the GBS oil storage cells.
6. The use of Brent Delta topside or wells for managing material that has accumulated in the minicell annulus in the utility leg.
7. The use of Brent Delta topside or wells for managing material that has accumulated in the drilling legs.
8. The use of Brent Delta topside or wells for managing material that has accumulated in the GBS tri-cells (the tri-cells are described in Section 3.3.6).

Figure 3.1. Location of other materials and components in the Brent Delta GBS.

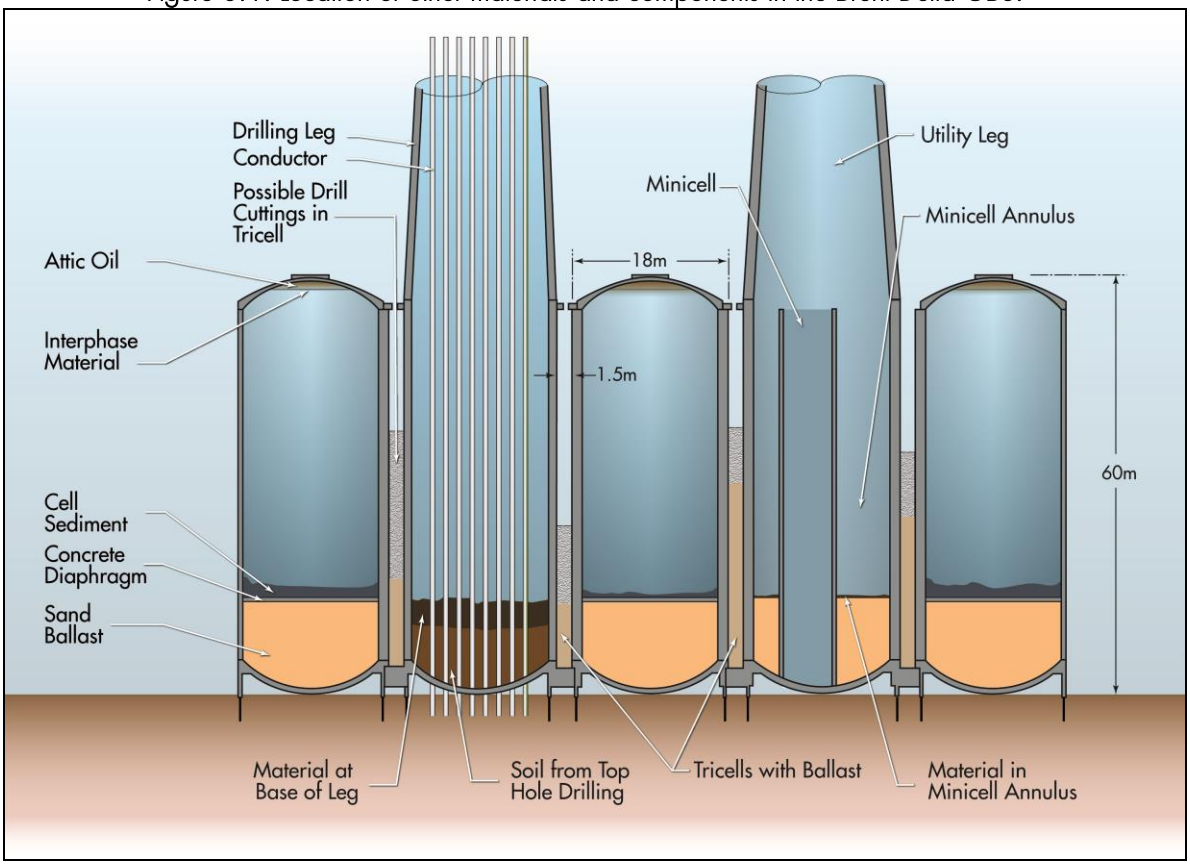

3.2 Implications for decommissioning other structures

3.2.1 Introduction

As a result of the detailed assessments we have completed we are certain that no technically feasible option for decommissioning or managing any other part of the Brent Delta platform or any other platform or structure in the Brent Field would be prejudiced or foreclosed by the removal of the Brent Delta topside in 2016. The following sections summarise our assessments.

3.2.2 Alternative uses of Brent Delta platform including topside

To support the FFDP and the *Brent Field DP*, we performed several studies to investigate the possibility of re-using the Brent platforms and their topsides. We have not identified any further uses for any of the Brent platforms either in their current locations or at other sites. In addition, we have concluded that it would not be technically feasible or commercially viable to use any of the Brent platforms for carbon capture and storage (CCS). Our examination of the viability of CCS considered the Brent Field as a whole, including its present structures, geology and the pipeline system serving it.

3.2.3 Decommissioning the GBS

We have completed detailed assessments describing and assessing the technically feasible options for decommissioning the Brent Delta GBS and these options are being subjected to a full Comparative Assessment (CA) according to the OSPAR 98/3 framework. The specific CA for the Brent Delta GBS will be fully documented in the *Brent Field DP*.

We can confirm that the preparations currently being undertaken on the Brent Delta platform do not preclude or in any way prejudice these options; removal of the Brent Delta topside in 2016 would not prejudge the outcome of the *Brent Field DP* submission. Any external preparatory work for the cutting of the GBS legs would be carried out just before the cutting operation begins and would not require the presence of the topside. All items within the drilling legs and the utility leg are currently secure. Planned activities within these legs during engineering-down will provide assurance that these internal structures will be secure after lifting off the topside. Any cutting operations that may be required in the medium- to long-term future would be preceded by sub-sea intervention to ensure that the cut zones were clean and secure.

3.2.4 Decommissioning the conductors

On Brent Delta the conductors are located inside the two drilling legs and their presence has implications for any programme of work to remove all or part of these legs. All the Brent Delta wells have now been plugged and abandoned, and we have started the conductor removal campaign with the circulation-out of conductor fluids and displacement with seawater; the campaign is planned to be completed before the 2016 lifting season. The scope of conductor removal does not prejudge the outcome of our CA for the GBS or the recommendation that will be presented in the *Brent Field DP*, it keeps open all technically feasible options for the Brent Delta GBS.

3.3 Inter-relationships with decommissioning materials in and around the Brent Delta GBS

3.3.1 Introduction

The Brent Delta GBS contains solid and liquid materials that have accumulated or been deposited during the 35 years of operations. We have examined how these materials could be managed and in particular whether the existing topside, equipment and facilities could play a part in retrieving, managing or disposing of these materials.

3.3.2 Decommissioning the GBS cell contents

Sampling operations successfully performed at Brent Delta in the summer of 2014 have confirmed that the contents of the GBS oil storage cells comprise the following four types of material:

1. Attic oil: a small volume of crude oil trapped in the top of each cell, above the oil export line.
2. Interphase material: an emulsion of oil in water with some sediment particles lying beneath the attic oil.
3. Water: a mixture of seawater and produced water[2].
4. Sediment: a viscous mixture comprising approximately 50% water, 25% oil and 25% sand particles.

The attic oil and interphase material will be recovered for treatment and disposal onshore. We propose to do this by drilling new subsea access holes in each cell, and this does not require the topside to be in place. However, we have not precluded the use of topside-based remotely-operated vehicles (ROV) to bring forward part or all of this work if our technical development/engineering progresses sufficiently before the lift in 2016.

Engineering study work conducted to date has also led to the conclusion that all of the feasible options associated with the remediation of the cell sediment are better carried out without the support of the topside. The detailed engineering justifications will be provided in the *Brent Field DP*, but the main findings that support the conclusion that vessel-based remediation options would be better than topside-based options are presented below.

When elaborating conceptual remediation options for the cell sediment, extensive consideration was given to concepts deployed from or making use of the topside. Although the use of the topside appeared to be of interest for some lengthy remediation options (i.e. those of more than 18 months duration) and for the final disposal of fluids and solids via downhole injection, it also implied major constraints that significantly outweighed the benefits.

The first important observation was that the existing pipework into the cells poses overwhelming limitations to the deployment of any kind of tooling for carrying out cell sediment remediation. The immediate consequence is that a new subsea access would be needed for each storage cell. Once this fact was established, it quickly appeared that the presence of the topside would impose two severe limitations to the creation of a new subsea access. Firstly, the design of the cell-top equipment would be more onerous because the drawdown[3] would still be in place and, secondly, the presence of the over-hanging topside would impose limitations on the deployment of equipment directly over and onto the cell top (either from a vessel or from the topside itself). Although features such as power, utilities and space are readily available on both the topside and vessels, they are expected to require considerably more maintenance on the topside due to its age.

For specific activities such as the downhole re-injection of fluids and/or solids, detailed engineering studies have revealed that the use of existing wells or new wells drilled from the Brent Delta platform would pose so many technical issues that the likelihood of failure would be unacceptably high. Based on those findings, which have been reviewed by the IRG (supplemented for the particular topic of re-injection by experts in drilling and geology), the only feasible re-injection option carried forward into our CA for the GBS cell sediment utilises new remote subsea wells (i.e. not drilled from a platform) dedicated to the re-injection of solids and fluids.

---

[2] Produced water is water that is naturally produced from the reservoir.

[3] The drawdown system is a feature of the platform which maintains the pressure of fluids inside the storage cell at approximately 4 bars below the pressure of the surrounding sea. This is required at all times whilst the topside is in place and manned; it contributes to the structural strength and integrity of the GBS. This implies that any new subsea access created through the concrete wall of the storage cell while the topside was still in place would have to be designed to maintain that pressure difference at all times.

The conclusions of these engineering studies led us to discount the use of the topside to support any of the remediation options for cell sediment. We finally selected the following five remediation options for the detailed CA of the GBS cell sediment; all of those that involve remediation are vessel-based and do not require the use or presence of the Brent Delta topside:

1. Remove and Re-inject (RnR): Remove the sediment and the water and re-inject in remote new subsea wells.
2. Vessel to onshore (VtO): Remove the sediment and the water and bring onshore for treatment and final disposal.
3. Leave in place and treat biologically (LiP-MNA): Leave the sediment and the water in place and treat *in situ* biologically.
4. Leave in place and cap (LiP-Cap): Leave the cell sediment in place and cover it with a layer of capping agent. Treat the water *in situ* biologically.
5. Leave in place (LiP): Leave the cell sediment and water phase in place untreated.

Sediment remediation options would be more efficiently performed from a vessel with the topside no longer in place. In the event where treatment would not be required for the cell sediment but would be required for the water phase, we have identified options to remediate the water phase either with or without the topside.

The options for cell sediment and cell water and the associated CA will be fully documented in the *Brent Field DP*. For the reasons stated above, removing the Brent Delta topside in 2016 will not prejudge the outcome of that submission.

3.3.3 Decommissioning material in the minicell annulus

The minicell is a self-contained cylindrical compartment located at the bottom of the utility leg. It is approximately 60m high and was constructed so that pipework at the bottom of the utility leg could be accessed without having to de-water the whole of the leg.

During maintenance work on pipework inside the minicell in the mid-1990s a volume of hydrocarbon-containing material was found at the bottom of the minicell. In order to complete the work this material was moved into the minicell annulus (the space between the wall of the minicell and the inner wall of the leg) and it now lies on top of the 25m thick layer of ballast sand in the annulus.

In order to identify the recommended management option for this material, which forms part of the GBS inventory, we conducted a sampling operation in 2010 to measure its volume and characterise its composition. The material lying at the bottom of the minicell annulus was estimated to be between 0.6m and 1.2m thick, corresponding to volumes of 125m^3 and 250m^3 respectively. The chemical analysis confirmed that hydrocarbons constituted the main component along with traces of heavy metals which probably originated from corroding pipework in the utility leg. We used this information to identify the following possible remediation options for this material:

1. Remove and Re-inject (RnR): Remove the material at the bottom of the minicell annulus and re-inject it in remote new subsea wells or existing wells on another Brent platform either before or after the removal of the Brent Delta topside.
2. Vessel to onshore (VtO): Remove the material at the bottom of the minicell annulus and take it to shore for treatment and final disposal either before or after the removal of the Brent Delta topside.
3. Leave in place and treat biologically (LiP-MNA): Leave the material at the bottom of the minicell annulus in place and treat it *in situ* biologically either before or after the removal of the Brent Delta topside.
4. Leave in place and cap (LiP-Cap): Leave the material at the bottom of the minicell annulus in place and cover it with a layer of capping agent either before or after the removal of the Brent Delta topside.
5. Leave in place (LiP): Leave the material at the bottom of the minicell annulus in place untreated.

These options are being suitably developed to enable a CA to be performed for the material in the minicell annulus, and this will be presented in full in the *Brent Field DP*. As the CA includes credible options that can be performed after removal of the Brent Delta topside, we are satisfied that the outcome of this CA will not be prejudged by the removal of the Brent Delta topside in 2016.

3.3.4 Decommissioning material in the drilling legs

The two drilling legs on Brent Delta each contain 24 conductors but no sand ballast. As part of the requirement to provide a detailed inventory of the content of the Brent Delta GBS we have carried out sampling programmes and investigations to establish the nature of any material located at the bottom of each drilling leg. The offshore investigations have shown that various materials have accumulated at the bottom of the drilling legs, from two main sources:

1. Drill cuttings created during the installation of the conductors. This is top soil which entered the leg through the annulus between the conductor and the conductor sleeve at the bottom of the leg. The conductors were installed using seawater and they penetrated clean (non-oil bearing) geological formations, so the corresponding cuttings from this activity are believed to be clean.
2. Deposits of material with higher density than seawater that may have originated from accidental spillages in the well bay.

In order to identify the most appropriate management option for the material that has accumulated in the drilling legs we have conducted sampling operations to measure its volume and characterise its composition. The chemical analysis confirmed that hydrocarbons constituted the main component along with traces of heavy metals which have probably come from corroding pipework. The materials we collected appeared to be similar to a degraded oil-based mud (OBM).

For the West drilling leg, we have estimated the volume of material by deducting the estimated height of the clean cuttings generated during the installation of the conductors from the measured height of the whole amount of material present in the leg. Our calculations indicate that the layer of material lying on the top-hole cuttings inside the West drilling leg is not more than 5m thick. This thickness would equate to a volume of approximately 1,200m^3 of material in the West drilling leg. In the East drilling leg, our sampling has shown that the layer of contaminated material is less than 1m thick, which corresponds to a volume of 150-200m^3. The total volume of material in the bottom of the Brent Delta drilling legs would thus be approximately 1,350-1,400m^3. We used this information to identify the following possible remediation options for the material in the drilling legs:

1. Remove and Re-inject (RnR): Remove the material at the bottom of the drilling legs and re-inject it in remote new subsea wells or existing wells on another Brent platform either before or after the removal of the Brent Delta topside.
2. Vessel to onshore (VtO): Remove the material at the bottom of the drilling legs and take it to shore for treatment and final disposal either before or after the removal of the Brent Delta topside.
3. Leave in place and treat biologically (LiP-MNA): Leave the material at the bottom of the drilling legs in place and treat it *in situ* biologically either before or after the removal of the Brent Delta topside.
4. Leave in place and cap (LiP-Cap): Leave the material at the bottom of the drilling legs in place and cover it with a layer of capping agent either before or after the removal of the Brent Delta topside.
5. Leave in place (LiP): Leave the material at the bottom of the drilling legs in place untreated.

These options are being suitably developed to enable a CA to be performed for the material in the drilling legs, and this will be presented in full in the *Brent Field DP*. As the CA includes credible options that can be performed after removal of the Brent Delta topside, we are satisfied that the outcome of this CA will not be prejudged by the removal of the Brent Delta topside in 2016.

3.3.5 Decommissioning seabed and cell-top drill cuttings

On the seabed at the base of the Brent Delta GBS and on the tops of the oil storage cells there are historic accumulations of drill cuttings that were generated using OBM. Recent surveys, together with long-term fate modelling, have demonstrated that neither of these cuttings piles exceeds the thresholds for 'rate of oil loss' and 'persistence over the area of seabed contaminated' laid down in OSPAR Recommendation 2006/5 [6].

In order to access the Brent Delta GBS cells, however, some amounts of cuttings would have to be displaced or removed from the tops of the cells so that the necessary access equipment could be deployed through a hole drilled in the concrete dome. Regardless of the volumes of cuttings involved, such operations would be conducted sub-sea from a surface vessel and would not require any use of, or interactions with, the Brent Delta topside or any of its facilities.

3.3.6 Decommissioning drill cuttings in the GBS tri-cells

The tri-cells are the triangular spaces formed between the circular walls of the GBS cells (Figure 3.1). There are 22 tri-cells on Brent Delta each extending the full height of the storage cell. They contain varying amounts of solid ballast and so the volume of the void space above the ballast in each cell ranges from 337m^3 to 772m^3; the total void space in the Brent Delta tri-cells is estimated to be 14,733m^3. Since the top of each tri-cell is open to the sea and the cell-tops are partially covered by a layer of drill cuttings it is reasonable to assume that the tri-cells also contain some amount of drill cuttings.

If derogation were granted for the Brent Delta GBS, any drill cuttings in the tri-cells would remain undisturbed. It is very unlikely that any programme of work that may be undertaken to manage the drill cuttings on the tops of the cells, or materials in the oil storage cells, the minicell annulus or the drilling legs, would disturb the tri-cell cuttings. Our assessments have shown that if any potential tri-cell cuttings have the same chemical characteristics as the cell-top and seabed OBM cuttings piles, then they would not exceed either of the thresholds in OSPAR Recommendation 2006/5 for the management of drill cuttings. In such circumstances the recommended option for such cuttings piles is to leave them in place, undisturbed, for natural degradation. If remedial work were required on the tri-cell drill cuttings, our judgment is that it would be much easier to access this material after removal of the topside.

3.3.7 Conclusions

Consideration of the application to remove the Brent Delta topside can be de-coupled from decisions about the management or fate of any of the above materials for the following reasons.

- Attic oil: We have committed to removing the attic oil and the best way of doing this is through new sub-sea access holes drilled into the cap of every cell. The oil will be pumped to a vessel for recycling onshore or evacuated via the oil export pipeline before the removal of the topsides.
- Interphase material: We have committed to removing this material at the same time as we remove the attic oil. It will be pumped to a vessel and returned to shore for recycling and/or disposal or evacuated via the pipeline with the attic oil.
- Water: The remediation of the water phase will be linked to the selected remediation option for the cell sediment. If treatment were not required for the cell sediment but was required for the water phase, we have identified options to remediate the water phase both before and after removal of the Brent Delta topside. The topside is therefore not required to deal with the water phase. As with the attic oil and interphase material, however, we do not preclude the use of the topside and platform-based ROVs to optimise this recovery and bring forward part or all of this work if the technical development/engineering progresses sufficiently before the lift in 2016.
- Cell sediment: Detailed studies have shown that there are no technically feasible options for the management of this material that require the use of the topside or its existing facilities, or the existing Brent Delta wells or any new wells that could be drilled from the Brent Delta platform. Therefore the Brent Delta topside would not be required in any management option for the cell sediment. We are

undertaking a CA of options for the management of this material and this will be presented in full in the *Brent Field DP*.

- Material in minicell annulus: We are undertaking a CA of options for the management of this material and this will be presented in full in the *Brent Field DP*. The options include credible options for both the treatment and the removal of this material either before or after the removal of the Brent Delta topside.
- Material in drilling legs: We are undertaking a CA of options for the management of this material and this will be presented in full in the *Brent Field DP*. The options include credible options for both the treatment and the removal of this material either before or after the removal of the Brent Delta topside.
- Drill cuttings in tri-cells: If present, we would recommend that any cuttings in the tri-cells should be left in place, undisturbed to degrade naturally. If for any reason the tri-cell cuttings had to be removed, any such operation would be conducted from a vessel, not from the Brent Delta topside.

4 METHOD FOR REMOVAL AND DISPOSAL OF BRENT DELTA TOPSIDE

4.1 Preparation for lifting

We have been making structural preparations for the removal of the Brent Delta topside since the summer of 2014. Some fixtures and fittings will be removed to allow the lifting beams to be positioned and the underdeck of the MSF will be strengthened with additional steel to bear the forces that will be exerted in the single lift. The whole structure will be checked for loose or damaged items and components, and these will either be repaired or removed.

4.2 Cleaning of topside process facilities before removal

The topside process systems will be drained, purged and vented (via the cold flare system), as appropriate, to ensure no pockets of hydrocarbon liquid or gas are present. As a safety measure, additional vents may be created at selected locations in the topside process system to ensure they are not recharged from any trapped inventories. All drained systems will be left open to the atmosphere to allow free-venting to occur so that gases do not build up.

We know that residual material may accumulate in 'dead legs' (such as the bends of pipes) but we do not expect large quantities to be present and by virtue of their location such residual materials are not likely to escape during lifting or transportation. If, for operational reasons, a system cannot be fully drained (e.g. the final diesel inventory), the locations and quantities of fluids will be clearly recorded. We will put in place a procedure to monitor all potential leak sources that are created as a result of preparing the topside for removal; each potential source will be monitored for a specified period of time to demonstrate that it is safe.

Every tank or vessel will be sampled and the results of any such analyses will be incorporated into the materials inventory, which will be issued to Able so that they are aware of the materials that will be present on the topside when it is received onshore. The majority of lubricating ('lube') oils will be removed and shipped to shore for disposal but oils within sealed systems will be left because (i) they are present in only small quantities and, (ii) their removal would involve breaking open systems which could damage the equipment and result in it being scrapped instead of reused. Because the volumes involved are small and systems will remain closed there is a very small risk of spillage.

We will implement 'positive isolation' to prevent any remaining hydrocarbons from migrating between different systems or areas of the platform. This means that, at important or critical locations, pipework and systems will be severed and blanked-off to create a physical air gap between components. All vessels will be closed-off thus isolating all inlets and outlets, and the doors of the modules will be opened. The topside process systems will then be monitored to ensure personnel can work safely and that risks to the environment are reduced to a level that is As Low As Reasonably Practicable (ALARP).

All drain points will be sealed and connected via a flexible hose and a valve to a collecting tray. Appropriate sections of the platform's drains system will be closed and monitored daily until no fluids are discharged when the valves are opened. Any liquids collected in the trays will be transferred to tote tanks (transportable containers) and shipped to shore for disposal. Any remaining chemicals will be collected in tote tanks and shipped to shore for disposal, along with any remaining lube oils in tanks and machine pipework. The main sources of lube oils will be the generators, and large pumps, motors and gearboxes.

On completion of the topside cleaning operations a final oil export run will be undertaken to ensure that as much as possible of the bulk oil inventory has been removed from the GBS before the topside is lifted away.

4.3 Removal of conductors and pipework

The topside is linked to the GBS caisson by pipework in the utility leg and by conductors in the two drilling legs. All these connections are currently being severed at approximately +16m LAT, slightly below the cut height on the concrete legs. The upper parts of the conductors are being retrieved and recycled onshore, and this will allow a scaffold work-platform to be installed inside the top of each leg for the deployment of the diamond wire cutting (DWC) machine that will cut the legs.

4.4 Cutting the legs

The topside is fixed to the tops of the legs by 5.5m long steel transition pieces located at +19.8m LAT, just above the ring beam at the top of the concrete legs (Figure 4.1). To separate the topside, a DWC machine deployed inside the legs will be used to cut through the grout and the bolts that secure the transition pieces to the ring beams (Figure 4.2). To make the cuts, holes will be drilled at intervals around the wall of the leg so that the wire of the DWC can be passed out and round a section of the leg wall (Figure 4.3). As each section of wall is cut steel spacers ('shims') will be placed in the cut to maintain the gap and prevent the DWC from jamming. All of this work will be carried out from the scaffold platform inside the top of each leg, but abseilers will be used to pass the diamond wire back through the holes to create the wire loop. After the cuts have been made, the topside will be held safely in place by a combination of friction and the use of shear restraining supports bolted inside the legs.

Figure 4.1 Location of the cut line at the top of the concrete leg.

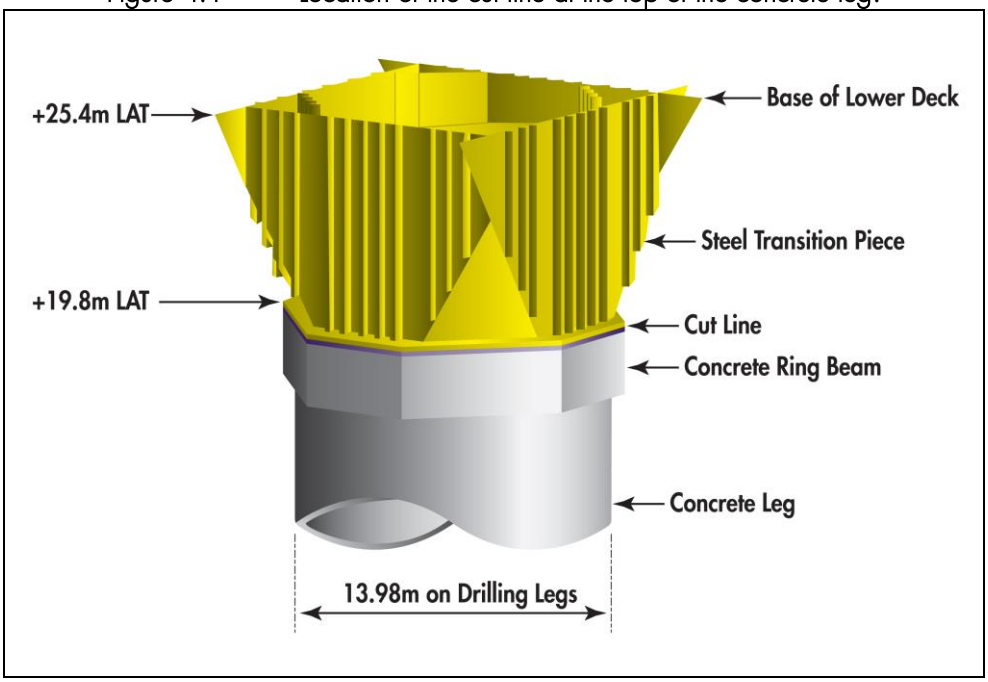

Figure 4.2 Cross-section through the top of a leg and ring beam.

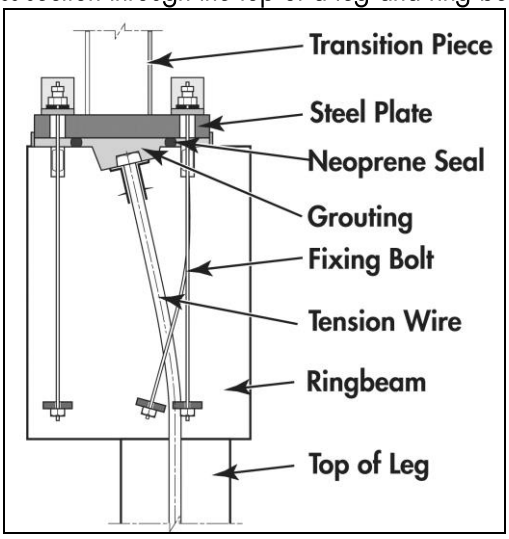

Figure 4.3 Using a diamond wire cutting machine on concrete.

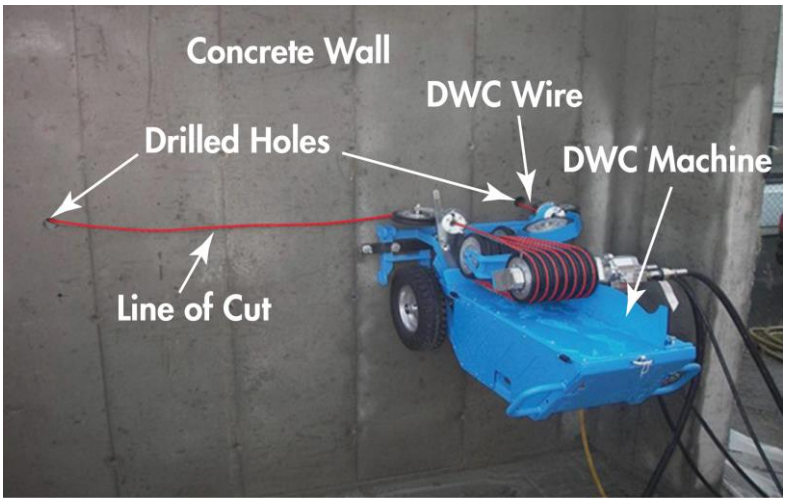

4.5 Lifting the topside

The Brent Delta topside will be lifted from the GBS as a single piece by the SLV *Pioneering Spirit*. After the legs have been cut and a suitable weather window has been identified, the SLV will enter the Brent Field and lift off the topside in an operation planned to take about 2 days.

The SLV will be stationed beneath the topside and the 16 large lifting beams of the Topside Lifting System (TLS) (paired into 8 fork-lift units) will be positioned under the prepared lift points on the underside of the MSF (Figure 4.4). Each fork-lift unit is fitted with a yoke (lifting pad) that fits onto one of the topside lifting points and is then kept positively in touch with the topside by a hydraulic system that compensates for the movement of the vessel.

When all the beams and yokes are in place the SLV will be progressively deballasted so that it takes nearly all of the topside weight. The final lift, to take the topside clear of the tops of the legs, will be accomplished in less than one minute by a combination of a hydraulically-actuated upward thrust of the yokes and deballasting of the SLV.

Figure 4.4 Lifting the Brent Delta topside using the SLV *Pioneering Spirit.*

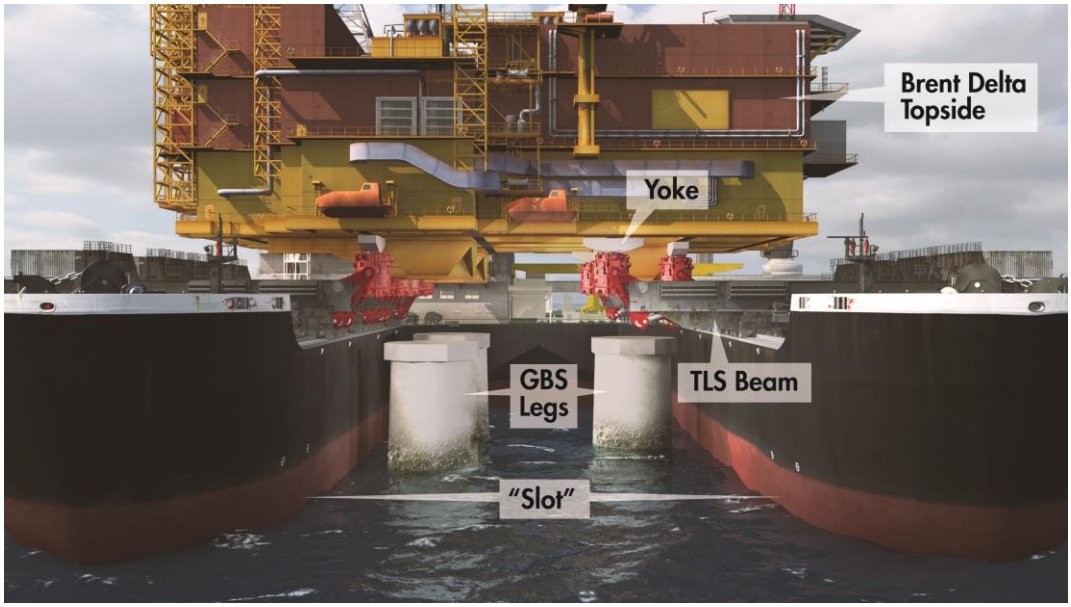

4.6 Fitting navigation aids and condition of the Brent Delta GBS after removal of topside

After the topside has been removed the GBS will be left with all three legs protruding 19.8m above the sea. The attainment of this condition does not pre-judge the outcome of the CA that is being performed on the technically feasible options for the decommissioning of the Brent Delta GBS.

Once clear of the GBS legs the topside will be secured on the SLV. We currently plan to then reposition the SLV so that its cranes can fit concrete caps onto the open end of each leg. The caps will weigh approximately 300 tonnes and one of them will be pre-fitted with Aids to Navigation (Figure 4.5), designed to operate remotely and to be able to be maintained/changed-out by helicopter without any need for personnel to be put onto the leg. If, for any reason, the caps and/or the Aids to Navigation cannot be fitted at this time, a guard vessel will take up station close to the Brent Delta GBS to alert shipping until such time as the Aids to Navigation are in place and fully functional. The decommissioning of the Brent Delta GBS itself will be included in the *Brent Field DP* which will cover all the remaining platforms and subsea structures in the Brent Field. The 500m radius safety zone around the GBS will remain in place.

Figure 4.5 Condition of the Brent Delta GBS after removal of the topside.

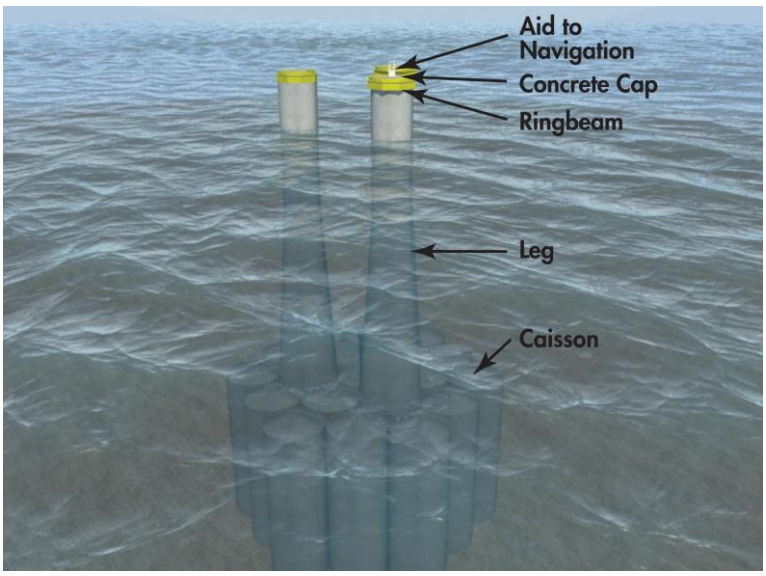

4.7 Transportation to shore

The topside will be carried on the SLV (Figure 4.6) to the estuary of the River Tees some 388 nautical miles from the Brent Field (Figure 4.7). The SLV will proceed under her own power and this voyage is planned to take less than one week.

At a nearshore site approximately 5.5 nautical miles from the mouth of the River Tees, centred on 54°44.0' N 01°06.0' W in a water depth of 35m, the topside will be loaded onto a new cargo barge for transportation to Quay 6 of the ASP facility. Here it will be skidded (slid) from the barge onto prepared support structures on the quayside (Figure 4.8).

Figure 4.6 Transporting the Brent Delta topside on the SLV *Pioneering Spirit*.

Figure 4.7 Location of the transfer site off the River Tees.

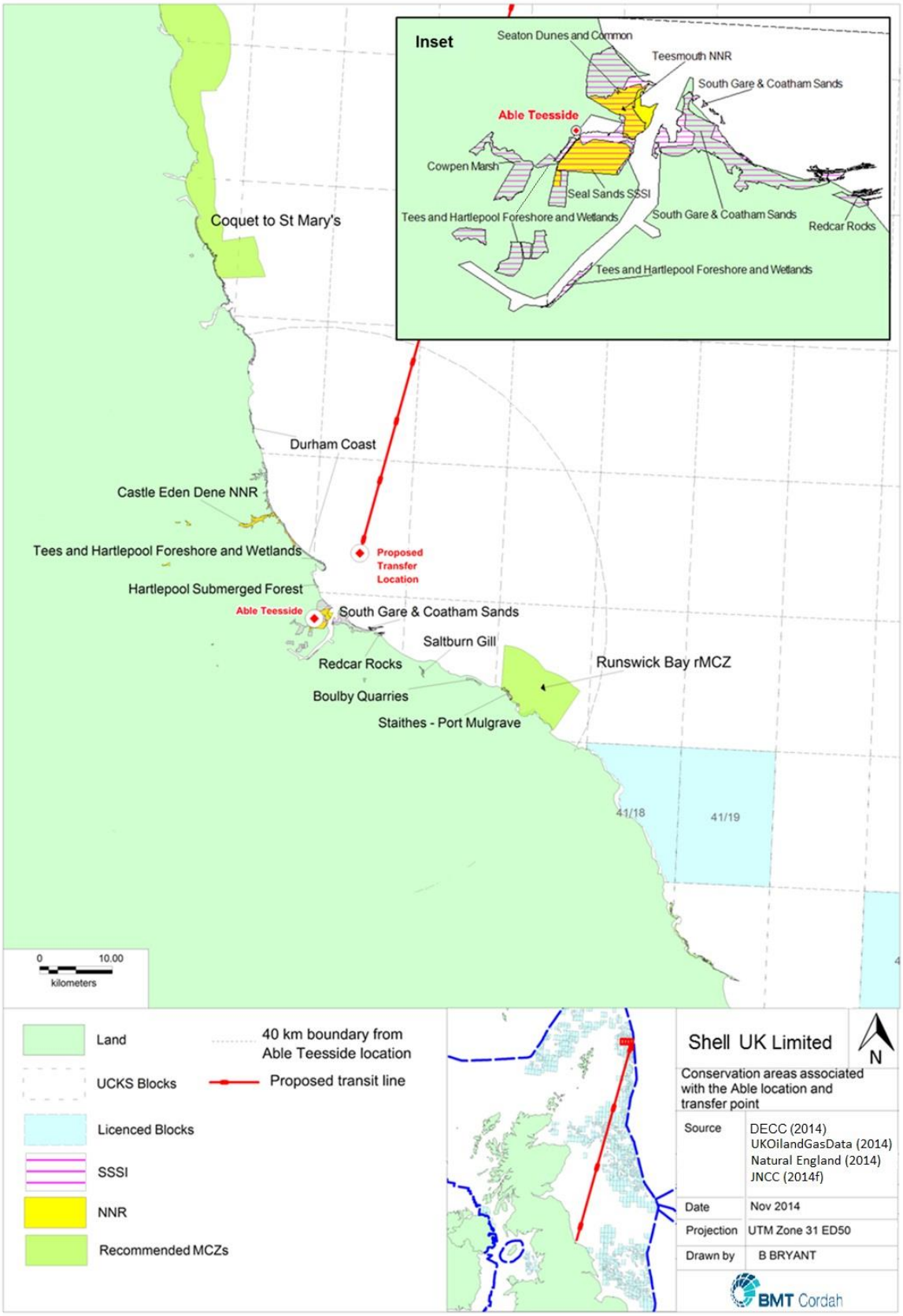

Figure 4.8 Skidding the Brent Delta topside from cargo barge to Quay 6 at the ASP facility.

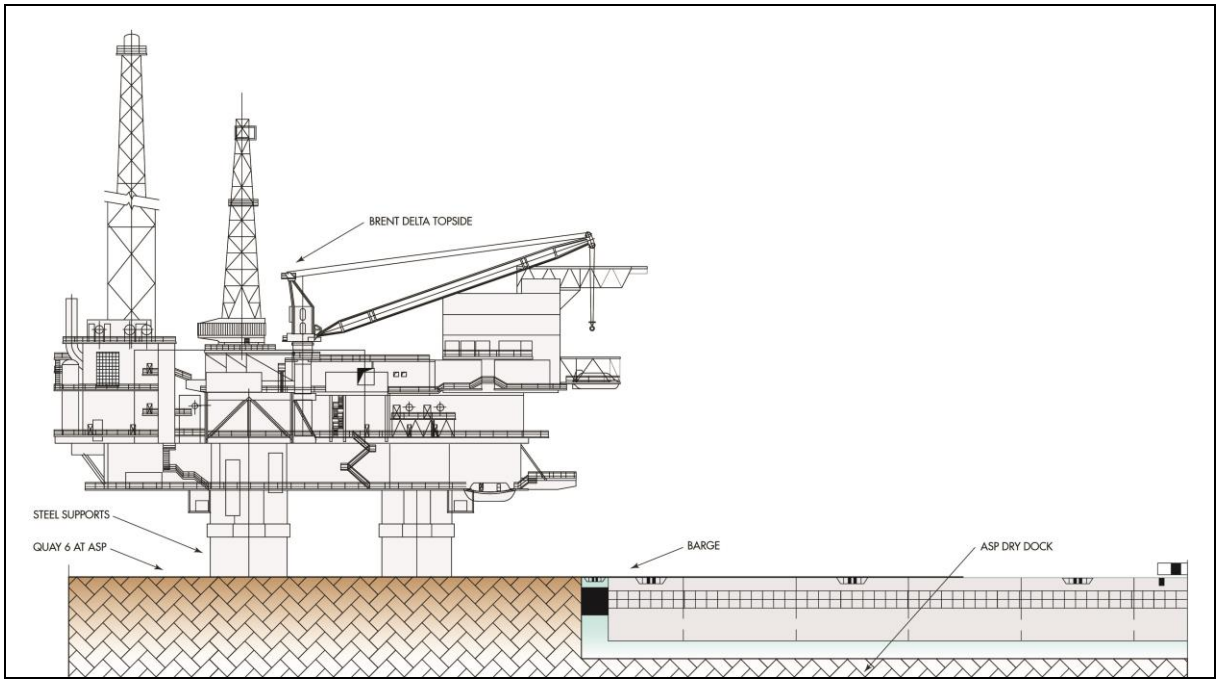

4.8 Dismantling at the ASP facility

The removal of the topside in a single piece by the SLV will enable all the detailed surveys, inspections, cleaning and dismantling that would have been required offshore for a modular dismantling programme to be carried out more safely and more efficiently onshore.

The dismantling and disposal will be managed by our contractor Able, who were selected after an extensive competitive tendering exercise involving several UK and Norwegian yards; the assessment included but was not limited to their historic performance, demolition engineering capabilities and current management systems and procedures. Able have dismantled, demolished and recycled offshore modules for various operators in the UKCS including Shell and BP.

The dismantling work will be carried out at Quay 6 of the ASP facility which is located on the Seaton Channel off the River Tees Turning Circle, Hartlepool, England (Figure 4.9). The ASP facility covers 51 hectares (126 acres) including a 10 hectares (24.7 acres) deep-water basin/dry dock and 306m of quay frontage. The facility has a wide range of plant and equipment including multi-wheeled heavy lift transport, forklift trucks, cranes, portable man lifts and lifting equipment. It can process up to 300,000 tonnes of offshore structures each year and its services and supporting infrastructure can sustain a workforce in excess of 2,000.

Figure 4.9 The ASP facility on the Tees estuary.

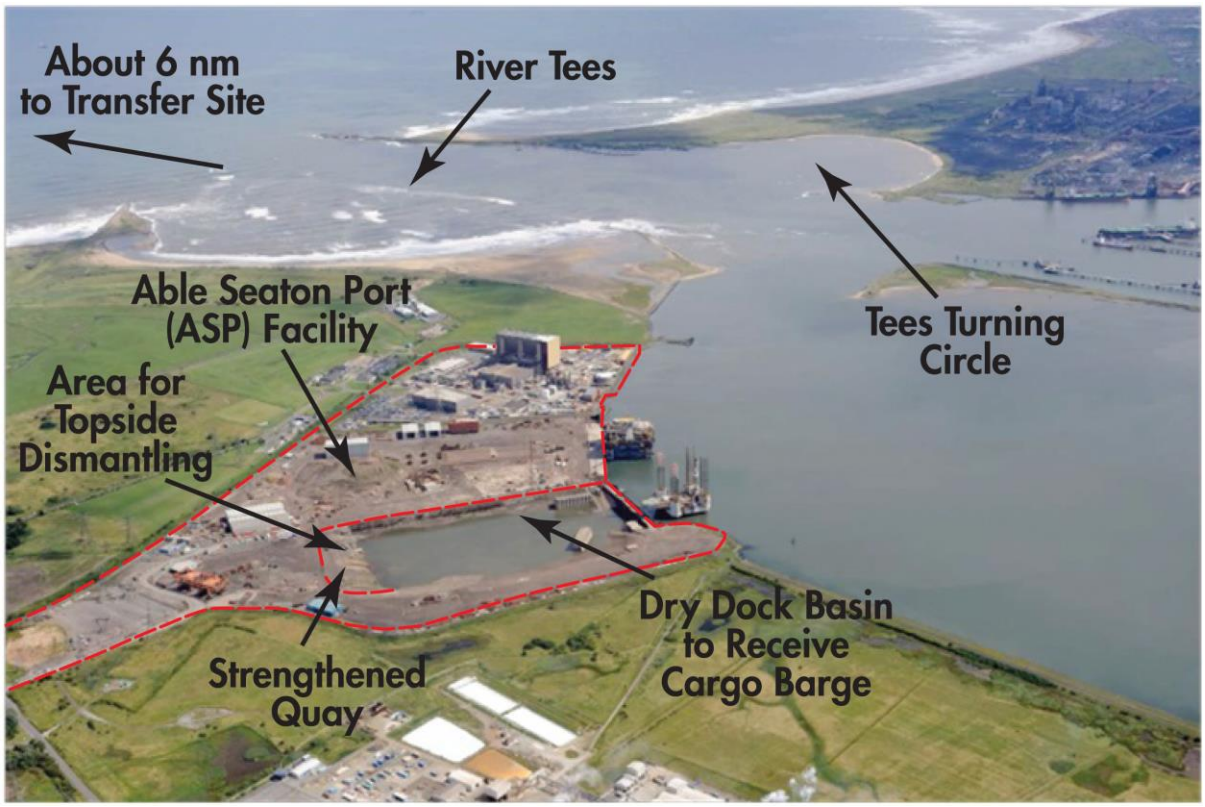

The ASP facility can handle all the different types of materials and waste streams that will be present on, or generated by the dismantling of, the Brent Delta topside. The ASP facility will be fully licensed for all the activities that may be involved in handling, dismantling, treating and disposing of the Brent Delta topside.

The essence of the programme of work proposed by our dismantling and disposal contractor Able is to quickly reduce the height of the topside by cutting it into sections and pulling the sections to the ground where it will be safer and easier to dismantle them. In this 'cut and pull' method, the internal and external walls will be partially cut then connected by wire ropes to a large vehicle on the ground (for example an excavator). This will then slowly move away, forcing the section to part from the topside and fall in a controlled manner into a designated drop zone. A thick bed of sand will be laid around the topside to absorb the shock of these falling sections.

Cut and pull is well-proven as the safest method for topside demolition and dismantling, particularly since it minimises the numbers of man-hours spent working at height. Once on the ground, removed sections of topside will be dismantled using a mixture of 'hot' and 'cold' cutting techniques, reducing the topside to small pieces that can be handled, stored and then transported to appropriate recycling sites.

4.9 Management and Disposal of Waste Streams

All of the Brent Delta topside material will be taken to the UK where it will be processed, treated and disposed of by licensed contractors with all the necessary permits and consents. Table 4.1 summarises the removal and disposal methods that will be employed for the main materials.

The principles of the waste management hierarchy will be observed throughout the dismantling and disposal of the Brent Delta topside. We will seek opportunities to re-use materials, components and equipment but where this is not possible the materials will be recycled. We aim to recycle at least 97% by weight of the topside material retrieved to shore.

Table 4.1 Methods for Managing Waste Streams	
Waste Stream	Removal and Disposal method
Steel	Steel will be removed by dismantling, or by hot (oxy-propane flame) or cold (hydraulic shears) cutting. Processed material will be stored adjacent to the processing area or loaded into dump trucks and delivered to the processed scrap storage area on the ASP facility. Scrap metals will be transported by road, rail or sea to suitably-licensed facilities for processing.
Hydrocarbons	Any petroleum hydrocarbons discovered within the pipework, equipment, vessels or tanks will be drained into suitable receptacles and sent to a licenced facility for recycling or disposal.
NORM/LSA Scale	During the dismantling operations radiation monitoring will be undertaken on any module or structure that is known or suspected to contain naturally-occurring radioactive materials (NORM). If monitoring reveals the presence of low specific activity (LSA) scale, a detailed method statement for the removal of the component or pipe will be prepared. This may involve encapsulating any open ends and transferring the item to the Hazardous Waste Store at the ASP facility pending off-site disposal or further processing.
Asbestos	Following a period of onshore survey, all asbestos will be removed by specialist contractors wearing appropriate protective clothing and respiratory equipment. This will be completed as part of a 'soft strip' programme that will be undertaken before dismantling of the topside begins. All asbestos materials will be disposed of in sealed containers at the adjacent licensed landfill site owned and operated by Able.
Other hazardous wastes	All such wastes will be disposed of under appropriate permit(s).

4.10 Effects of proposed topside programme on other Brent structures and facilities

The proposed removal of the Brent Delta topside will not have any implications for, or effects on, any subsea installations or stabilisation features associated with any of the Brent platforms, or the two pipelines running from Brent Delta to Brent Charlie (PL044, 24" gas export; PL046, 20" oil export). Both these pipelines will be decommissioned at a later date in accordance with the separate *Brent Pipeline DP* that will be submitted as part of the wider documentation for the decommissioning of the remainder of the Brent Field facilities.

5 ENVIRONMENTAL IMPACT ASSESSMENT

5.1 Environmental sensitivities

The decommissioning of the Brent Delta topside will be undertaken within several 'environmental settings' - the offshore environment of the Brent Field, the tow route to Teesside, the nearshore transfer site off the River Tees and the ASP facility at Teesside. Table 5.1-5.3 summarise the sensitivities of these environments.

Table 5.1 Environmental Sensitivities in the Brent Field

Environmental Receptor	Main Features
Conservation interests	There are no known Annex I habitats in the Brent Field area. Of the four Annex II species only the harbour porpoise has been sighted in the Brent Field area, with low abundance in February, from April to September and in December.
Seabed	The only significant seabed features are the Brent platforms, associated pipelines and drill cuttings piles. Surveys at Brent Delta indicate elevated concentrations of hydrocarbons in seabed sediments up to 250m from the platform and elevated concentrations of heavy metals at distances up to 330m. Benthic communities in the Brent Field area are similar to those found throughout a large surrounding area of the northern North Sea.
Fish	The Brent Field is located in spawning grounds for cod (January to April), haddock (February to May), Norway pout (January to April), saithe (January to April), sandeel (November to February) and whiting (February to June), and within nursery grounds for anglerfish, blue whiting, European hake, haddock, herring, ling, mackerel, Norway pout, sandeel, spurdog and whiting (throughout the year).
Fisheries	The relative value of commercial fisheries in ICES rectangle 51F1, in the Brent Field area, is 'Moderate' to 'Low'. Fishing effort in 51F1 is 'Low' and dominated by demersal gear types.
Marine Mammals	Marine mammal species occurring in the Brent Field area are harbour porpoise, killer whale, minke whale, sperm whale, white-beaked dolphin and white-sided dolphin. The majority of sightings have occurred during spring and summer.
Birds	Seabird vulnerability to oil pollution in the Brent Field area (Block 211/29 and adjacent blocks) is 'High' in January, March and July, and between September and November. The overall vulnerability in the area is 'Low'.
Other Users of the Sea	Shipping density in the Brent Field ranges from low to very low.
Atmosphere	Local atmospheric conditions are influenced by the day-to-day operations of the Brent Alpha, Bravo, Charlie and Delta platforms and associated vessels.

Table 5.2 Environmental Sensitivities along the tow route and at the transfer site	
Environmental Receptor	Main Features
Conservation interests	The transit route passes twelve offshore conservation areas and directly through one conservation area, the NE of Farnes Deep Marine Conservation Zone (MCZ). This MCZ protects a large area with a variety of seabed sediments and a wide range of associated species. The MCZ is not cited to be of particular importance to marine mammals. The route passes across seabed sediments exhibiting a wide range of associated seabed species including ocean Quahog, seapens and burrowing fauna. The transfer site is outside but close to areas of potential Annex 1 sandbank and reef habitats. Numerous conservation areas are present within a 40km radius of the centre of the proposed transfer site (Figure 4.8). The transfer site is approximately10km from both the Teesmouth and Cleveland Coast Special Protection Area (SPA) and Ramsar site, and the Teesmouth National Nature Reserve (NNR). Along the coast to the north are the Durham Coast Site of Scientific Interest (SSSI), Hart Warren SSSI, Castle Eden Dene NNR, Tees and Hartlepool Foreshore and Wetlands SSSI and Hartlepool Submerged Forest SSSI. On the coast to the south are Redcar Rocks SSSI, Staithes–Port Mulgrave SSSI and Runswick Bay MCZ. There are several other designated sites located within the Tees estuary. The Annex II species harbour porpoise has been sighted in the area throughout the year along with both grey and common seals.
Seabed	Sublittoral sand (classified as A5.2 in the European Nature Information System) dominates the sediments in the nearshore waters along the route to the transfer site. Sediments from the transfer site to the ASP facility range from Atlantic and Mediterranean moderate energy circalittoral rock (A4.2) to Atlantic and Mediterranean low energy infralittoral rock (A3.3).
Fish	The transfer site is in ICES rectangle 38E8 which is within spawning grounds for lemon sole (April-September) and *Nephrops* (January-December), and nursery grounds for whiting, cod, herring, plaice and spurdog [6].
Fisheries	The transit route passes through several fishing grounds and the area around the transfer site is of 'Low' to 'High' relative value for fishing. Fishing effort is 'Low' to 'Moderate' and is dominated by demersal and shellfish fisheries [7].
Marine Mammals	Harbour porpoises, white-beaked dolphins and white-sided dolphins have been sighted in the area throughout the year. The Teesmouth NNR is the site of the only regular breeding colony of common seals on England's north-east coast. Seal densities near the transfer site are expected to be higher during the pupping and breeding season (June to July for common seals and October to December for grey seals).
Birds	The Teesmouth and Cleveland Coast SPA and Ramsar site is approximately 10km from the transfer site and is designated to protect breeding, passage and wintering populations of birds including the Annex I species little tern and Sandwich tern. Over 1% of the biogeographic population of various migratory species use the site.

Table 5.2 Environmental Sensitivities along the tow route and at the transfer site, *continued*	
Environmental Receptor	Main Features
Other Users of the Sea	The transit route passes through areas of existing dense activity associated with both offshore oil and gas and renewable energy. This comprises both surface structures (wind farms, platforms, drilling units) and subsurface structures (pipelines, umbilicals, manifolds, wells). The closest surface infrastructure to the proposed transfer site is the Teesside wind farm, located approximately 2km to the south-east. The route from the nearshore transfer site to the ASP facility will cross over the Ekofisk 2/4J to Teesside pipeline, but the transfer site itself has been selected to avoid this line. Shipping density along the transit route ranges from very low to high, with shipping traffic highest close to the proposed transfer site. Shipping traffic along the route is expected to comprise mainly oil and gas support vessels. Shipping traffic is considered to be high within the nearshore waters close to the transfer site and the ASP facility. The transfer site has been selected to avoid the main shipping approach lanes for the Tees and Hartlepool Marina.
Atmosphere	Atmospheric conditions along the transfer route are expected to be influenced by oil and gas platform operations and shipping. Nearshore atmospheric conditions are expected to be influenced by high levels of shipping activity and industrial activity around Teesside.

Table 5.3 Environmental Sensitivities in and around the ASP facility at Teesside	
Environmental Receptor	Main Features
Conservation interests	The ASP facility is located on the north side of the Tees estuary adjacent to the Teesmouth NNR, an important seal haul out and breeding site (Figure 4.8). The Teesmouth NNR is divided into two areas (i) the northerly area which overlaps the Seaton Dunes and Common SSSI (including the North Gare dunes and grazing marsh areas) and a small portion of the Seal Sands SSSI, and (ii) the southerly area which overlaps the Seal Sands SSSI. Cowpen Marsh and a small portion of the Tees and Hartlepool Foreshore and Wetlands SSSI lie to the west of the NNR. These sites are part of the Teesmouth and Cleveland Coast SPA and Ramsar site which provides internationally important habitats for migratory and wetland bird populations; the intertidal and sub-tidal areas of the SPA are designated as the Teesmouth and Cleveland Coast European Marine Site (EMS). The estuary area also includes the South Gare and Coatham Sands SSSI.
Seabed	The ASP facility is located on the sheltered Seaton Channel off the River Tees estuary. It covers 126 acres and includes a 25 acre deep-water basin/dry dock. The heavily industrialised estuary area around the ASP facility is surrounded by a variety of habitats including sandy, muddy and rocky foreshore, dunes, saltmarsh, freshwater marsh, seawalls, and extensive areas of intertidal mudflats.
Marine Mammals	Annex II common and grey seals haul out on the sand banks at the Teesmouth NNR at low tide. This area has the only regular breeding colony of common seals on England's north-east coast.

Table 5.3 Environmental Sensitivities in and around the ASP facility at Teesside, *continued*	
Environmental Receptor	Main Features
Birds	The Teesmouth and Cleveland Coast SPA designation includes protection for the Annex I species little tern and Sandwich tern. In summer (April to August) little terns breed on the beaches along the Teesmouth and Cleveland Coast. Sandwich terns are abundant in the SPA on passage. During winter (October to March) the coastal habitats provide feeding and roosting opportunities for over 20,000 water birds. The SPA is used regularly by more than 1% of the biogeographic population of certain migratory species such as knot, redshank and ringed plover [8]. The SPA is also home to nationally important populations of cormorant, shelduck, teal, shoveler, ringed plover and sanderling.
Onshore Communities	Much of the area surrounding the ASP facility is industrial; the site is adjacent to Hartlepool Nuclear Power Station and close to the Huntsman Dioxide chemical plant, sewage works, industrial estates and oil storage depots. The site includes the Teesside Environmental Reclamation and Recycling Centre (TERRC) and is within 0.2km of the Seaton Meadows hazardous waste landfill site. The nearest residential area is 1.7km away at Seaton Carew, south west of Hartlepool.
Other Users of the Sea	The River Tees estuary is a busy area for commercial shipping and is also used for recreational sailing and boating.
Atmosphere	The ASP facility is situated within an area of heavy industry, with large amounts of CO_2 (>10,000t/year) emitted from the surrounding sites including the Huntsman Dioxide chemical plant and the Seaton oil storage depot. There are no reports of high levels of dioxins, nitrogen oxides or particulates (PM10) emitted annually and both the ASP facility and surrounding sites have generally good levels of compliance with air quality permits. The nearest significant source of air pollution is the A1085 dual carriageway on the south side of the Tees estuary [10].

5.2 Summary of Environmental Impact Assessment

DNV GL assessed the significance of potential impacts by examining (i) the sensitivity of the receptor(s) that would be affected and (ii) the severity of the impact that would occur. Table 5.4 presents definitions of the significance categories they used. The areas indicated below are a guide and are not definitive. Underwater noise (where relevant) will have minor temporary disturbance impact at much greater distances, for much shorter periods of time.

Table 5.4. Definitions of significance of environmental impacts.	
Category	Definition
Large negative	An impact that may affect regional populations, ecosystems or local populations of high value environmental receptors. Additional mitigation is necessary.
Moderate negative	A local and reversible impact, which affects only individuals or local populations of non-unique species, and may include some lethal effects to non-unique organisms. If there is any contamination of the environment, the concentrations arising do not exceed legislative thresholds (if any). The impact will occur over a larger area (typically 1,000,000m^2 or 1 square kilometre) or over a greater time period (a decade) than impacts categorised as 'small-moderate' negative. Additional mitigation may be recommended to minimise residual impacts further.
Small-moderate negative	A local and reversible impact, which affects only individuals and may include some lethal effects to non-unique organisms. If there is any contamination of the environment, the concentrations arising do not exceed legislative thresholds (if any). The impact will occur over a larger area (typically 10,000m^2 or 1 hectare) or over a greater time period (several years) than impacts categorised as 'small' negative. Large quantities of waste may be generated. Additional mitigation may be recommended to minimise residual impacts further.
Small negative	A minor localised and reversible impact (typically 100m^2 or less) which affects only individuals and may include some lethal effects to non-unique organisms. The impact will typically occur for less than 1 year, and if there is any contamination of the environment, the concentrations arising do not exceed legislative thresholds (if any).
Insignificant / No impact	An impact with negligible effect, or no effect. It may result in changes to the environment or local populations that are indistinguishable from natural variations that occur from time to time, which are fully reversible and have no long-term detrimental effects on local populations or ecosystems.
Positive	An impact that provides some beneficial effect.

There will be some short-term and localised impacts as the result of the planned programme of work to decommission the Brent Delta topside but none has been assessed as being greater than 'small negative' significance. No 'small-moderate negative', 'moderate negative' or 'large negative' impacts are predicted for any receptor.

Small negative impacts have been predicted from underwater noise, onshore disturbances from dismantling (noise, dust, traffic and visual impacts), handling of hazardous substances during dismantling, and energy consumption and atmospheric emissions from recycling. Impacts to the marine environment are considered to be 'small negative'. The two main contributors to the impact are underwater noise and the risk of corkscrew injuries to seals in and around the nearshore transfer site; there is a small probability that seals could be injured if they swim too close to the SLV thrusters. Mitigation measures have been identified to manage all the potential impacts and these will be added to the Health, Safety, Security, Environmental and Social Performance (HSSE & SP) activity plan for the project. Some potential impacts have been identified from two accidental events - oil spills and dropped objects - but given the very low probability that such events would occur, the short duration of nearshore activities, and the careful planning and management that will be exercised before and during these phases of the removal operation, we have concluded that the

likelihood of such impacts is very low and ALARP. DNV GL assessed the overall impact of all accidental events as being 'small negative'. Positive impacts have been identified from the planned recycling of materials and the opportunity for additional employment. No significant long-term negative impacts are expected from the successful completion of the planned programme of work.

In terms of potential cumulative impacts, there will be some small additional onshore impacts from the planned decommissioning of the Brent Alpha jacket and the Brent Alpha, Brent Bravo and Brent Charlie topsides at the ASP facility over the projected 10+years schedule for decommissioning the Brent Field. These are expected to be similar in nature and scale to those identified for the Brent Delta topside. However, it is not likely that impacts onshore from the various platforms will be cumulative because the individual removal and disposal operations will be sequential rather than concurrent and will be spaced over a number of years.

5.3 Management of environmental impacts

Table 5.5 summarises the main potential environmental impacts of the proposed decommissioning programme for the Brent Delta topside and how they will be managed.

Table 5.5 Management of environmental impacts	
Main Impacts	Management
PLANNED OPERATIONS AND ACTIVITIES	
Separation and Removal of topside by SLV	
• Underwater Noise: The underwater noise originating from the presence and movements of the vessel 'spread' around the Brent Delta platform might result in a 'small negative' impact to marine mammals. These noises could cause temporary disturbance to individual cetaceans within 1-2km of the platform, which would cease as soon as the vessels moved away. Since the removal operations will take only a few days, and cetacean numbers are likely to be low in the Brent Field, only a few individual animals are likely to be disturbed in this way. Since the cutting operations themselves will be in air, it is not thought likely that any noise from the DWC transmitted into the sea via the legs would add significantly to the source noise levels originating from the vessels. • Energy consumption and atmospheric emissions: The fuel consumed and the atmospheric emissions generated during removal might constitute 'small negative' impacts.	• Vessels will be well maintained to ensure efficiency and to minimise underwater noise. • Removing the topside in a single lift will reduce the time required for in-field vessels and transits, with subsequent reductions in energy use, emissions and underwater noise. • All vessels will use low-sulphur marine diesel.
Transportation to nearshore transfer site	
• Underwater Noise: The transit of the SLV will create underwater noise that may result in a 'small negative' impact due to disturbance to marine mammals within about 1km of the route. Individual cetaceans, and nearer the coast, seals, may exhibit avoidance behaviour, but this will cease once the vessel passes. • Energy consumption and atmospheric emissions: The fuel consumed and the atmospheric emissions generated during transit to the transfer site might constitute 'small negative' impacts.	• The SLV will be well maintained to ensure efficiency and to minimise underwater noise. • All vessels will use low-sulphur marine diesel.

Back-loading to barge and tow to ASP facility	
• Underwater Noise: The presence of the SLV and the tugs at the transfer site will create underwater noise that may result in a 'small negative' impact due to disturbance to marine mammals within about 1-2km of the site. Individual cetaceans and seals may exhibit avoidance behaviour, but this will cease once the transfer is complete and the vessels have moved away.	• Vessels will be well maintained to ensure efficiency and to minimise underwater noise.
• Risk of injury to seals: When the SLV is on station at the transfer site, it is predicted that the use of thrusters might result in a 'small negative' impact as a result of injury to individual seals.	• Following a detailed risk assessment and discussion with stakeholders, Shell will consider the use of marine mammal observers and seal scarers during the 48-hr period of near-shore operations when the SLV is stationary and held in position using dynamic positioning thrusters.
• Energy consumption and atmospheric emissions: The fuel consumed and the atmospheric emissions generated during operations at the transfer site and during the short tow to the ASP facility might constitute a 'small negative' impact.	• All vessels will use low-sulphur marine diesel.
Dismantling topside in ASP facility	
• Onshore disturbance from noise, dust and traffic and visual impacts: It is estimated that the combined effects of additional noise, dust, traffic and visual impacts from the dismantling of the topside would result in a 'small negative' impact to the local community. The effects are expected to be small because the dismantling site at Quay 6 is more than 1km from the nearest residential receptor and more than 0.5km from the Teesmouth and Cleveland Coast SPA and Seal Sands. Some impact is predicted, however, due to the sustained nature of operations at the facility over the course of 1 year.	• The ASP facility will be fully licensed to receive decommissioning wastes and all work will be conducted under the necessary permits and consents. • Under normal operations all dismantling work will be undertaken during daylight hours and there are unlikely to be any 24 hour operations. • A thick bed of sand will be used during the 'cut and pull' operations to reduce the potential noise effects of the dismantling of large sections of the topside. • Dust will be managed and controlled through the use of water sprays, sweeping vehicles, speed limits on site and where necessary cleaning of traffic wheels leaving the site. • Shell will ensure a Duty of Care assurance programme is in place to monitor the management of the ASP facility and ensure all appropriate controls are in place and complied with. • The ASP facility will be audited by a third party to ensure compliance with its stated management systems.
• Employment: Since the onshore component of the decommissioning programme will support approximately 1,036 man-years of work, this effect on employment is categorised as a 'positive' impact.	

Handling, storage and recycling of topside material	
• Hazardous wastes: Moving, handling and storing hazardous waste may give rise to impacts that are categorised as 'small negative'. • Energy consumption and atmospheric emissions: The consumption of energy (approximately 214,000GJ) and the generation of atmospheric emissions (approximately 10,000t CO_2) as a result of the recycling of topside materials are categorised as 'small negative' impacts. • Recycling of steel: The planned recycling of approximately 21,700t of steel from the topside is assessed as being a 'positive' impact.	• The ASP facility will be fully licensed to receive decommissioning wastes and all work will be conducted under the necessary permits and consents in line with regulatory requirements. • A waste map and management plan will be implemented by Able and approved by Shell, to ensure adequate management and disposal of hazardous wastes. • Shell will ensure a Duty of Care audit programme is in place to monitor the management of the site and to ensure all appropriate controls are in place and complied with; this will include waste management and monitoring. • The ASP facility will be audited by a third party to ensure compliance with its stated management systems. • Pre-dismantling surveys will be undertaken at the ASP facility to assess the types and quantities of hazardous waste including mercury, asbestos, pyrophoric scale and NORM. When the surveys have been completed, specific plans will be updated and implemented to manage all hazardous wastes in line with legislative requirements and good practice. • Some topside pipework may be impregnated with mercury as a result of prolonged exposure to production fluids. If such pipework is found during onshore pre-dismantling surveys a mercury management plan will be implemented by Able to ensure safe management and disposal. • NORM waste 'Cleaning Acceptance Certificates' and where appropriate 'NORM Decontamination Certificates' will be completed to communicate the final condition of the topside, and to ensure that dismantling activities can be carried out safely. • Procedures at the ASP facility will include metering and monitoring for NORM contamination every time containment is broken (e.g. cutting of pipework). • NORM will be managed in line with OGP Guidelines for the management of NORM in the oil and gas industry [11]. • Able has been contracted by Shell to achieve a target level of 97% recycling of retrieved topside material.

Unplanned or Accidental Events

A Hazard Identification exercise (HAZID) has been carried out, covering; the removal of the Brent Delta topside by the SLV *Pioneering Spirit*, the transportation of the topside to a site outside the mouth of the Tees, and the transfer of the topsides to a barge. The short tow from the transfer site to the ASP facility and the load-in will be subject to a second HAZID scheduled for early 2015.

The first HAZID was attended by representatives from all relevant companies and disciplines including Allseas, Shell and DNV GL together with project engineering and technical safety, environment and marine departments. The HAZID covered the following stages of the topside removal and transportation process:

1. Manoeuvring and preparations at the offshore lift site
2. Topside Lift System preparations and lift
3. Remaining lifts and completion
4. Transportation on the SLV
5. Barge transfer preparations, manoeuvring of barge and transfer of platform topside

The objective of the HAZID was to assess high level controls and interface issues. An activity-specific guideword process was used to help review these issues. AllSeas will perform detailed risk assessments of the procedures to be used.

Several actions were generated from the HAZID but the overall conclusion was that suitable arrangements are being put in place to provide for a safe lifting and transportation process, although work is still ongoing to define the details of procedures to be applied and to provide independent assurance of the safety of the procedures and adequacy of the engineering controls to be applied. A 'small negative' impact from accidental events was determined due to a combination of the following:

Accidental Event	Mitigation
• Risk of a dropped object: During offshore cutting and lifting, there is a low probability that a part of the topside, or a component or part of the SLV would be dropped and land on the seabed.	• If it is known that small objects or components are accidently lost to sea during the removal of the Brent Delta topside they would be reported to DECC via a PON 2 notification and recovered where possible.
• Risk of topside toppling: During lifting and transportation offshore there is an extremely low probability that the topside would topple or fall into the sea. If the topside toppled during lifting there is a possibility that it could damage some of the GBS cells and expose the cell contents, but this is considered to be an extremely unlikely event. • The risk of toppling during transit (i.e. once secured on the SLV) is even less likely. In the UKCS, accidents involving large dropped objects are very rare.	• By the time the Brent Delta topside is lifted there will be no live hydrocarbon pipelines at the Brent Delta Platform which could be impacted by a dropped object or toppled topside. • Shell and AllSeas will ensure that all safety testing is completed and warranties are in place before the topside lift begins. • All the vessels engaged in the lifting operation itself will be stationed within the platform's 500m safety zone.

• Risk of oil spill: During the whole operation to lift, transport and transfer the topside to the ASP facility there is a low probability that vessel collisions (with other vessels or with the GBS) may result in a spill of diesel fuel to sea. Modelling previously performed to support the Brent Field oil spill plan has been used to inform the assessment of the effects of a spill in the Brent Field. A spill of 2,695m^3 of diesel (a larger volume than is normally held in one fuel tank) could cross the median line within 3 hours but would be likely to disperse and evaporate within 9 hours and would not reach the UK or Norwegian coastlines (Shell, 2011). Along the transit route and at the transfer site it is also possible that an accident could damage a fuel tank on a supporting vessel. We modelled the risk from a spill of 200m^3 of diesel at the transfer site and this showed that there was a <1% probability of diesel fuel reaching the shore. • The SLV will also be carrying heavy fuel oil (HFO) for use in international waters. Except in the event of a catastrophic total loss of the SLV, it is considered extremely unlikely that any HFO would be spilled to sea.	• The fuel tanks on the SLV are surrounded by 3m of water ballast tanks (below and on the sides), and there are void tanks above. Therefore the SLV would have to be travelling at considerable speed for there to be sufficient energy for an impact from a vessel to the side of the SLV to penetrate both bulkheads. The manoeuvres of all vessels, both at the Brent Delta site and the nearshore transfer site, will be very carefully controlled and will be at low speeds. It is therefore not credible that the fuel tanks of the SLV could be punctured by an accidental event other than a catastrophic event leading to the loss of the vessel itself. • Once the topside is removed, it is planned that the legs will be capped and Aids to Navigation installed on one of the legs. If for whatever reason this cannot be done before the SLV leaves the Field, a guard vessel will be stationed at the Brent Delta GBS to warn shipping. Notices to mariners will be issued and the UK Hydrographic Office (UKHO) and Maritime and Coastguard Agency (MCA) informed of the changed status of the platform. The revised status of the Brent Delta structure will be entered into the FishSAFE programme of electronic warning. • The Brent Field System Oil Pollution Emergency Plan (OPEP) will be in place during lifting operations and Shell have a contract for specialist response services through Oil Spill Response Limited (OSRL) should a spill occur. Once the topside is secured to the SLV any spill of hydrocarbons will be managed through the vessel's Shipboard Oil Pollution Emergency Plan (SOPEP). Shell will have a bridging document in place with AllSeas to confirm all responsibilities and response arrangements. • Shell and AllSeas will ensure that all safety testing is completed and warranties are in place before the topside lift and transportation begins. • The Brent Field standby vessel will be in place throughout lifting operations and is equipped with dispersant for the field as detailed in the OPEP. • The topside will have been drained and vented before decommissioning; all open systems will be empty of free-flowing hydrocarbons and all chemical tanks will have been emptied, minimising the potential spill risk. • Lifting, transit, barge transfer operations and tow-in will be performed during good weather and sea states.

6 INTERESTED PARTY CONSULTATIONS

6.1 Introduction

In 2007, shortly after the announcement of the Brent Decommissioning Project (BDP), we began a programme of consultation with statutory consultees and stakeholders. The aims of this programme were to:

- Provide all interested parties with information about the BDP, the issues and concerns that we were addressing and the information we were acquiring.
- Create a means by which stakeholders could tell us of their concerns and views on any aspect of the BDP.
- Provide mechanisms for stakeholders to learn about, and discuss, the views and concerns of other stakeholders.
- Allow us to appreciate and understand our stakeholders' concerns, and take these into account when assessing the advantages and disadvantages of different options, and identifying recommended options.

We developed processes and tools for conducting a long-term consultation programme with stakeholders and these comprised five main elements:

- A public website, (www.shell.co.uk/brentdecomm).
- A regular e-newsletter, available from the website.
- Stakeholder dialogue meetings including, to date, 12 wide-ranging stakeholder meetings in London and Aberdeen and 5 specific meetings of a working group looking at options for the management of the GBS cell sediments.
- One-to-one meetings with individual stakeholders or stakeholder organisations.
- Presentations at conferences and meetings.

Two other important activities within the BDP supported this programme:

- The work of the IRG in reviewing our technical studies; and
- The publication of DNV GL's *Brent Decommissioning Environmental Impact Assessment Scoping Report* [6].

This section summarises the issues and concerns that stakeholders have raised with respect to topsides decommissioning, and the dismantling of structures and disposal of waste streams onshore. These are in the main general comments, since the majority of our dialogue to date occurred before we announced the specific removal method for topsides (SLV) or the specific site for dismantling (the ASP facility).

For ease of reference, the comments from stakeholders are presented under topic or subject headings rather than being linked to named stakeholders. On completion of the period of formal consultation, the specific questions from consultees and our responses will be presented in the final *Brent Delta Topside DP*.

6.2 Effects in the Brent Field of topside cutting and lifting by SLV

Issue	Response
Re-use of topsides.	Stakeholders noted that in the waste hierarchy re-use was preferable to recycling, and asked if we had explored this for topsides. Section 3.2.2 summarises the work we have performed to find alternative uses for the Brent platforms (including the topsides). We have not identified any commercially viable alternative use for the Brent Delta platform or its topside.
Structural integrity of aged deteriorating topside.	We have carefully surveyed, inspected and assessed the condition of the Brent Delta topside. Our surveys, inspection data and analyses confirm that, to allow the single lift to be undertaken, some strengthening is required at the eight locations where the yokes will contact the MSF; this work has started. We have surveyed the drilling derrick and the flare tower and confirmed that they are strong enough to be retained on the topside and be removed as part of the single lift. We have modelled the forces that would be exerted on the topside during transfer and as a result of the motion of the SLV in rough seas. We have defined the speeds that a SLV loaded with a topside should not exceed in various sea states.

6.3 Implications for management of material in GBS cells

Issue	Response
Stakeholders commented that the decommissioning of the topside should not have any adverse or negative implications or impacts on the management of material in the oil storage cells of the GBS.	Section 3.3.2 describes the work we have performed to examine if the topside could be used for managing any of the materials in the oil storage cells. We have concluded that the topside could not be used for the management of the GBS cell sediment. The removal of the topside will therefore not foreclose any technically feasible option for the management of the GBS cell sediment.

6.4 Monitoring GBS after removal of topside

Issue	Response
Monitoring the facilities (in this case only Brent Delta) after topside removal.	After topside removal, the GBS will be left with all three legs protruding above the sea (to approximately 19.8m above LAT). As described in Section 4.6 the SLV will fit Aids to Navigation on one of the legs before it leaves the Brent Field, or a guard vessel will take station until the Aids to Navigation can be fitted. The changed status of the GBS will be notified to the UKHO and the MCA and in Notices to Mariners. It will also be entered into the FishSAFE programme of electronic warning. Our current proposal, yet to be agreed with DECC, is that on completion of the whole Brent decommissioning programme, all the GBS will be subjected to an 'as left' structural survey, and then a post-decommissioning environmental survey (Section 7.6). The type and frequency of further surveys will be discussed and agreed with DECC and described in the *Brent Field DP*.

6.5 Effects of dismantling at onshore site

Issue	Response
Is the sensitivity of the onshore site taken into account for each facility and each treatment method?	Yes, the procedure we used to identify and select suitable sites for onshore dismantling and disposal fully considered the 'environmental setting' of each site, including environmental sensitivities in and around the area. The ASP facility will have all the necessary permits and licences to perform the dismantling operations, and manage, handle, store and transport the different materials and waste streams that will arise from the dismantling of the Brent Delta topside (Section 4.8). The work on the site and the impacts of all its operations are regularly assessed and reviewed by Natural England. The potential impacts on nearshore and onshore environments are discussed in the impact assessment (Section 5.2). The results of the impact assessment will as necessary inform our detailed plans for the management and control of nearshore and onshore operations, so as to mitigate potential environmental impacts. As we finalise our detailed plans for the reception of the Brent Delta topside in 2016, we will perform an independent Environmental, Social and Health Impact Assessment (ESHIA) of the proposed operations, from the barge transfer site to final recycling or disposal of all material (as described in 6.6 below).

6.6 Effects of handling, treatment and disposal of waste at onshore site

Issue	Response
Selection of appropriate onshore dismantling site	We conducted an extensive review of potential dismantling sites in UK and Europe that were capable of receiving the topside in a single piece. Our assessment took into consideration many factors such as water depth, availability of space for the dismantling process and the laying down and temporary storage of components and materials, facilities for handling and storing a wide range of potential waste streams, access to transport for moving materials on to recycling or disposal sites, record in dealing with large structures containing a range of hazardous and non-hazardous materials, proximity to settlements, and availability of trained and experienced personnel.
Socio-economic impacts of dismantling and waste handling on communities; need for engagement including with womens' groups.	The ASP facility is a large existing development with a track record of dismantling large structures. Able have an active programme of communication and interaction with the local community. The effects of onshore dismantling and disposal have been assessed in the environmental impact assessment (Section 5.2). As part of our preparations for receiving the Brent Delta topside at the ASP facility, however, we will shortly be performing a more detailed ESHIA. This will assess the environmental, socio-economic and health effects of the whole work programme, from the nearshore transfer site to final recycling or disposal of all material returned in the topside. As part of that work, the appointed independent consultants will be seeking the views of stakeholders and interested parties. The ESHIA is not required for regulatory purposes but it will be used to inform the detailed plans being developed by our contractor Able for the management of the whole dismantling and disposal process.
Recycling of materials and disposal of waste	Stakeholders noted that in the waste hierarchy re-use was preferable to recycling; they asked how much we would be recycling and also how we were going to ensure that waste was dealt with appropriately onshore. As described in Section 4.9 we plan to recycle at least 97% by weight of the material returned to shore in the topside; some individual items and components may be re-used. As described in Section 4.8, the ASP facility has a wide range of facilities for handling and storing segregated waste streams (that is before they are sent for recycling). It also has facilities, equipment, procedures and personnel for identifying, removing, handling, storing and disposing of a range of hazardous wastes. The ASP facility will have all the necessary licenses and permits for handling and dismantling a structure such as a topside, and for handling, storing and treating the range of waste materials likely to arise from the topside.

6.7 Synergy between offshore and onshore work

Issue	Response
Stakeholders expressed the wish that we would do some 'joined up thinking' between our offshore and onshore operations.	The selection of the SLV for single piece removal has been undertaken in conjunction with the appraisal of suitable facilities onshore for receiving and dismantling a topside. This resulted in the selection of Able for onshore dismantling and waste management. It has also lead to our deep and continuing involvement with Able in their programme of work to develop the ASP facility in general, and to strengthen the dismantling quay and receiving area in particular, to be able to accept the very large topside structures that they will receive during the course of the Brent decommissioning programme of work. The use of the SLV to remove the topside in one piece will help to reduce the potential impacts and risks associated with the dismantling and handling of such a large structure. Offshore personnel with knowledge of the facilities will be involved with Able in planning the dismantling operation. Offshore staff have cleaned and vented the topside process system to minimise hazards to the onshore personnel who will dismantle the topside.

6.8 Specific questions and our responses

Question	Response
Regarding the search for sites for onshore disposal will the contract be awarded on the basis of one or several sites?	We performed a detailed and thorough tendering exercise, having reviewed information and knowledge on a wide range of potential sites in UK and Europe. Having selected single lift as the removal method, we decided that it would be most efficient and safer (for all the personnel involved) to place a contract with one site which had all the resources and capabilities to handle all our topsides, if required. This will allow us to develop a long-term working relationship with the dismantling contractor and for them to benefit from the training they will give their personnel, the experience they will gain as they dismantle our topsides in turn, and any improvement in facilities, equipment or infrastructure they may make at the site during the course of the contract.
Is there a market for topsides?	The Brent Delta topside is more than 35 years old and we have not received any expressions of interest from third parties wanting to use it in its entirety. Some sub-components or items of equipment could be re-used, but there are likely to be few such opportunities because of the age of much of the equipment.
How safe is it to take the topsides off?	All operations offshore and onshore carry some risk. We have selected single lift removal for the topsides because it requires much less work offshore than traditional 'modular dismantling' where the large amount of cutting and lifting offshore, and the prolonged nature of such operations, leads to greater exposure of personnel and higher chances of accidents. Taking the topside onshore as a single piece means that dismantling can be carried out in a more controlled and safer manner. Before the Brent Delta topside is lifted off the SLV will have been thoroughly tested and approved by all the necessary surveyors and warranty authorities.

	Test lifts will have been performed. In conjunction with our lifting contractor AllSeas and our disposal contractor Able we will have completed a very thorough series of risk assessments, Hazard Identification (HAZID) and Hazard Operability (HAZOP) assessments, and assessments of Major Accident Hazards (MAH) to satisfy all parties that the lift will be safe, and that lifting, transportation and loading onto the ASP facility can all be carried out safely. All these assessments will inform and support the formal Dismantlement Safety Case that will have to be approved by the Health and Safety Executive (HSE) before the Brent Delta topside lift can proceed.
Will Shell consider investing in some of the yards?	Yes, having selected Able to dismantle the topside, we are working with them to upgrade parts of the ASP facility and this includes a significant programme of investment to strengthen the quay to take the weight of our topsides. This work is being carried out now and is due for completion in 2016, and has resulted in the creation of approximately 100 new jobs.
[Is] there going to be competition with offshore wind-farm installations?	With respect to the use of the SLV, we do not think there will be any competition with the installation of wind-farms; this is not the core business of AllSeas, and we have to book schedules of activity with them well in advance. With respect to onshore dismantling and disposal, the ASP facility has been used as a storage site for wind farm components before they go offshore. The ASP facility is very large, however, and our programme of work for the topside is being planned well in advance so there should be no competition with, or implications from, any other activities that may take place on this site from time to time.
Are there any skills or capabilities that are not yet present in the market place to execute the project? What are the workforce needs / skills / timeframes needed for decommissioning? Might the skills challenge be in terms of volume rather than types of skills?	By removing the Brent Delta topside in a single lift, and performing the vast majority of dismantling work onshore, we potentially gain access to a larger workforce of appropriately skilled personnel than would be available if the work had to be performed by personnel with the training and experience required to perform similar activities offshore. Able's facilities, capabilities and experience are summarised in Section 4.8. As a result of our reviews and tendering process we are confident that Able has the capabilities, skills and resources to dismantle the Brent Delta topside and manage the handling, transportation and disposal of all the different waste streams in a safe and environmentally responsible way. We are working closely with Able to ensure that everything will be completely ready to receive the Brent Delta topside, which is planned to be delivered to them in summer of 2016.

6.9 Comments received during formal Public Consultation

Table 6.1 presents a summary and analysis of the concerns and issues raised by statutory consultees, interested parties and organisations, and members of the public during the formal consultation period for the *Brent Delta Topside DP*. Table 6.1 will be prepared when the statutory Public Consultation has been completed.

Table 6.1 Summary of Stakeholders' Comments	
Comment	Response
National Federation of Fishermens' Organisations	
Scottish Fishermen's Federation	
Northern Ireland Fishermen Producers Organisation	
Global Marine Systems Limited	
Public	

7 MANAGEMENT OF THE PROGRAMME

7.1 Project management and verification

The project will be managed in accordance with applicable regulatory requirements and to Shell's Global Project Management standards. The project will be led by an experienced Shell Project Director with sub-project managers, project engineers and support functions including but not limited to HSE, Quality, and Project Services. The project will be broken down into a series of sub-projects and tendered to the open market as appropriate. Synergies will be sought with other Shell project activities (and in principle other decommissioning activities) where they make economic and business sense.

The approved *Brent Delta Topside DP* will be subject to strict change management, with any significant change to scope being agreed with DECC prior to implementation.

7.2 Post-topside removal debris clearance and verification

The planned programme to remove the Brent Delta topside by SLV will not result in the deposition of any debris on the seabed at Brent Delta. If an unforeseen incident results in the deposition of a significant item on the seabed, we will consult with DECC about an appropriate course of action to ensure that it does not give rise to any safety risk, commercial impact to other users of the sea or environmental impact.

After removal of the topside, mariners will be notified of the revised status of the Brent Delta structure. It will be entered into the FishSAFE programme of electronic warning, and the UKHO and MCA will be notified. The Aids to Navigation that will be fitted will have been approved by the UKHO and the UK Coastguard. The existing 500m radius safety zone around the platform will remain in place. The final condition of the Brent Delta GBS will depend on the outcome of the specific CA we are currently performing for this GBS, and will be described in full in the *Brent Field DP*.

For the Brent Delta topside, verification activities will concentrate on the management of onshore work and the disposal of waste streams through the ASP facility. Although our dismantling and disposal contract is with Able, we will have a continuing involvement with the planning, management and execution of the dismantling programme. After completion of the load-in at the ASP facility ownership of the structure will transfer to Able but we will continue to monitor Able's activities against the requirements of the dismantling contract to ensure successful completion of the dismantling and disposal phase of the work. This will include reviewing and approving necessary documents, monitoring execution activities and participating in significant joint meetings.

7.3 Schedule

The Brent Delta topside will be removed in the summer of 2016 and placed on Quay 6 at the ASP facility so that final preparations and inspection for dismantling can be completed. This preparatory planning work may take several months but it is anticipated that once dismantling begins it will take approximately 12 months to completely dismantle and dispose of the Brent Delta topside. Figure 7.1 shows the proposed schedule.

Figure 7.1 Summary of proposed schedule for decommissioning the Brent Delta topside.

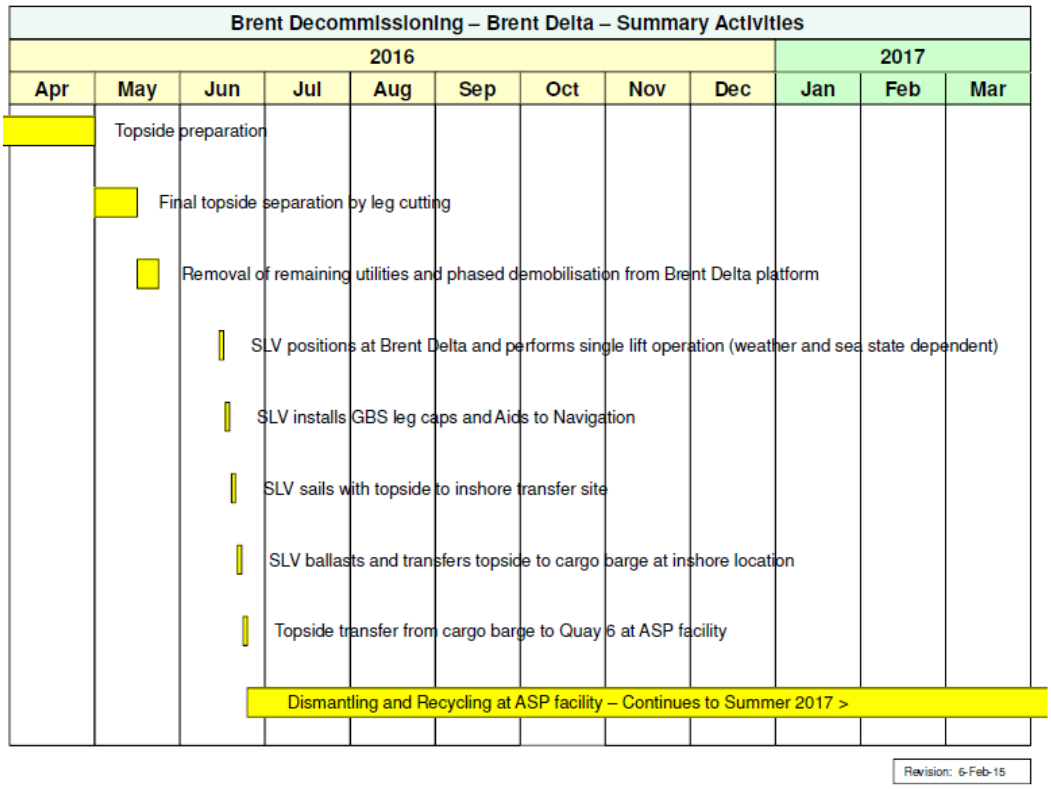

7.4 Costs

An estimate of the overall cost of the programme of work to remove and recycle the Brent Delta topside will be provided to DECC.

7.5 Close-out report

In accordance with the DECC Guidance Notes [2] we will submit a close-out report to DECC within four months of the completion of the whole programme of work to remove, dismantle and recycle the Brent Delta topside. This will describe the programme of work that was actually performed and in particular explain the reasons for any variations from the planned programme. As noted in Section 7.2, we do not plan to remove debris or carry out post-decommissioning structural or environmental surveys around Brent Delta until the whole Brent Field has been decommissioned.

7.6 Post-decommissioning monitoring and evaluation

After removal of the Brent Delta topside and installation of the Aids to Navigation we will initiate a programme of monitoring and maintenance, to be discussed and agreed with DECC, to ensure that the Aids to Navigation on Brent Delta are working properly. Until the remaining Brent facilities are decommissioned, it is most likely that this will be achieved by visual monitoring from the other Brent platforms, the Brent Field standby vessel and other vessels operating in the Field. The Aids to Navigation will be replaced at regular intervals.

On completion of the whole Brent Field decommissioning programme of work – when all the platforms and pipelines have been decommissioned - we plan to perform an 'as-left' structural survey to assess the location, condition and status of all items that are permitted under due derogation to be left in the Brent Field. We will also perform a post-decommissioning environmental survey around the platforms and along the routes of the pipelines. The scope of these surveys will be discussed and agreed with DECC and summarised in the *Brent Field DP*. The scope and frequency of any subsequent post-monitoring surveys will also be discussed and agreed with DECC and outlined in the *Brent Field DP*.

8 SUPPORTING DOCUMENTS

Table 8.1 lists the supporting documents referenced in this DP.

Table 8.1 Supporting Documents

Document Number	*Title*
1	*The Petroleum Act, 1998*
2	*Guidance Notes: Decommissioning of Offshore Oil and Gas Installations and Pipelines under the Petroleum Act 1998. Version V6, Department of Energy and Climate Change, March 2011.*
3	*OSPAR convention for the protection of the marine environment of the North-East Atlantic: Ministerial meeting of the OSPAR commission - SINTRA: 22 – 23 July 1998.*
4	*Oil and Gas UK Guidelines for the Suspension and Abandonment of Wells, Version 4, July 2012.*
5	*Guidelines and Standards for the Removal of Offshore Installations and Structures on the Continental Shelf and in the Exclusive Economic Zone, IMO, 19 October 1989.*
6	DNV, 2012. *Brent Field Decommissioning Environmental Impact Assessment Scoping Report.*
7	Ellis, J.R., Milligan, S., Readdy, L., South, A., Taylor, N. and Brown, M., (2010). *Mapping the spawning and nursery grounds of selected fish for spatial planning. Report to the Department of Environment, Food and Rural Affairs from Cefas. Defra Contract No. MB5301.*
8	Marine Scotland, 2013. *Fishing Effort and Quantity and Value of Landings by ICES Rectangle* http://www.scotland.gov.uk/Topics/Statistics/Browse/Agriculture-Fisheries/RectangleData [Accessed: November 2014].
9	BTO. http://www.bto.org/volunteer-surveys/webs/publications/webs-annual-report. [Accessed December 2014].
10	Environment Agency, 2014. http://www.maps.environment-agency.gov.uk/wiyby [Accessed: November 2014].
11	OGP, 2008. *Guidelines for the Management of Naturally Occurring Radioactive Material (NORM) in the Oil & Gas Industry*, Report No.: 412, September 2008.

9 PARTNER LETTER OF SUPPORT

A copy of the letter of support from Esso Exploration and Production UK Limited, the 50% equity holder in the Brent Field, is presented below. The original letter will be submitted with the final version of the *Brent Delta Topside DP*.

ExxonMobil International Limited
Union Plaza
1 Union Wynd
Aberdeen
AB10 1SL

Tel: 01224 264450
Fax: 01224 264490

ExxonMobil

Department of Energy & Climate Change
Offshore Decommissioning Unit
4th Floor
Atholl House
86-88 Guild Street
Aberdeen AB11 6AR

2nd February 2015

Dear Sir or Madam

PETROLEUM ACT 1998
BRENT DELTA TOPSIDE DECOMMISSIONING PROGRAMME

We acknowledge receipt of your letter dated 12th December 2014 regarding the abandonment programme for the Brent Delta platform topside (Ref 11.11.11.11/2U).

We, Esso Exploration and Production UK Limited, confirm that we authorise Shell U.K. Limited to submit on our behalf an abandonment programme relating to the Brent Delta platform topside as directed by the Secretary of State on 12th December 2014.

We confirm that we support the proposals detailed in the consultation draft of the Brent Delta Topside Decommissioning Programme, which is to be submitted in February 2015 by Shell U.K. Limited.

Yours faithfully

Gregor Nicol
Project Manager – UK Joint Interest

For and on behalf of Esso Exploration and Production UK Limited

Registered in England
Number 3834848
Registered Office:
ExxonMobil House, Ermyn Way
Leatherhead, Surrey KT22 8UX

An ExxonMobil Subsidiary

APPENDIX 1. COPIES OF PUBLIC NOTICES

Copies of the public notices placed in the press will be appended here.

APPENDIX 2. CORRESPONDENCE FROM STATUTORY CONSULTEES

Copies of correspondence with Statutory Consultees will be provided here after completion of the Public Consultation.

APPENDIX 3. TERMS AND ABBREVIATIONS

Abbreviation	Explanation
Able	Able UK Limited
ABS	Acrylonitrile butadiene styrene
ALARP	As Low As Reasonably Practicable
Annex 1	Habitats protected under the Habitats Directive 1992
Annex II	Species protected under the Habitats Directive 1992
ASP	Able Seaton Port
BD	Brent Delta
BDP	Brent Decommissioning Project
Benthic	Relating to the seabed.
Bq	Becquerel, the SI unit measuring the activity of a quantity of radioactive material
CA	Comparative Assessment
CCS	Carbon Capture and Storage
circalittoral	A sub-zone of the sublittoral, below the infralittoral zone, dominated by animals.
CoP	Cessation of Production
CO_2	Carbon dioxide
DECC	Department of Energy and Climate Change
Demersal	Relating to the lower part of the water column, close to the seabed.
DP	Decommissioning Programme
DWC	Diamond Wire Cutting
EMS	European Marine Site
EPDM	Ethylene propylene diene monomer (a type of rubber)
ESHIA	Environmental, Societal, Health Impact Assessment
Fauna	The collective name for animals.
FEED	Front End Engineering and Design
FishSAFE	An electronic means of alerting vessels to the proximity of a structure in the sea.
FFPD	Final Field Development Plan
GBS	Gravity Base Structure
GJ	Gigajoule
GRP	Glass-reinforced plastic
Habitats Directive	Council Directive 92/43/EEC on the Conservation of natural habitats and of wild flora and fauna.
HAZID	Hazard Identification
HAZOP	Hazard Operability
HFO	Heavy Fuel Oil
HP	High Pressure
HSE	[UK] Health and Safety Executive
HSSE & SP	Health, Safety, Security, Environmental and Social Performance
ICES	International Council for the Exploration of the Seas
IMO	International Maritime Organisation
infralittoral	The upper sub-zone of the sublittoral, dominated by seaweeds.
IRG	Independent Review Group
kg	Kilogramme

LAT	Lowest Astronomical Tide
Lip	Leave in Place
Lip-Cap	Leave in place with capping
Lip-MNA	Leave in place with monitored natural attenuation
LSA	Low Specific Activity (scale)
MAH	Major Accident Hazard
MBq	MegaBecquerel, one million (10^6) Becquerels
MCA	Maritime and Coastguard Agency
MCA Act	Marine and Coastal Access Act 2009
MCZ	Marine Conservation Zone
MSF	Module Support Frame
NNR	National Nature Reserve
NORM	Naturally Occurring Radioactive Material
OBM	Oil-based mud
OGP	Oil and Gas Producers (now International Association of Oil and Gas Producers)
OPEP	Oil Pollution Emergency Plan
OSPAR	Oslo Paris Commission
OSRL	Oil Spill Response Limited
Pb	Lead
Pelagic	Relating to the water column not adjacent to the seabed.
PL	Pipeline
PON	Petroleum Operations Notice
PVC	Polyvinylchloride
Ra	Radium
RAMSAR	Wetland sites of international I importance under the RAMSAR Convention 1975
RnR	Remove and Re-inject
ROV	Remotely Operated Vehicle
SLV	Single Lift Vessel
SOPEP	Shipboard Oil Pollution Emergency Plan
SPA	Special Protection Area
SSSI	Site of Special Scientific Interest
Sublittoral	The seabed from the lowest level of the tide to the edge of the continental shelf.
t	Tonne (1,000kg)
TERRC	Teesside Environmental Reclamation and Recycling Centre
TLS	Topside Lifting System
UKCS	United Kingdom Continental Shelf
UKHO	United Kingdom Hydrographic Office
VtO	Vessel to Onshore

This page is deliberately blank