JAP(D) 100C-20
November 2010
(Superseding AP 100C-20
3rd Edition dated June 1994 and
AP 100K-20 dated March 1996)

Ministry of Defence

MILITARY AVIATION ENGINEERING

PREPARATION AND AMENDMENT OF MAINTENANCE SCHEDULES

Sponsored for use within
UK Military Aviation
by

►MAA Reg Dep Hd◄

Publication Organization:
►Military Aviation Authority◄

AMENDMENT RECORD

Amdt No.	Date Incorporated
1	February 2011
2	August 2012
3	
4	
5	
6	
7	
8	
9	
10	
11	
12	
13	
14	
15	
16	
17	
18	
19	
20	
21	
22	
23	
24	
25	
26	

CONTENTS

PRELIMINARY MATERIAL

	Page
Front cover (title page)	(i)
Amendment record	(ii)
Contents (this list)	(iii)
Preface	(v)
Related and associated publications	(vi)
List of abbreviations	(vii)
Record of changes	(x)

PREPARATION AND AMENDMENT OF MAINTENANCE SCHEDULES

Chapter

1-0 General requirements
1-1 Production and revision of schedules
1-2 Upkeep of existing schedules
1-3 Layout and presentation
1-4 Terminology
1-4 Annex A - Glossary of terms
1-5 Supplementary rules

2-0 Standard preliminary pages

3-0 Aircraft Topic 5A1 master maintenance schedule - general
3-1 Aircraft Topic 5A1 preliminary pages
3-2 Aircraft Topic 5A1 section 1 - master maintenance list
3-3 Aircraft Topic 5A1 section 2 - component replacement list
3-4 Aircraft Topic 5A1 section 3 - component life register
3-5 Aircraft Topic 5A1 section 4 - scheduled and out-of-phase register
3-6 Aircraft Topic 5A1 section 5 - component fatigue factor tables

4-0 Air launched guided weapon Topic 5A1 master maintenance schedule - general
4-1 Air launched guided weapon Topic 5A1 MMS - preliminary pages
4-2 Air launched guided weapon Topic 5A1 MMS - master maintenance list

5-0 Topic 5A2 hazard and maintenance information

6-0 Aircraft Topic 5A3 maintenance procedures

7-0 Aircraft Topic 5A5 maintenance procedures subject to special approval

8-0 Aircraft Topic 5A6 weapon loading/off-loading procedures

9-0 Aircraft Topic 5A6 weapon loading/off-loading procedures subject to special approval

10-0 Aircraft flight servicing - general
10-1 Topic 5B1 flight servicing schedule
10-2 Topic 5B1A continuous charge maintenance
10-3 Topic 5B1C flight servicing schedule (role equipment)

11-0 Packaged maintenance schedules - general
11-1 Topic 5B2 primary maintenance schedule
11-2 Topic 5B2A flexible primary maintenance schedule
11-3 Topic 5C minor maintenance schedule
11-4 Topic 5C equalized maintenance schedule
11-5 Build-up style Topic 5C basic maintenance schedule
11-6 Flex-ops style Topic 5C basic maintenance schedule
11-7 Topic 5(CTY) contingency maintenance schedule
11-8 Topic 5D major (or depth) maintenance schedule

12-0 Topic 5F bay maintenance schedule - general
12-1 Topic 5F bay maintenance schedule - aircraft
12-2 Topic 5F bay maintenance schedule - component

13-0 Topic 5G non-destructive test schedule

14-0 Topic 5G1 vibration analysis schedule

15-0 Aircraft storage schedules - general
15-1 Topic 5L storage maintenance schedule
15-2 Topic 5N preparation for storage schedule
15-3 Topic 5P maintenance during storage schedule
15-4 Topic 5Q recovery from storage schedule

16-0 Topic 5M flight test schedule

17-0 Topic 5T operational turn round schedule

18-0 Operational readiness servicing schedules - general
18-1 Topic 5U1 operational readiness servicing schedule - conventional weapon role
18-2 Topic 5U2 operational readiness servicing schedule - special weapon role
18-3 Topic 5U3 operational readiness servicing schedule - non-armed aircraft

19-0 Topic 5V significant items: identification, sampling and reporting - general
19-1 Topic 5V significant items: identification, sampling and reporting - preliminary pages
19-2 Topic 5V section 1 - structure - general information
19-3 Topic 5V section 2 - structure - scheduled examination and sampling requirements
19-4 Topic 5V section 3 - structure sampling - planned sampling programme
19-5 Topic 5V section 4 - structure sampling - opportunity sampling
19-6 Topic 5V section 5 - structure sampling - teardown sampling
19-7 Topic 5V section 6 - structure sampling - structure sampling procedures
19-8 Topic 5V sections 7 to 10 - scheduled examination and sampling of functionally significant items

20-0 Topic 5W summary of component repair plans

21-0 Layout and presentation of maintenance schedules in a Portable Document Format (PDF)

22-0 Maintenance schedules produced in an interactive electronic technical publication

PREFACE

1 This publication contains standard procedures and guidance for all personnel concerned with the preparation and amendment of maintenance schedules in the Topic 5 series of publications. The examples of Topics 5 pages are for illustrative purposes only and are not intended to be 'templates' or 'style sheets'. The exact format of each Topic 5 publication will be dependent on the house style of the Publication Organization (PO) responsible for producing or maintaining it. However, the principles described regarding the general construction and presentation of a Topic 5 publication are to be applied to all schedules relating to aircraft and self-propelled air-launched guided weapons. Any deviation from the general construction and presentation described herein is to be authorized by the designated Project Team Leader.

2 This publication is approved for use by the nominated sponsor detailed on the front cover of this publication as specified in ►MAP-01◄. The publication is available for use in CD-ROM form, through the ►Forms & Publications Logistics Commodities & Services (FPLCS) ◄, Bicester. The nominated PO identified on the front cover of this publication is responsible for the management and maintenance of this publication on behalf of the sponsor.

3 Recommendations for amendment to this publication are to be made on MoD Form 765 in accordance with the instructions provided in ►MAP-01 Chap 8◄.

4 New or amended material will be identified by ►red text◄ to show the amendment.

5 The terminology used throughout this publication is, where appropriate, in accordance with ►MAP-01◄ and additional terminology has been defined herein. Readers should be aware of possible differences in terminology when comparing this publication to other technical documents or air publications.

Related and associated publications

►MAP-01	Manual of Maintenance and Airworthiness Processes◄
►MAP-02	Manual of Maintenance and Airworthiness Processes – Supplement – MOD Form 700 Series of Forms◄
JAP(D) 100C-22	Guide to Developing and Sustaining Preventive Maintenance Programmes
AP 100Z-0001	Air Technical Publications Referencing System Coding Lists and Procedures
AP 100Z-0101	Catalogue of Coded Air Technical Publications Microfiches and Air Diagrams
ASD S1000D	International specification for technical publications utilising a common source database
ASD STE100	International specification for the preparation of maintenance documentation in a controlled language
ATA 100	International Air Transport Association Specification
BS 5261	Copy Preparation and Proof Correction
BS 5775	Specification for Quantities, Units and Symbols
DAvP 70	Specification for Air Technical Publications
DEF STAN 01-5	Fuels, Lubricants and Associated Products
JSP 110	Joint Service glossary
JSP 181	Specification for technical publications for the Services - Physical standards
JSP 182	Specification for technical publications for the Services - Presentation and layout
JSP 183	Specification for technical publications for the Services - Illustration standards
JSP 184	Specification for technical publications for the Services - Security requirements
JSP 543	Defence Technical Documentation - Policy and Requirements (JSPs 181, 182 and 184 to be incorporated - JSP 183 incorporated)
►MRP RA	MAA Regulatory Publication Regulatory Articles◄
-	The Concise Oxford Dictionary

List of abbreviations

A/F	After Flight
AIL	Advance Information Leaflet
AIS	Amendment Instruction Sheet
ALGW	Air Launched Guided Weapons
AMM	Aircraft Maintenance Manual
AP	Air Publication
B/F	Before Flight
CD ROM	Compact Disc Read-Only Memory
CFFT	Component Fatigue Factor Tables
CLR	Component Life Register
CM	Composite Materials
COMM	Continuous Operation Mandatory Maintenance
COSHH	Control of Substances Hazardous to Health
CRC	Camera-ready Copy
CRL	Component Replacement List
CRP	Component Repair Plan
CSDB	Common Source Database
CTY	Contingency Maintenance Schedule
DAP	Digitized Air Publication
DFS	Daily Flight Servicing
DMML	Draft Master Maintenance List
DS	Dehumidified Storage
DVD	Digital Versatile Disc
E/C	Essential Check
ED	Environmental Degradation
ESVRE	Establish-Sustain-Validate-Recover-Exploit
►FPLCS	Forms & Publications Logistics Commodities & Services (formerly Joint Support Chain Services (JSCS)) ◄
FTS	Flight Test Schedule
FSS	Flight Servicing Schedule
HLA	High Life Aircraft
H&MI	Hazard and Maintenance Information
H&S	Health and Safety
HS	Humidified Storage
HSIS	Hazardous Stores Information System
HSWA	Health and Safety at Work etc. Act 1974
IETM	Interactive Electronic Technical Manual
IETP	Interactive Electronic Technical Publication
IOS	Integrated Operational Support

IRAN	Inspect and Repair as Necessary
IRR	Immediate Readiness Reception
ISD	In-service Date
JSP	Joint Service Publication
LITS	Logistics Information and Technology System
LME	Locally Manufactured Equipment
LOC	List of Contents
LP	Loading Procedure (Used only in weapons schedules)
LSA	Logistic Support Analysis
LSAR	Logistic Support Analysis Record
LTR	Long Term Reserve
►MAA	Military Aviation Authority◄
MML	Master Maintenance List
MMS	Master Maintenance Schedule
MP	Maintenance Procedure
MPS	Maintenance Policy Statement
►MRP	MAA Regulatory Publications◄
MTR	Medium Term Reserve
MWO	Maintenance Work Order
OOP	Out-of-Phase
ORA	Operational Re-arm
ORS	Operational Readiness Servicing
ORSS	Operational Readiness Servicing Schedule
OTR	Operational Turn Round
PDF	Portable Document Format
PFN	Penalty Factoring Number
PO	Publication Organization
PT	Project Team
PTR	Post Taxi Recovery
►RA	Regulatory Article◄
RCM	Reliability Centred Maintenance
RECN	Reception
RECV	Recovery
RS	Replenishment Servicing
SAL	Service Amendment Leaflet
SIN	Schedule Identification Number
SME	Subject Matter Expert
SML	Storage Maintenance List
SMS	Storage Maintenance Schedule
SMT	Scheduled Maintenance Task

SNOW	Serial Number of Work
S of CRP	Summary of Component Repair Plans
SoFS	Safety of Flight Structure
SOOPMR	Scheduled and Out-of-Phase Maintenance Register
SSI	Structurally Significant Item
SSIN	Storage Schedule Identification Number
SSP	Structure Sampling Procedure
STR	Short Term Reserve
TFS	Technical Flight Servicing
TI	Technical Information
T/R	Turn Round
WFSMM	Waived Flight Servicing Mandatory Maintenance
WRAM	Work Recording and Asset Management

RECORD OF CHANGES

Amendment 1 Dated February 2011

Preliminary pages

1 A record of changes is introduced to describe the changes incorporated as a result of amendment action.

2 The Contents page is updated.

Chapter 12-1

3 A revised chapter is introduced.

Chapter 12-2

4 A revised chapter is introduced.

Chapter 19-0

5 A revised chapter is introduced.

Chapter 19-1

6 A revised chapter is introduced.

Chapter 19-2

7 A revised chapter is introduced.

Chapter 19-3

8 A revised chapter is introduced.

Chapter 19-4

9 A revised chapter is introduced.

Chapter 19-5

10 A revised chapter is introduced.

Chapter 19-6

11 A revised chapter is introduced.

Chapter 19-7

12 A revised chapter is introduced.

Chapter 19-8

13 A revised chapter is introduced.

Amendment 2 Dated August 2012

All pages

14 The publication has been updated to reflect the MAA Operating Model.

CHAPTER 1-0

GENERAL REQUIREMENTS

CONTENTS

Para

1 Introduction
2 Policy requirements
3 Purpose and scope of maintenance schedules
5 Responsibilities for management and production
6 Responsibilities for schedule maintenance
7 Configuration control
7 Duplication of maintenance information
8 Concessions to deviate from schedule standards
9 Technical content
10 Schedules approval
11 New schedules
14 Amendments to existing schedules
17 Schedules subject to special approval

Table Page

1 Aircraft publication topics 2
2 Topic 5 series publications – sub topics 3

Figure Page

1 Topic 5 publications relationships 4

INTRODUCTION

1 This publication provides guidance on the standards and procedures to be adopted for the preparation, production and amendment of Topic 5 series style aircraft and equipment maintenance schedules.

POLICY REQUIREMENTS

2 ►MAA Reg-Eng-DAw ◄ is responsible for the formulation and promulgation of RAF policy for the through-life management of technical information, including this publication, as stated in ►MAP-01 Chapter 8.1◄. The instructions contained within this publication are derived from and supersede the instructions promulgated in AP 100C-20 and AP 100K-20.

PURPOSE AND SCOPE OF MAINTENANCE SCHEDULES

3 The purpose of Topic 5 maintenance schedules is to provide tradesmen, supervisors and engineering management with the preventive maintenance requirements for the aircraft and items of equipment for which they hold a responsibility to maintain.

4 The Topic 5 series of publications is part of the aircraft publication topic system shown at Table 1 and comprises the sub-topics shown in Table 2. The relationship between the schedule sub-topics is shown at Figure 1.

TABLE 1 AIRCRAFT PUBLICATION TOPICS

Topic	Title
1	Aircraft maintenance manual
2	General orders and modifications
3	Parts catalogues and related information
5	Maintenance schedules
6	Repair and reconditioning instructions
7	Preservation, packaging, transportation and storage manual
9	Weight and balance data
10	Wiring diagram manual, or maintenance diagrams manual
11	Air transport operations manual
12	Ground handling and cross servicing
13	Modification lists
14	Flight reference cards
15	Aircrew manual
16	Operating data manual

RESPONSIBILITIES FOR MANAGEMENT AND PRODUCTION

5 The overall responsibility for the management, content and production of the Topic 5 maintenance schedules covered in this publication lies with the individual Technical Information (TI) sponsor throughout the life of the aircraft or equipment.

RESPONSIBILITIES FOR SCHEDULE MAINTENANCE

6 The nominated PO is responsible for the preparation, issue, revision and amendment of the maintenance schedules under the direction and authorization of the TI sponsor.

CONFIGURATION CONTROL

Duplication of maintenance information

7 Wherever possible duplication of maintenance information is to be avoided.

7.1 Where duplication already exists between the Topic 1 Aircraft Maintenance Manual (AMM) and Topics 5A3, 5F etc, the TI Sponsor is to make sure that AMM amendments are reflected in these topics as required.

7.2 Where other duplications of information are necessary (eg, Topic 5A3/5B1 annexes) then the original and duplicate procedures are to be cross-referenced to make sure that the amendment is concurrent.

7.3 Equipment fitted to more than one aircraft type may have separate publications containing maintenance information. Where an aircraft TI sponsor can justify the duplication of such information within a Topic 5 and the equipment TI sponsor agrees, the equipment TI sponsor is responsible for amendments to the Topic 5 information.

Concessions to deviate from schedule standards

8 A TI sponsor wishing to deviate from the standards of presentation or schedules formats detailed within this publication are to seek a formal written concession for any such deviation from the sponsor of this publication. If a deviation is agreed and a concession granted, the sponsor of this publication will authorize the TI sponsor to proceed with the production of the schedule in accordance with the concession. The written concession is to be retained on file to provide an audit trail.

TABLE 2 TOPIC 5 SERIES PUBLICATIONS - SUB-TOPICS

Topic	Title
5A1	Master maintenance schedule
5A2	Hazard and maintenance information
5A3	Standard maintenance procedures
5A4	Suggested maintenance plans
5A5	Maintenance procedures subject to special approval
5A6	Weapon loading/off-loading procedures
5A7	Weapon loading/off-loading procedures subject to special approval
5B1	Flight servicing schedule
5B1A	Continuous charge maintenance
5B1C	Flight servicing (role equipment) schedule
5B2	Primary maintenance schedule
5B2A	Flexible primary maintenance schedule
5B2 & C	Primary and minor/basic maintenance schedule
5C	Minor, equalized or basic maintenance schedule
5 (CTY)	Contingency maintenance schedule
5D	Major maintenance schedule
5E	Change of Role procedures
5F	Bay maintenance schedule
5G	Non-destructive test schedule
5G1	Vibration analysis techniques
5G2	Electromagnetic compatibility test procedures
5J	Special to type support equipment
5K	Schedule of component lives
5L	Storage maintenance list
5M	Flight test schedule
5N	Preparation for storage schedule
5P	Maintenance during storage schedule
5Q	Recovery from storage schedule
5R	Dismantling and re-erection schedule
5S	Cross servicing schedule
5T	Operational turn round schedule
5U1	Operational readiness servicing schedule
5U2	Operational readiness servicing schedule subject to special approval
5U3	Operational readiness servicing schedule (when applied to unarmed aircraft)
5V	Structural sampling requirements and procedures
5W	Summary of component repair plans
5X	Weapon preparation and de-preparation procedures
5Y	Aircrew landaway flight servicing schedule
5Z	Anti-deterioration maintenance schedule

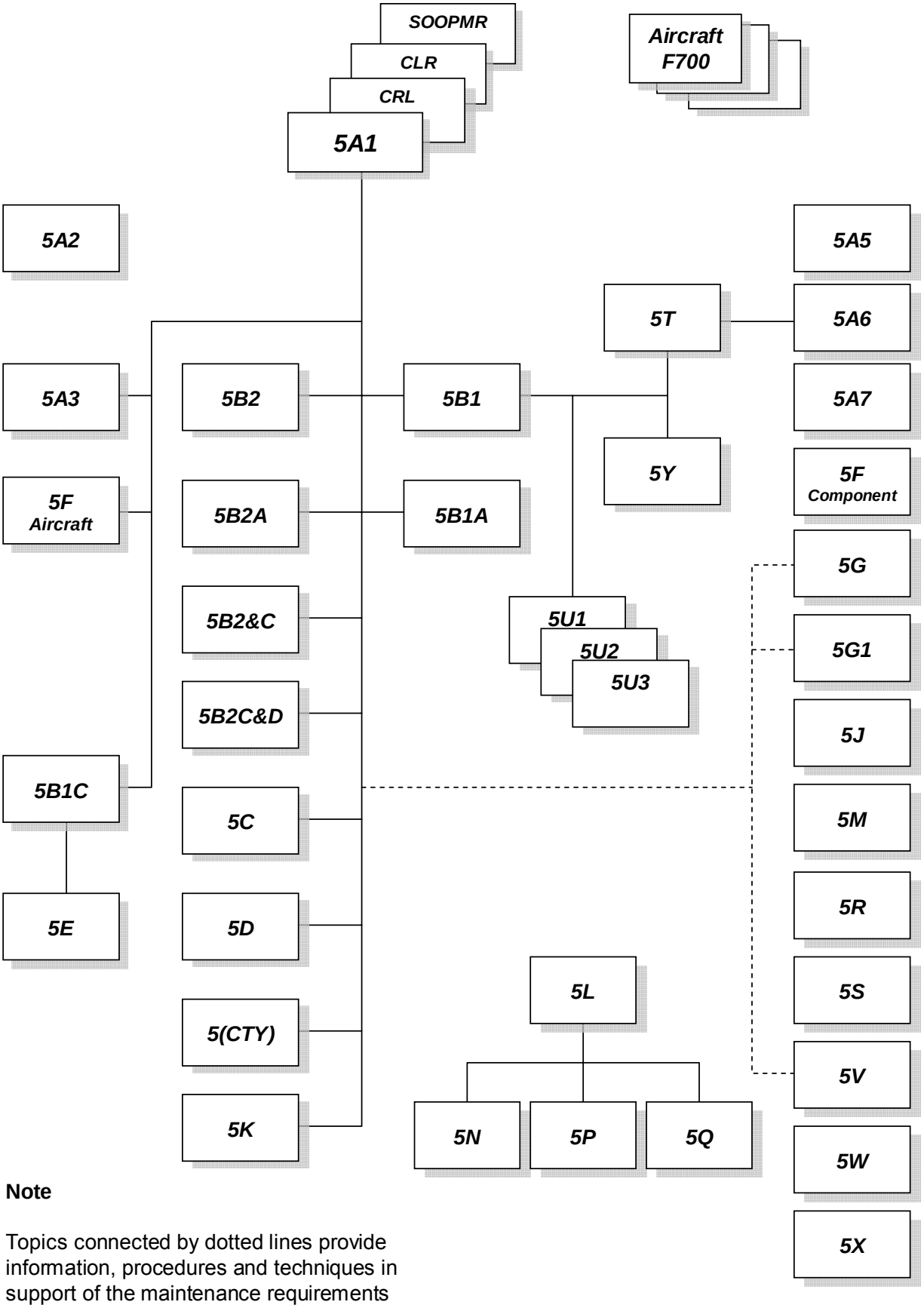

Note

Topics connected by dotted lines provide information, procedures and techniques in support of the maintenance requirements identified in the Topic 5A1.

Figure 1 Topic 5 publications relationships

TECHNICAL CONTENT

9 It is essential that the instructions contained in maintenance schedules should not present a hazard to flight safety. During the preparation and amendment of maintenance schedules every effort should be made to make sure that the technical content of the schedules is correct and verified by the following methods as necessary:

9.1 Examination of the equipment.

9.2 Consultation with tradesmen working on the equipment.

9.3 Reference to appropriate maintenance manuals, orders and standard specifications.

9.4 Consultation with the TI sponsor/platform PT/Aircraft Engineering Development and Investigation Team.

9.5 Assistance, advice and guidance from a Subject Matter Expert (SME) or specialist organizations as appropriate.

9.6 Assistance, advice and guidance from manufacturers or contracted support organisations.

SCHEDULES APPROVAL

10 In order for the TI sponsor to discharge the responsibilities for schedule management outlined in Para 5, the content of each new schedule or amendment is to be formally agreed before being produced and distributed. The procedures to be adopted are detailed in the following paragraphs.

New schedules

11 New preventive maintenance schedules are derived from Reliability Centred Maintenance (RCM) analysis that provides the methodology to develop the preventive maintenance programme for the aircraft or equipment.

12 The RCM analysis documents are scrutinised by the TI sponsor at a series of formal approval meetings for agreement or amendment as appropriate. The approved technical content is then authorized for use by the TI sponsor.

13 Following final approval by the TI sponsor, the new schedules can be prepared and produced.

Amendments to existing schedules

14 All proposals to amend existing preventive maintenance schedules are to be subject to RCM analysis except where the submission is for minor typographical errors or non-RCM derived content.

15 The TI sponsor is to signify approval of the amendment proposal by signing the RCM analysis document (as required) and the appropriate block on the MOD Form 765 in accordance with the requirements of ►MAP-01 Chapter 8◄.

16 On completion of the approval process, the amendment can be prepared and produced.

Schedules subject to special approval

17 For schedules subject to special approval refer to JSP 372.

CHAPTER 1-1

PRODUCTION AND REVISION OF MAINTENANCE SCHEDULES

CONTENTS

Para

1 Introduction
2 Production of maintenance schedules
2 General
3 Maintenance schedule steering committee
4 Creation of the Draft Master Maintenance List (DMML)
5 Approval of the DMML
6 Production of maintenance schedules
7 Revision of maintenance schedules
8 Maintenance schedule revision steering meeting
9 Production of revised maintenance schedules
10 Publication coding
11 Print figures
12 Requests for printing
13 Issue and distribution procedures

INTRODUCTION

1 This chapter deals with the procedures for the creation, production and revision of maintenance schedules formulated and promulgated through the UK Military Aviation support organizations.

PRODUCTION OF MAINTENANCE SCHEDULES

General

2 The nominated PO will prepare and produce maintenance schedules on behalf of the TI sponsor. Sponsors of maintenance publications for new aircraft are to make sure that the PO tasking allows sufficient time to produce and complete the schedules prior to introduction of the first aircraft into service.

Maintenance schedule steering committee

3 Following tasking, a schedule steering meeting is to be convened by the nominated PO who will normally provide the chairman; however, the TI sponsor may wish to make his own choice of chairman with the PO providing administrative support. The steering committee is to establish the production programme for the schedules by the following:

3.1 Allocating responsibilities and timescales for all aspects of schedules production.

3.2 Identifying the sub-topics that will be required.

3.3 Identifying which format the topics will be presented in.

3.4 Allocating responsibilities and timescales for all aspects of production of the necessary sub-topics.

3.5 Identifying any necessary schedule proving activities and allocating the responsibilities for doing them. The project team supported by the PO will normally do the schedule proving.

Creation of the Draft Master Maintenance List (DMML)

4 The DMML is a document containing all the preventive maintenance requirements and provides the foundation of the maintenance schedules to be produced. All preventive maintenance requirements included in the DMML are to be derived using Reliability Centred Maintenance (RCM) analysis techniques as detailed in JAP(D) 100C-22 Guide to Developing and Sustaining Preventive Maintenance Programmes.

Approval of the DMML

5 The maintenance recommendations detailed on RCM analysis worksheets are presented to the platform PT for agreement at a formal DMML approval meeting convened in the same manner as the steering committee meeting outlined in Para 3. The platform PT authorizes the content of the DMML via signed approval of RCM worksheets. Any changes made by the platform PT to the recommended operations and/or frequencies are to be annotated, signed and dated in red ink on the RCM worksheet. Copies of the RCM worksheets are retained as a formal record of the creation of the DMML.

Production of maintenance schedules

6 The DMML forms the basis of production for the suite of maintenance schedules following approval by the TI sponsor. The steering committee will have decided on the sub-topic requirements and timescales for schedule production in compliance with the guidance contained in this publication. All maintenance schedules are to be produced as coded air publications.

REVISION OF MAINTENANCE SCHEDULES

7 The TI sponsor will task the nominated PO to review the engineering content of maintenance schedules following a period of in-service experience or as part of a continuous improvement review programme. The policy covering the revision of schedules can be found in ►MAP-01 Chapter 8◄.

Maintenance schedule revision steering meeting

8 A maintenance schedule revision steering meeting is convened to establish a schedule revision programme. The meeting will be convened by the platform and the following aspects of schedule revision should be considered:

8.1 The reason for the revision.

8.2 The reasons supporting proposed changes to the maintenance cycle.

8.3 The modification state to be reflected in the revised schedule.

8.4 The Servicing Instructions (SI) which are to be incorporated.

8.5 The nomination of a Key Station and authorization for the schedule revision team to visit the Key Station whenever necessary during the revision task.

8.6 The allocation of responsibilities and timescales for the production and authorization of the DMML.

8.7 The identification of assistance required from any specialist teams.

8.8 The identification of the sub-topics required.

8.9 The allocation of responsibilities and timescales for the production and issue of the revised schedules.

Production of revised maintenance schedules

9 Production of the revised schedules follows a similar procedure as that described for new schedules. The main difference in procedure concerns schedule proving, which is done by the PO schedule revision team and not by the platform PT.

PUBLICATION CODING

10 The purpose of coding is to provide a logical, unified cataloguing system for all technical publications. Any topic created for an aircraft whether through new, initial issue, the amalgamation of existing topics, or the sub-division of an existing topic is to be formally coded and registered. Information and guidance on all aspects of coding are contained in AP 100Z-0001 (Air Technical Publications Referencing System Coding Lists and Procedures).

PRINT FIGURES

11 The TI sponsor is to assess the number of copies and amendments required for distribution and the method of distribution to be used. If the assessed number is too small, an expensive reprint (of hardcopy) may be required at an early stage in the life of the schedule; conversely, too large a number of copies will be wasteful to produce and store. The copy requirements of all possible users are to be established as early as possible in the schedule production process.

REQUESTS FOR PRINTING

12 The nominated PO is responsible for the development and use of print request procedures in co-operation with the associated printing agency or organisation.

ISSUE AND DISTRIBUTION PROCEDURES

13 The TI sponsor is to formally authorize the issue and use of all schedules before they are distributed to the users.

14 The recommended method of schedule distribution is via the ►Forms & Publications Logistics Commodities & Services (FPLCS), Bicester◄.

CHAPTER 1-2

UPKEEP OF EXISTING SCHEDULES

CONTENTS

Para

1 Introduction
2 Control of amendments
3 Amendment production standards
4 Routine amendments
5 Large scale or complex amendments
6 Reprinting of maintenance schedules
9 Amendments affecting multiple topics
10 Amendment presentation
10 Amendment instruction sheet
20 Amendment record
21 Amendments to the amendment record
24 Amendment indication
25 Positioning of amendment numbers
26 Additional leaves
28 Procedure for introducing an advance information leaflet signal amendment
30 Handwritten amendments
31 Declaring publications obsolete

Figure Page

1 Example AIS - topic 5A1 3
2 Example AIS – topics other than topic 5A1 4
3 Example entries of a topic 5A1 amendment record 6
4 Example entries of other topic 5 series amendment record 6
5 Example entry of a topic 5A1 new amendment record 7
6 Example entry of a other topic 5 series new amendment record 7
7 Example entry of a reprint amendment record 7
8 Positioning of amendment numbers 8
9 Additional page numbering 8
10 Additional card numbering 9

INTRODUCTION

1 This chapter explains the general procedures for the amendment of hardcopy schedules whilst making sure that the original standard of the schedules is maintained. Most aircraft Topic 5 publications are produced using a licensed font called 'Monospac821 BT' ® which had been proven the most easily read font in low-light and artificial lighting conditions. The closest, alternative font that may be used is 'Arial'; however, an amendment to a schedule should be written in the font of the original schedule, thus avoiding the mixing of fonts. Alternatively, the schedule can be completely re-written to the alternative font.

CONTROL OF AMENDMENTS

2 The registration, control and progression of amendment proposals from submission to completion are to be visible for audit throughout the promulgation process. The use of documented procedures, tracking systems or locally produced proformae is to be maintained by the nominated PO.

AMENDMENT PRODUCTION STANDARDS

3 The standards to be applied to the amendment of existing schedules is as follows:

3.1 If an existing schedule is written to the standard contained within this publication, then this standard is to be maintained.

3.2 If an existing schedule is written to one clearly defined standard that differs from the standard contained in this publication, then the amendment is to be written to the standard of that schedule. This is termed 'the standard of the book'.

3.3 If an existing schedule is written to an inconsistent or unclear standard, then the standard contained within this publication is to be applied to the schedule.

ROUTINE AMENDMENTS

4 Routine amendments can be instigated by either of the following methods:

4.1 The TI sponsor or schedule user can submit routine amendment proposals to a PO using MOD Form 765 in accordance with ►MAP-01 Chapter 8◄. This system of amendment will normally be applied to proposals that can be completed by the PO within 50 man-hours or 3 months. Amendment proposals that are assessed as exceeding these timescales are to be considered non-routine and are to be progressed in accordance with Paragraph 5.

4.2 MOD Form 765 amendment proposals can be initiated from within a PO. These usually relate to an amendment for the correction of minor errors discovered by the PO whilst doing other work.

LARGE SCALE OR COMPLEX AMENDMENTS

5 When large-scale or complex amendment proposals are submitted that cannot be completed by the PO within a nominal 50 man-hours or 3 calendar months, the TI sponsor is to be advised accordingly and is to submit a formal task to the PO in accordance with current business agreements and procedures.

REPRINTING OF MAINTENANCE SCHEDULES

6 Reprints of Topic 5 schedules are usually requested by the publication distribution organization or TI sponsors when stocks of core publications or associated amendments are running low or are exhausted.

7 Reprints of Topic 5 schedules or amendments are to be an exact copy of the original print when first issued for distribution. Changes or corrections are not to be made to the presentation or content of the reprinted copy even if errors are apparent in the original issue.

8 Reprints may be issued as consolidated hardcopy versions that incorporate all amendments; however the inclusion of any amendment must be detailed in the schedule's Amendment Record.

AMENDMENTS AFFECTING MULTIPLE TOPICS

9 Proposed amendments to one schedule may affect one or more topics for that same aircraft or equipment. The possibility of other topics being affected is to be considered for every proposal. Action is to be taken to make sure that other affected topics are amended to reflect the same information and are promulgated simultaneously. Refer to Chapter 1-0 Figure 1 for information regarding topic relationships.

AMENDMENT PRESENTATION

Amendment instruction sheet

10 The Amendment Instruction Sheet (AIS) is the first leaf of an amendment issue and contains all the instructions necessary to incorporate an amendment into the associated publication. An example AIS for a Topic 5A1 is shown at Figure 1 and an example AIS for other topics is shown at Figure 2. The AIS is to identify the Amendment Number and issue date, the publication code number and edition number (as applicable), the publication date, the main title and the sub title of the publication. The main title identifies the End Item, where the term 'End Item' refers to the aircraft or major item of equipment description. The sub title identifies the name of the specific Topic 5 publication concerned (eg, Master Maintenance Schedule, Primary Maintenance Schedule, etc). The content of each AIS is modified to suit the requirements of each specific amendment.

AUTHORITY:
MINISTRY OF DEFENCE
MARCH 2006

AMENDMENT INSTRUCTION SHEET

Amendment No.20
to
AP Code-5A1
2nd Edition November 2004

MAIN TITLE

NB1 LITS/WRAM User Units Eng Co-ord and Plans are to inform the Publication Sponsor of receipt of this amendment.

NB2 After incorporating this amendment details are to be entered on the Amendment Record.

NB3 Any existing hand written Advance Information Leaflet (AIL) signals not cancelled by this amendment are to be re-incorporated.

NB4 Any associated amendments are to be incorporated in the relevant topics in conjunction with this amendment.

NB5 All previous amendments are to be incorporated prior to the incorporation of this amendment.

Under 'Associated Topic Amendments' enter as follows:

5A2	5B1	5B1A	5B2	5B2A	5(CTY)	5U3	LITS
7	4	2	20	20	4	Nil	Yes

MASTER MAINTENANCE SCHEDULE

This amendment affects the COMPONENT LIFE REGISTER (CLR) and SCHEDULED AND OUT-OF-PHASE MAINTENANCE REGISTER (SOOPMR) of the MOD F700

HEADINGS	REMOVE EXISTING PAGE NO	INSERT ATTACHED PAGE NO
INCORPORATE THIS AMENDMENT ONLY WHEN AUTHORIZED BY THE PUBLICATION SPONSOR		
Preliminary pages	(v) and (vi) (1 leaf)	(v) and (vi)
SECTION 1	1, 2, 13 to 18 inclusive, 159 to 162 inclusive and 175 to 178 inclusive (8 leaves).	1, 2, 13 to 18 inclusive, 159 to 162 inclusive and 175 to 178 inclusive (8 leaves).
SECTION 3	LIST OF CHAPTERS (1 leaf)	LIST OF CHAPTERS (1 leaf)
Chapter 1	8/9 (1 leaf)	8/9 (1 leaf)
SECTION 5	LIST OF CHAPTERS (1 leaf)	LIST OF CHAPTERS (1 leaf)
Chapter 4	7/8 (1 leaf)	7/8 (1 leaf)
This amendment cancels Advance Information Leaflet (AIL) No, 01/07		

2009-2843(1)

Figure 1 Example AIS - Topic 5A1

AUTHORITY:
MINISTRY OF DEFENCE
MARCH 2006

AMENDMENT INSTRUCTION SHEET

Amendment No.20
to
AP XXXX-5XX
2nd Edition November 2004

MAIN TITLE

NB1 LITS/WRAM User Units Eng Co-ord and Plans are to inform the Publication Sponsor of receipt of this amendment.

NB2 After incorporating this amendment details are to be entered on the Amendment Record.

NB3 Any existing hand written Advance Information Leaflet (AIL) signals not cancelled by this amendment are to be re-incorporated.

NB4 Any associated amendments are to be incorporated in the relevant topics in conjunction with this amendment.

NB5 All previous amendments are to be incorporated prior to the incorporation of this amendment.

ASSOCIATED AMENDMENTS

5A1
Amdt 20

SUB TITLE

HEADINGS	REMOVE EXISTING PAGE NO	INSERT ATTACHED PAGE NO
INCORPORATE THIS AMENDMENT ONLY WHEN AUTHORIZED BY THE PUBLICATION SPONSOR		
Preliminary pages	(vii) and (viii) (1 leaf)	(vii) and (viii) (1 leaf)
SECTION 1	LIST OF CHAPTERS (1 leaf)	LIST OF CHAPTERS (1 leaf)
Chapter 1	Cards 79/80, 83/84, 85/86 (3 leaves).	Cards 79/80, 83/84, 85/86 (3 leaves).
SECTION 3	LIST OF CHAPTERS (1 leaf)	LIST OF CHAPTERS (1 leaf)
Chapter 1	Card 169/170 (1 leaf)	Card 169/170 (1 leaf)
Chapter 2	Card 185 (1 leaf)	Card 185 (1 leaf)
Chapter 3	Card 201 (1 leaf)	Card 201 (1 leaf)
SECTION 5	LIST OF CHAPTERS (1 leaf)	LIST OF CHAPTERS (1 leaf)
Chapter 4	7/8 (1 leaf)	7/8 (1 leaf)
This amendment cancels Advance Information Leaflet (AIL) No, 01/07		

2009-2843(1)

Figure 2 Example AIS – Topics other than topic 5A1

11 The Notes (NB1 to NB5) are included or deleted as necessary and renumbered to meet the following requirements:

11.1 NB1. This note is to contain any specific instructions from the TI sponsor and is mandatory for LITS/WRAM aircraft topics 5A1.

11.2 NB2. This note is required on every AIS.

11.3 NB3. This note is required on every AIS. Any handwritten AIL information already on the leaf in the schedule is to be transferred to the leaf being inserted on amendment.

11.4 This note is required if associated amendments are to be incorporated simultaneously in other topics.

11.5 NB5. This note is required on all AIS from amendment 2 onwards.

12 Following the list of notes, an AIS for a Topic 5A1 is to include the entry:

"Under 'Associated Topic Amendments' enter as follows:"

This is followed by a table that indicates the associated topic amendment states.

13 For topics other than Topic 5A1 (See Figure 2), the entry following the list of notes is to be:

"ASSOCIATED AMENDMENTS".

The associated amendment block is completed to show what other topic(s) are affected for simultaneous amendment.

14 The topic title of the publication follows the associated amendment block.

15 When an amendment affects the Section 3 and/or Section 4 of the Topic 5A1, a note is added below the topic title as follows:

"This amendment affects the COMPONENT LIFE REGISTER (CLR) and/or the SCHEDULED AND OUT-OF-PHASE MAINTENANCE REGISTER (SOOPMR) of the MOD F700".

16 The column headings are titled as shown in the examples at Figures 1 and 2. The use of the word 'LEAF' is to be used as a generic term to identify 'page', 'card', or 'sheet'.

17 The following instruction is to be included for all LITS/WRAM applicable platforms and is to precede the amendment details:

"INCORPORATE THIS AMENDMENT ONLY WHEN AUTHORIZED BY THE PUBLICATION SPONSOR".

18 The amendment details are to be presented using the conventions shown in Figures 1 and 2.

19 An amendment which cancels an AIL is called an 'AIL follow-up' amendment. The following note is to be added at the foot of the AIS as applicable:

"This Amendment cancels Advance Information Leaflet (AIL) No....." (AIL reference in full).

Amendment record

20 The amendment record provides a continuing record of the amendment state of each individual copy of a publication. The amendment record of a Topic 5A1 also includes the current and equivalent amendment states of its associated topics. Example entries of a Topic 5A1 amendment record and of the other Topic 5 series are shown in Figure 3 and Figure 4 respectively.

MASTER MAINTENANCE SCHEDULE
MAIN TITLE

AMENDMENT RECORD

AP Code-5A1

Amdt No.	Date of Issue	Associated Topic Amendments								Amendment Incorporated	
		5A2	5B1	5B1A	5B2&C	5B2A	5(CTY)	5D		Signature	Date
1	January 2007	2	1	1	1	Nil	Nil	1		J Bloggs	1 Feb 07
2	August 2007	2	2	1	1	1	1	1		J Bloggs	5 Sep 07
3	February 2008	2	2	1	2	1	1	2		J Bloggs	4 Apr 08
4	March 2009	3	3	1	3	2	2	3		J Bloggs	2 Jun 09
5											

Figure 3 Example entries of a topic 5A1 amendment record

SUB-TITLE
MAIN TITLE

AMENDMENT RECORD

AP Code-5XX

Amdt No.	Date of Issue	Incorporated by (Signature)	Date
1	January 2007	J Bloggs	1 Feb 07
2	August 2007	J Bloggs	5 Sep 07
3	February 2008	J Bloggs	4 Apr 08
4	March 2009	J Bloggs	2 Jun 09
5			

Figure 4 Example entries of other topic 5 series amendment record

Amendments to the amendment record

21 The entries depicted in Figure 5 are to be applied to the Topic 5A1 amendment record when a new record is to be issued, as follows:

21.1 The first line of the record is to read:

"Amendment 1 to XX incorporated. Associated topic amendment states are to be at least those shown below".

21.2 The second line of the record is to show the latest amendment state of all the listed topics prior to the amendment being currently incorporated.

21.3 The remaining lines are to be renumbered, beginning with the current amendment number.

MASTER MAINTENANCE SCHEDULE
MAIN TITLE

AMENDMENT RECORD

AP Code-5A1

Amdt No.	Date of Issue	Associated Topic Amendments								Amendment Incorporated	
		5A2	5B1	5B1A	5B2&C	5B2A	5(CTY)	5D		Signature	Date
		Amendments 1 to 23 incorporated. Associated topic amendment states are to be at least those shown below.									
		5	10	Nil	15	15	1	1			
24											
25											
26											

Figure 5 Example entry of topic 5A1 new amendment record

22 For other Topic 5 series, the entry ’Amendments 1 to XX incorporated’ is used to overwrite the first recorded line when a new record is issued, as depicted in Figure 6. The remaining lines are renumbered starting with amendment XX plus one.

SUB-TITLE
MAIN TITLE

AMENDMENT RECORD

AP Code-5XX

Amdt No.	Date of Issue	Incorporated by (Signature)	Date
	Amendments 1 to 17 incorporated.		
18			
19			
20			
21			

Figure 6 Example entry of other Topic 5 series new amendment record

23 When a reprint with amendments incorporated is required, the following entry, as depicted in Figure 7, is to be included on the new Amendment Record to replace existing entries:

"Amendment 1 to XX incorporated in reprint."

SUB-TITLE
MAIN TITLE

AMENDMENT RECORD

AP Code-5XX

Amdt No.	Date of Issue	Incorporated by (Signature)	Date
1	Amendments 1 to 3 incorporated in reprint.		
2			
3			
4			
5			

Figure 7 Example entry of a reprint amendment record

Amendment indication

24 New or amended material is to be indicated by a 1.5 point vertical line in the outer margin (for portrait) or left hand margin (for landscape) of the page, card or sheet.

Positioning of amendment numbers

25 The amendment number is to be positioned adjacent to the page, card or sheet number as shown in Figure 8.

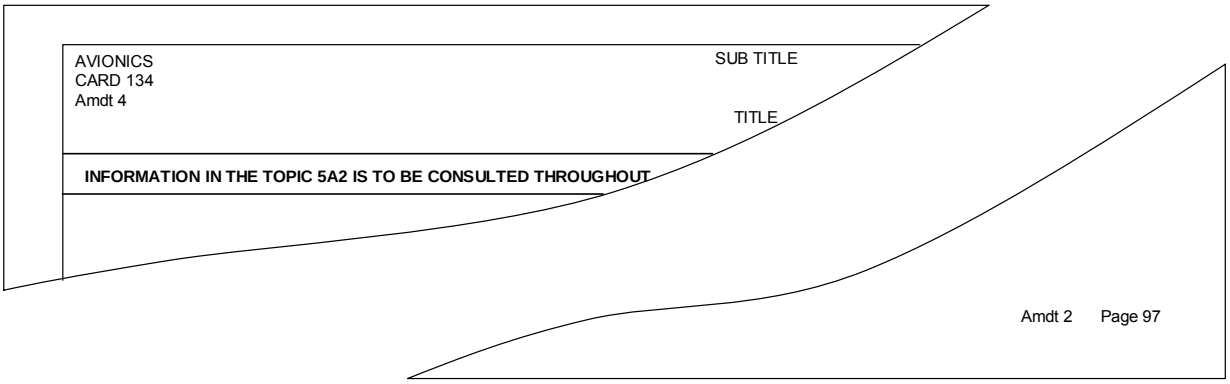

Figure 8 Positioning of amendment numbers

Additional leaves

26 When it is necessary to insert new leaves and still retain a page numbering sequence, the new pages are allocated the number of the preceding page with a suffix capital letter as shown in Figure 9.

27 When it is necessary to insert new leaves and still retain a card numbering sequence, the new cards are allocated the number of the preceding card with a suffix capital letter as shown in Figure 10.

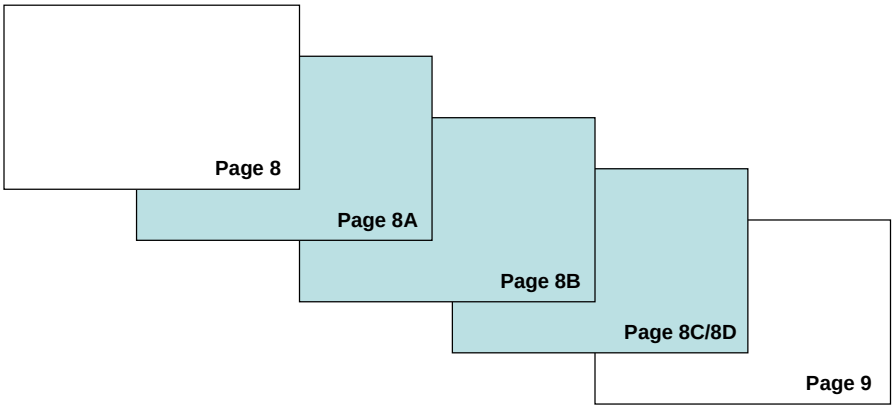

Figure 9 Additional page numbering

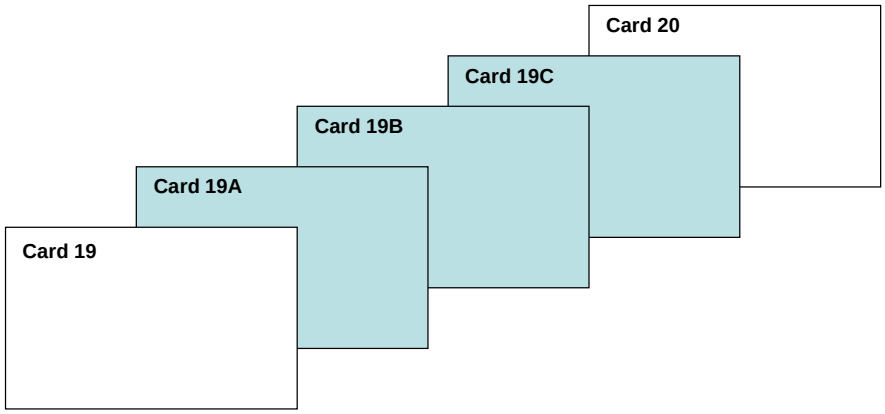

Figure 10 Additional card numbering

PROCEDURE FOR INTRODUCING AN ADVANCE INFORMATION LEAFLET AMENDMENT

28 The procedure for the issue of an Advance Information (AIL) amendment to a schedule is contained in ►MAP-01 Chapter 8◄. The procedure also specifies the time span within which the AIL follow-up amendment is to be published. However, the use of routine AILs to amend schedules should be avoided whenever possible and should not be adopted for amendments to the following:

28.1 Any Topic 5A2, Hazard and Maintenance Information.

28.2 Any form of Flight Servicing Schedule (Topics 5B1, 5B1A or 5B1C).

28.3 Any maintenance schedule work card that is produced in a MOD Form 707MS format.

29 The standard amendment procedure for maintenance schedules is sufficient for the incorporation of most required changes. However, amendments that concern safety or airworthiness may need to be issued as a matter of urgency. In such cases they may be released as AIL signals, as described in ►MAP-01 Chapter 8.2.2◄. The follow up action of an AIL signal amendment to a maintenance schedule should be a formal amendment as opposed to the release of a routine AIL. The issue of a Technical Instruction should be considered as an alternative if an amendment is urgent, but has no safety or airworthiness implications.

HANDWRITTEN AMENDMENTS

30 Handwritten entries are only permitted in maintenance schedules when they are detailed by an AIL signal or when they are to be re-incorporated as instructed by an AIS.

DECLARING PUBLICATIONS OBSOLETE

31 When a publication is deemed obsolete and is to be withdrawn from circulation, the TI sponsor is to inform the PO to produce a final amendment in accordance with the instructions detailed in AP100Z-0001.

CHAPTER 1-3

LAYOUT AND PRESENTATION

CONTENTS

Para

1 Introduction
2 Type face
2 Type style
3 Type size
4 Quotation marks
5 Page identification and numbering
5 Air Publication (AP) code reference
6 Edition number
7 Preliminary pages
8 Main body of text
9 Blank sides of leaves
10 Page formats
11 Topic 5M flight test schedule
12 Diagrams and tables
13 Positioning of diagrams and tables
14 Presentation
15 Positioning of explanatory notes and keys
16 Security classification
17 Format and presentation
18 Indication of security classification

Table Page

1 Topic 5 publications format 2
2 Diagrams 3
3 Tables 3

INTRODUCTION

1 The information contained within this chapter is for general application to all maintenance schedules. Specific requirements for schedules are shown in the relevant chapters of this publication.

TYPE FACE

Type style

2 Text is to be presented in a clear typeface. The preferred font is Monospac 821 BT. However, if Monospac 821 BT is not available Arial is to be used.

Type size

3 Management information is to be 8 point and technical information, 9 point.

Quotation marks

4 The preferred option is to use straight, rather than curly, quotation marks, used in the singular form.

PAGE IDENTIFICATION AND NUMBERING

Air Publication (AP) code reference

5 As a general rule the AP code reference will appear in the top right hand corner of each leaf in an AP. In the case of expendable work cards, eg MOD Form 707 MS, the code reference is to appear in the top right hand corner of the header block. Specific requirements for placing AP codes in other areas of leaves are detailed in the relevant chapters of this publication.

Edition number

6 The edition number is to appear beneath the AP code reference.

Preliminary pages

7 Preliminary pages are numbered consecutively in small Roman numerals in brackets eg (i), (ii).

Main body of text

8 Right-hand (portrait) and lower (landscape) pages are to bear odd numbers. Left hand (portrait) and upper (landscape) pages are to bear even numbers. Numbering is to be in Arabic numerals and consecutive throughout the text.

Blank sides of leaves

9 Where one side of a leaf is blank the page carrying text is to bear the number for both sides (eg (iii)/(iv), 57/58).

PAGE FORMATS

10 Maintenance schedules are produced in two sizes, A4 and A5. The general rule for deciding the size of a maintenance schedule is the location in which the schedule is intended for use. Flight line activities demand a compact format so A5 format schedules are used. Where size is not such a problem, eg in a bay or hangar, A4 schedules are used. The formats of Topic 5 publications are shown in Table 1.

TABLE 1 TOPIC 5 PUBLICATIONS FORMAT

Topic	Title	Format
5A1	Master maintenance schedule	A4 Landscape
5A2	Hazard and maintenance information	A5 Portrait
5A3	Maintenance procedures	A4 Landscape
5A5	Maintenance procedures subject to special approval	Not in use
5A6	Weapon loading/off-loading procedures	A5 Portrait
5A7	Weapon loading/off-loading procedures subject to special approval	A5 Portrait
5B1	Flight servicing schedule	A5 Portrait
5B1A	Continuous charge maintenance	A5 Portrait
5B1C	Flight servicing (role equipment) schedule	A4 Landscape
5B2	Primary maintenance schedule	A4 Landscape
5B2A	Flexible primary maintenance schedule	A4 Landscape
5C	Minor or equalized maintenance schedule	A4 Landscape
5C	Basic maintenance schedule (Army)	A4 Landscape or Portrait
5C	Basic maintenance schedule (RN Flex-ops)	A4 Portrait
5 (CTY)	Contingency maintenance schedule	A4 Landscape
5D	Major maintenance schedule	A4 Landscape

5E	Change of Role procedures	A4 Landscape
5F	Bay maintenance schedule	A4 Landscape
5G	Non-destructive test schedule	A4 Portrait
5G1	Vibration analysis techniques	A4 Portrait
5L	Storage maintenance list	A4 Landscape
5M	Flight test schedule	A4/A5 Various
5N	Preparation for storage schedule	A4 Landscape
5P	Maintenance during storage schedule	A4 Landscape
5Q	Recovery from storage schedule	A4 Landscape
5R	Dismantling and re-erection schedule	A4 Landscape
5T	Operational turn round schedule	A5 Portrait
5U1	Operational readiness servicing schedule	A5 Portrait
5U2	Operational readiness servicing schedule subject to special approval	A5 Portrait
5U3	Operational readiness servicing schedule (when applied to unarmed aircraft)	A5 Portrait
5V	Structural sampling requirements and procedures	A4 Landscape
5W	Summary of component repair plans	A4 Landscape or Portait

Topic 5M flight test schedule

11 Topic 5M Flight Test Schedules do not appear in one set format and are produced in both A4 and A5 sizes. For further information on the Topic 5M refer to Chapter 16-0.

DIAGRAMS AND TABLES

12 Diagrams and tables are used in maintenance schedules to improve understanding of the text. The standards for illustrations are contained in JSP 183.

Positioning of diagrams and tables

13 The positioning of illustrative material will depend upon the number of times it is referred to in the text and the size of the table or diagram. General rules are shown in Tables 2 and 3.

TABLE 2 DIAGRAMS

Diagram size	Less than half a page	More than half a page
Single reference within text	Diagram to be placed as close to reference as possible	Diagram to be placed at the end of the procedure
Multi-reference within text	Diagram to be placed at the end of the procedure	Diagram to be placed at the end of the procedure

TABLE 3 TABLES

Table size	Less than half a page	More than half a page
Single reference within text	Table to be placed as close to reference as possible	Table to be placed as close to reference as possible
Multi-reference within text	Tables to be placed as close to the references as possible	Table to be placed at the end of the procedure

Presentation

14 Diagrams and tables should be as simple as possible avoiding unnecessary shading or detail. The material should be readable without turning the page; however, if this is not possible then the material should be presented so that a clockwise rotation of the page will make it readable.

Positioning of explanatory notes and keys

15 Explanatory notes for tables are placed below the table. Keys to diagrams are placed adjacent to the material to which they refer.

SECURITY CLASSIFICATION

16 The security classification of information in a schedule is the joint responsibility of the sponsor and the author. The overall classification of a schedule should be that of the highest graded contents e.g. if one page in the schedule is graded as SECRET the overall classification of the schedule must be SECRET.

Format and presentation

17 Each page of a schedule classified restricted or higher is to be graded according to its content. The relevant grading is to be marked at the head and foot of every page on both front and rear faces.

Indication of security classification

18 A colour coding system is used for front and rear covers indicating the classification of material as follows:

TOP SECRET	Dark red
SECRET	Pink
CONFIDENTIAL	Green
Restricted	White
Unclassified	White

CHAPTER 1-4

TERMINOLOGY

CONTENTS

Para

1 Introduction
2 Glossary
3 Abbreviations and symbols
4 Unlisted abbreviations
5 Single trade and qualification abbreviations
6 Current trade and qualification abbreviations
7 Maintenance frequencies
8 Spelling and hyphens
10 Units of measurement
12 Initial capitals

INTRODUCTION

1 Maintenance schedules are issued to provide clear, concise instructions on how work is to be done. To safeguard against possible ambiguity and misinterpretation, schedules should be produced and amended using the following guidelines.

GLOSSARY

2 To promote a common understanding, a glossary of terms has been compiled and appears at Annex A. Operations in maintenance schedules should follow the glossary of terms; however, occasions will occur when there is a need to expand upon the terms used within the glossary.

ABBREVIATIONS AND SYMBOLS

3 Abbreviations are subject to the following rules:

3.1 JSP 101 is to be used for abbreviations describing units, formations etc.

3.2 BS 5775 lists the signs, symbols and physical quantities, symbols and abbreviations for SI and Imperial units.

3.3 When using generally accepted abbreviations to describe equipment the equipment title is written in full followed by the abbreviation in brackets the first time it appears in text. Thereafter the abbreviation should be used.

3.4 Where abbreviations are in upper case, full stops are not to be used between letters.

3.5 Generally, abbreviations should be lower case except for those units derived from proper names eg Amp (Ampere) and V (Volt).

3.6 Combined abbreviations are to appear with a space between the separate units eg N m for Newton metre.

3.7 Unit symbols and numerical values should be separated by a space eg 24 V.

3.8 The abbreviations for alternating and direct current may require more detail. The following examples show the method to be used:

28 VDC
240 VAC 50 Hz
-5 VDC

Unlisted abbreviations

4 Any abbreviations or symbols which are specific to an end item should be defined in the introduction to the schedules for that end item. However, general terms do not fall within this category and are therefore unlisted. Unlisted abbreviations include the following examples:

Alternating current	AC
As required	A/R
Audio frequency	AF
Centre of gravity	c of g
Circuit breaker	CB
Direct current	DC
Figure	Fig
High pressure	HP
Inch	in.
In charge	IC
Inside diameter	i.d.
Junction box	JB
Low pressure	LP
Number	No.
Outside diameter	o.d.
Quantity	Qty
Revolution(s)	rev
Revolutions per minute	rev/min
Socket	SKT
Switch	SW
Temperature	temp

Single trade and qualification abbreviations

5 The following single trade abbreviations should be used as a general standard:

Air Communications	AC
Air Communications/Air Radar	AC/AR
Airframe	AF
Air Radar	AR
Avionics	AV
Electrical	Elect
Flight Systems	FS
Painter/Finisher	Ptr/Fnr
Non-destructive Testing	NDT
Propulsion	Prop
Survival Equipment	SE
Weapons	Wpns
Zonal Survey	Zonal

Current trade and qualification abbreviations

6 The following abbreviations represent the current general standard:

Army mechanical trade group	Ac
RN all trades group	AE
Avionics trade group	Av
RN mechanical trade group	M
RAF Mechanical trade group	Mech
Non-destructive Testing	NDT
Painter/Finisher	Ptr/Fnr
Survival Equipment	SE
Weapons	Wpns
Zonal Survey	Zonal

Maintenance frequencies

7 Maintenance frequencies should be abbreviated as follows:

After Flight Servicing	A/F
Before Flight Servicing	B/F
Contingency Maintenance Schedule	Cty
Continuous Charge Mandatory Maintenance	CCMM
Daily Servicing	DS
Daily Flight Servicing	DFS
Essential Check Servicing	E/C
Major Maintenance	MJ
Minor Maintenance	M
Minor Star Maintenance	M*
Minor Two Star Maintenance	M**
Operational Readiness Servicing	ORS
Operational Turn Round Servicing	OTR
Post-taxi Recovery Servicing	PTR
Primary Maintenance	P
Primary Star Maintenance	P*
Primary Two Star Maintenance	P**
Replenishment Servicing	RS
Technical Flight Servicing	TFS
Turn Round Servicing	T/R
Waived Flight Servicing Mandatory Maintenance	WFSMM

SPELLING AND HYPHENS

8 Words should be spelt as shown in the Concise Oxford Dictionary. Where alternative spellings are shown the first version listed is the one which is to be used.

9 Hyphens should be used to aid understanding. The primary function of the hyphen is to indicate that two or more words should be read together as a single word with its own meaning.

UNITS OF MEASUREMENT

10 Where units are shown in maintenance schedules they should be the same as those used by the equipment that the schedule is supporting. Normally measurements are to appear in either SI or imperial units and not both together. Conversion between the two types of unit is required only where ground equipment or gauging tools are used to establish accurate measurement. Converted units are to appear in brackets following the units used by the equipment.

11 The following rules should be applied to the presentation of numerical values:

11.1 The decimal marker is to be a point placed on the base of the line; eg, 12.345.

11.2 A zero is always to precede the decimal marker if the number is less than unity; eg, 0.987.

11.3 A blank space is to be used to indicate thousands in numbers consisting of 5 digits or more, but no space if only 4 digits; eg, 12 345 or 9000.

11.4 Fractions should be presented thus:

Half - 1/2, one sixteenth - 1/16.

INITIAL CAPITALS

12 Capital letters should be used in maintenance schedules for the initial letters of the following:

12.1 Proper nouns or adjectives derived from them.

12.2 Publication references e.g. Section 1 Chapter 2, Sub-item 3.

12.3 Unit and section titles e.g. Headquarters Air Command, Station Medical Centre.

12.4 References to persons holding specific posts; eg, OC Eng and Supply Wing, NCO IC Aircraft Maintenance. Initial capitals are not to be used for general titles; eg, a qualified engineering officer.

CHAPTER 1-4 ANNEX A

GLOSSARY OF TERMS

CONTENTS

Para

1 Maintenance schedules glossary

MAINTENANCE SCHEDULES GLOSSARY

1 It should be noted that new and some recently revised maintenance schedules have adopted a glossary that is based on Simplified Technical English (STE) terms in accordance with Specification ASD-STE100. This glossary has therefore been compiled to reflect Specification ASD-STE100, whilst retaining the terms traditionally used in legacy maintenance publications. However, the revised terminology of this glossary should be incorporated into legacy maintenance schedules at the earliest suitable opportunity. Meanwhile, the traditional terms will remain in use, as required.

2 For aircraft with civil derivative variants, maintenance schedules may be developed using the RCM standard of Air Transport Association Maintenance Steering Group-3 (ATA MSG-3). In such cases the glossary of terms used within those schedules may include elements of the glossary defined within ATA MSG-3.

3 Where the following words or phrases appear in maintenance schedules, they are defined as follows:

Associated operation[1]

An operation that may be done at the same time as the forecasted maintenance operation, if it is convenient to do so.

Check[2]

See 'Do the *(specify)* check'.

Connect again[3]

Attach an item again that was previously disconnected. This task is to be done in accordance with authorized procedures and trade practices.

Disconnect

Detach the item from another. This task is to be done in accordance with authorized procedures and trade practices.

Do a zonal survey[4]

Do a general visual examination of a specified zone to detect damage, deterioration and discrepancies and assess the general condition of the zone. The zone is to be cleaned making sure that all dirt, oils and other foreign materials are removed. Examine the zone prior to and following any cleaning. The task is to be done using lighting and/or with the aid of a mirror, as necessary, and sufficiently close to the zone as to permit all features of the zone to be seen clearly. Care is to be taken not to cause damage through disturbance of installed items.

Do an inspection of the work[5]

Measure, do a test of, or otherwise compare the item with the applicable requirements. This is a quality control activity that is normally done by a supervisor. The supervisor is to determine that any work has been

---

[1] This term is applicable to Flex-op maintenance schedules.

[2] This term must only be used as a noun in conjunction with the action word 'Do' if the schedules are written to Specification ASD-STE100; eg, 'Do the *(specify)* check (MP XX-XX-X)'.

[3] This term was introduced to comply with ASD-STE100 terminology.

[4] This term was introduced to comply with ASD-STE100 terminology.

[5] This term was introduced to comply with ASD-STE100 terminology.

done properly in accordance with the relevant authorized procedures and that the assessed condition of the item is correct.

Do the *(specify)* check[1]

Compare the item with the specified standard. If the standard of the item is less than specified, the supervisor is to be informed. Remedial action is not to be done unless directed.

Do the *(specify)* test[2]

Using any necessary test equipment, do the procedure whereby an object or system is operated, or its function measured, to verify that its performance is to the specified standard. If the item or system is found to be unserviceable the supervisor is to be informed. Remedial action is not to be done unless directed.

Ensure[3]

See 'Make sure that ...'

Examine

Do a comprehensive scrutiny, supplemented by a physical security check, as necessary, to determine the condition of the item. The item is to be cleaned as necessary prior to examination. The physical security check is a manual activity and is to be done without the use of test equipment. The task is to be done using lighting and/or with the aid of a mirror, as necessary. Any faults identified are to be reported to the supervisor. Remedial action is not to be done unless directed.

Examine as far as possible

Within the physical constraints of the location of the item, do a comprehensive scrutiny, supplemented by a physical security check, as necessary, to determine the condition of the item without removing or disconnecting equipment. This term acknowledges that a detailed examination is not possible due to limited access. The item is to be cleaned as necessary prior to examination. The physical security check is a manual activity and is to be done without the use of test equipment. The task is to be done using lighting and/or with the aid of a mirror, as necessary. Any faults identified are to be reported to the supervisor. Remedial action is not to be done unless directed.

Fill[4]

To put the correct material into a tank, bottle or other container to a predetermined level, pressure or quantity. Where appropriate, locking devices and caps or covers are to be removed. Orifices and drains are to be cleared of obstructions, the correct material is then added to the container as directed. Finally, having made sure that gaskets and caps or covers are free from damage, caps or covers and locking devices are to be installed again.

Fit[5]

See 'Install'.

Inspect[6]

See 'Do an inspection of the work'.

Install[7]

Correctly attach the item to another. This task is to be done in accordance with authorized procedures and trade practices.

---

[1] This term was introduced to comply with ASD-STE100 terminology.

[2] This term was introduced to comply with ASD-STE100 terminology.

[3] This term must not be used if the schedules are written to Specification ASD-STE100.

[4] This term must not be used if the schedules are written to Specification ASD-STE100.

[5] This term must not be used if the schedules are written to Specification ASD-STE100.

[6] This term must not be used if the schedules are written to Specification ASD-STE100.

[7] This term was introduced to comply with ASD-STE100 terminology.

Install again [1]

Install the item which has been previously removed. This task is to be done in accordance with authorized procedures and trade practices.

Look for ...

(A specified fault) Do a visual scrutiny for a specified fault. The item is to be cleaned as necessary only after initial examination and then examined again. The task is to be done using lighting and/or with the aid of a mirror, as necessary. Any fault found is to be reported to the supervisor. Remedial action is not to be done unless directed.

Look for damage

Do a visual scrutiny for general signs of damage. The task is to be done using lighting and/or with the aid of a mirror, as necessary. Any unserviceability found is to be reported to the supervisor. Remedial action is not to be done unless directed. Generally, the operation is to be conducted from ground level unless otherwise stated.

Authors' Note: This operation is the most detailed type of examination to be specified in a flight servicing.

Make sure that ... [2]

Verify that the specified conditions are correct. If the specified conditions are not correct, remedial action is to be done until they are. However, such remedial action is only to be done if it is within the capability of the individual concerned by virtue of the individual's rank, trade, training, physical ability and, where appropriate, certification. If it is not within the individual's capability, the supervisor is to be informed.

Operate

Put the item into its intended action to determine whether the item or system is serviceable and functions correctly. If the item or system is found to be unserviceable the supervisor is to be informed. Remedial action is not to be done unless directed.

Push[3]

To put a force on something that causes it to move away from the force.

Reconnect[4]

See 'Connect again'.

Record

Make a note of the reading(s) displayed on a dial, gauge or indicator and transcribe the reading(s) into the relevant Record Card or Log.

Refit[5]

See 'Install again'.

Remove

Correctly disconnect and detach the item from its mounting or position. This task is to be done in accordance with authorized procedures and trade practices.

Replace

Remove the item and install a new and/or serviceable item. This task is to be done in accordance with authorized procedures and trade practices.

---

[1] This term was introduced to comply with ASD-STE100 terminology.

[2] This term was introduced to comply with ASD-STE100 terminology.

[3] This term was introduced to comply with ASD-STE100 terminology.

[4] This term must not be used if the schedules are written to Specification ASD-STE100.

[5] This term must not be used if the schedules are written to Specification ASD-STE100.

Replenish[1]

See 'Fill'.

Survey[2]

See 'Do a zonal survey'.

Test[3]

See 'Do the *(specify)* test'.

Warnings[4]

Warnings are used to alert the reader to possible hazards which may cause loss of life, physical injury or ill health in any form.

Cautions

Cautions are used to denote the possibility of causing damage to equipment but not danger to personnel.

Notes[5]

Notes are used to convey, or draw attention to, information that is extraneous to the immediate subject of the text.

---

[1] This term must not be used if the schedules are written to Specification ASD-STE100.

[2] This term must only be used as a noun in conjunction with the action word 'Do' if the schedules are written to Specification ASD-STE100; eg, 'Do a zonal survey'.

[3] This term must only be used as a noun in conjunction with the action word 'Do' if the schedules are written to Specification ASD-STE100; eg, 'Do the *(specify)* test (MP XX-XX-X)'.

[4] The definition reflects that detailed in JSP 182.

[5] The definition reflects that detailed in JSP 182.

CHAPTER 1-5

SUPPLEMENTARY RULES

CONTENTS

Para

1 Introduction
2 Order of precedence for authoring rules
3 Skill level of schedules entries
4 Trade skills
5 Work card formats
5 Approved format
6 Chapter numbering
7 Positioning of chapter numbers
8 Card numbering
9 Discrete maintenance package
11 Flexible primary package
12 Flight servicing and operational requirements schedules
13 Deletion of material
13 Deletion of work cards
14 Deletion of blocks on work cards
15 Text writing rules
16 General rules
17 Indication of multiple items
18 Associated card indication
19 Warnings cautions and notes
19 Definitions
22 Location
25 Presentation

Figure Page

1 Positioning of chapter numbers 2
2 Discrete maintenance package 2
3 Example MOD Form 707MS 3
4 Combined topics 4
5 Flexible primary package 4
6 Flight servicing and operational requirements schedules 4
7 Associated card indication 6

INTRODUCTION

1 This chapter contains supplementary rules for schedules production. These rules are intended to make sure that schedules are produced to a consistent standard throughout.

ORDER OF PRECEDENCE FOR AUTHORING RULES

2 Where the rules detailed in this chapter conflict with the specific rules pertaining to a particular Topic 5 chapter, then the rules in the Topic 5 chapter apply.

SKILL LEVEL OF SCHEDULES ENTRIES

3 Aircraft maintenance schedules are to be written for use by personnel who are trained and experienced on type.

Trade skills

4 Operations are to be written to the skill levels defined in AP 3376A, Aircraft Engineering Trade Specifications, and are not to contain instructions which are basic trade knowledge.

WORK CARD FORMATS

Approved format

5 The approved format for work cards is the MOD Form 707MS, an example is shown at Fig 3. An alternative format MOD Form F707ES may be used for specialist avionic equipment.

Chapter numbering

6 The content of maintenance schedules is normally broken down into chapters, whereby each chapter represents a specific trade or trade group.

Positioning of chapter numbers

7 The chapter number is positioned on the maintenance work card or flight servicing card immediately below the AP and section details as shown in Figure 1.

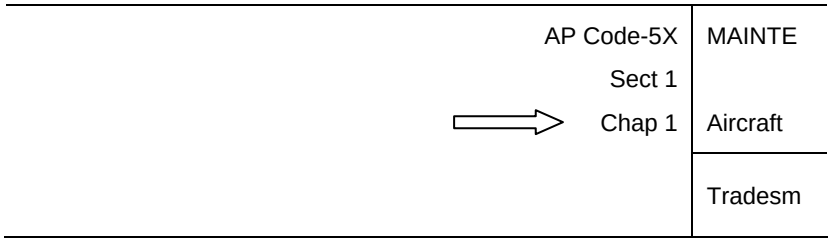

Figure 1 Positioning of chapter numbers

CARD NUMBERING

8 Cards are numbered using a logical sequence. The methods used are listed below, with examples of each type.

Discrete maintenance package

9 The cards are numbered in a single numerical sequence throughout the schedule and presented as shown in Figure 2.

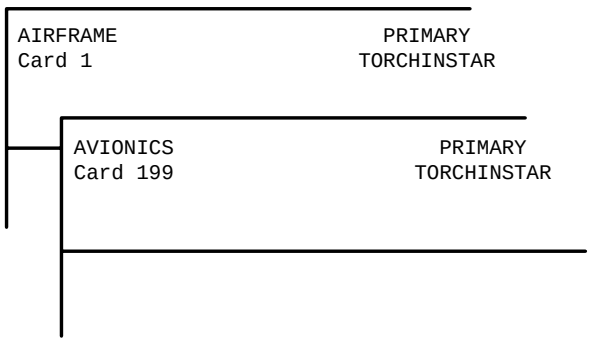

Figure 2 Discrete maintenance package

AIRCRAFT Card 13	BASIC 1 AIRCRAFT NAME	Ap Code-5C&D 2nd Edition Sect 1 Chap1	Maintenance Record Aircraft or Equipment Serial No: Date:	MOF Form707MS (Revised Jan 01)

INFORMATION IN THE TOPIC 5A2 IS TO BE CONSULTED THROUGHOUT THE WORK DETAILED ON THIS CARD			Tradesman		Brief details of Suspected fault(s} And SNOW(s}	Supervisor	
Associated Cards	Power	Code	Man Hrs	Certification and TDM		Man Hrs	Certification and TDM
12	N/A						
Block 1 ENGINE TURBOPROP - COMPRESSOR SECTION Zone 481/482 7230003 Compressor scroll. Examine (AMM PN-A-71-00-00-00A-281A-A). 7230004 Compressor scroll to Pc filter tube assembly. Examine (AMM PN-A-71-00-00-00A-281A-A). 7230004 Compressor discharge air tube (2 off). Examine (AMM PN-A-71-00-00-00A-281A-A). 7230004 Compressor mounting insert (5 off). Examine (AMM PN-A-71-00-00-00A-281A-A).							
BLOCK 2 ENGINE TURBOPROP - COMBUSTION Zone 481/482 7240001 Burner drain valve. Clean (Removed) (AMM PN-A-72-40-15-00A-251A-A).							
E0004MW(18)							

Figure 3 Example MOD Form 707MS

10 The cards of combined topics are to be numbered in a single numerical sequence throughout the schedule and presented as shown in Figure 4.

```
AIRFRAME                PRIMARY/MINOR/MAJOR
Card 1                      TORCHINSTAR

    AVIONICS              PRIMARY/MINOR/MAJOR
    Card 899                  TORCHINSTAR
```

Figure 4 Combined topics

Flexible primary package

11 Maintenance groups in a flexible primary package are annotated alphabetically from A to Z, as required. The cards are numbered sequentially within each group, starting with card 1 at the beginning of each new group as shown in Figure 5.

```
AIRFRAME                      GROUP A
Card A1                     TORCHINSTAR

    AIRFRAME                      GROUP C
    Card C1                     TORCHINSTAR
```

Figure 5 Flexible primary package

Flight servicing and operational requirements schedules

12 The cards of flight servicing and operational requirements schedules are numbered in a numerical sequence for each chapter in the schedule. The number is placed below the trade/skill speciality specified to do the work as shown in Figure 6.

```
MAN B                  BEFORE FLIGHT
Card 1                  TORCHINSTAR

    AIRFRAME                TURN ROUND
    Card 1                 TORCHINSTAR

        WEAPONS NCO           OPERATIONAL READINESS
        Card 1                  LOADING OF WEAPONS
                                    TORCHINSTAR
```

Figure 6 Flight servicing and operational requirements schedules

DELETION OF MATERIAL

Deletion of work cards

13 When all the information on a work card is deleted, the work card remains in sequence in the schedule in order to avoid amendment of the contents sheet and renumbering all the following cards. Annotate in the centre of the text area of the work card is annotated with the amendment that caused the deletion in the following manner:

Maintenance deleted by Amdt XX.

Deletion of blocks on work cards

14 When a block is deleted from a work card the deletion is not to be indicated on the work card except by the amendment indicator, which is aligned with the card number.

TEXT WRITING RULES

15 The text of any maintenance schedule conveys technical information to the tradesman. The following rules are designed to make sure that a common standard of output is maintained regardless of the input source.

General rules

16 The following general rules are to be applied to maintenance schedules text:

1.1 Layout and presentation are to be as detailed in the relevant topic chapters of this publication.

1.2 Instructions are to be clear and unambiguous.

1.3 Use terms from the authorized glossary wherever possible. It will not always be possible to find a suitable term in the glossary and the meaning of the text is not to be compromised by attempting to use only the terms in the glossary.

1.4 Use the correct nomenclature for items and make sure that they are consistent throughout the schedule.

1.5 Proprietary trade names are only to be used when the item nomenclature includes the name eg 'Dzus' fastener.

1.6 Switch positions and panel markings are to appear exactly as marked on the equipment. However, symbols on panel markings, such as the symbol for 'ohm' or 'alpha', may be spelled out in text if it is not possible to produce the symbol.

1.7 The first word of a text entry is to begin with an initial capital letter.

1.8 Text entries are to end with a full stop to indicate that the entry is complete.

1.9 Entries which are contained in brackets within another entry are to begin the first word with an initial capital letter.

Indication of multiple items

17 The quantity of items is to be shown in brackets as follows:

Bolt (12 off).

Associated card indication

18 Associated cards are to be referred to as shown in Figure 7.

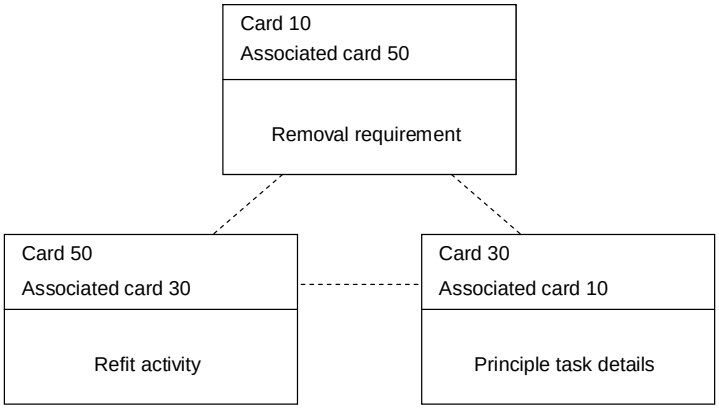

Figure 7 Associated card indication

WARNINGS CAUTIONS AND NOTES

Definitions

19 Warnings alert the user to possible hazards which may cause loss of life, physical injury or ill health if the instructions in the text are not followed precisely. Warnings are to give the hazard and the result or reason unless this is obvious.

20 Cautions tell the user that damage to equipment is possible if the instructions in the text are not followed precisely. Cautions are to give the hazard and the result or reason unless this is obvious.

21 Notes are used to give the user additional information which is helpful but does not belong to the immediate subject. Notes are not to take the place of procedural information.

Location

22 Warnings are to immediately precede the text to which they refer. Warnings of a general nature which are applicable throughout a procedure can be placed at the beginning of the procedure to save repetition.

23 Cautions are to immediately precede the text to which they refer. Cautions of a general nature which are applicable throughout a procedure can be placed at the beginning of the procedure to save repetition.

24 Notes are to precede the text to which they refer.

Presentation

25 Warnings and Cautions are to be numbered if there is more than one. Notes may be numbered to assist cross-referencing to the text.

26 Warnings, Cautions and Notes for existing and revised publications are as presented in JSP 182.

27 Warnings, Cautions and Notes for new publications are to be presented as detailed in ASD Specification S1000D.

CHAPTER 2-0

STANDARD PRELIMINARY PAGES

CONTENTS

Para

1 Introduction
3 Common preliminary pages
8 Other preliminary pages

Table Page

1 Record of AILs and SALs - applicability 2

Figure Page

1 Example of a front cover - initial issue 3
2 Example of a front cover - superseding edition 4
3 Example of a front cover - superseding publication 5
4 Example of a landscape A4 amendment record (recto) 6
5 Example of a landscape A4 amendment record (verso) 7
6 Example of a portrait A4/A5 amendment record (recto) 8
7 Example of a portrait A4/A5 amendment record (verso) 9
8 Example of a landscape A4 record of AILs and SALs (recto) 10
9 Example of a landscape A4 record of AILs and SALs (verso) 11
10 Example of a portrait A4/A5 record of AILs and SALs (recto) 12
11 Example of a portrait A4/A5 record of AILs and SALs (verso) 13

INTRODUCTION

1 The preliminary pages of a maintenance schedules publication constitute that material which precedes the main contents of the publication. They identify and authorize the publication and, as necessary, provide for the recording of amendments, explain the arrangement of the publication contents, and give administrative and technical guidance. Preliminary pages are identified by Roman numerals in parenthesis.

2 This chapter deals with the standard preliminary pages that are common to all maintenance schedules. It also contains examples of the more widely used preliminary pages. The requirements for each particular schedule are to be found in the relevant chapters of this publication.

COMMON PRELIMINARY PAGES

3 The first leaf is the front cover numbered as Page (i)/(ii). The front cover has the publication number followed by the edition number (for editions subsequent to the first), and by the edition issue date in full. Example presentations of front covers are shown in Figures 1, 2 and 3. These examples apply equally to the presentation of both A4 and A5 front covers. Front covers are coloured to reflect the security grading of the publication.

4 The second leaf is the amendment record numbered as Page (iii)/(iv) if single sided or as Page (iii) and Page (iv) if double sided. Example presentations of A4 and A5 amendment records are shown in Figures 4 to 7.

5 The third leaf is used to record the incorporation of Advance Information Leaflets (AIL) and Service Amendment Leaflets (SAL) numbered as Page (v)/(vi) if single sided or as Page (v) and Page (vi) if double sided. Table 1 shows which schedules include a Record of AILs and SALs. Schedules not listed may include a Record of AILs and SALs if required by the relevant Platform PT. Example presentations of A4 and A5 Records of AILs and SALs are shown in Figures 8 to 11.

TABLE 1 RECORD OF AILs AND SALs - APPLICABILITY

5A1	Master maintenance list
5A2	Hazard and maintenance information
5A6	Weapon loading/off-loading procedures
5B1/1A	Flight servicing/COMM schedules
5B2/2A	Primary/flexible primary schedule
5C	Minor schedule
5(CTY)	Contingency maintenance schedule
5D	Major schedule
5T	Operational turn round schedule
5U1/5U2/5U3	Operational readiness servicing schedules

6 The next leaf in order is a page showing the contents of the schedule. Example presentations of Contents pages are shown in the chapters dealing with each schedule type.

7 The Contents page is followed by an Introduction. Example presentations of Introduction pages are shown in the chapters dealing with each schedule type.

OTHER PRELIMINARY PAGES

8 The preliminary pages that are specific to a particular maintenance schedule are not listed in this chapter due to their limited application. They are, however, included in the chapters dealing with each schedule type.

AP Code-XXX
Month Year

Ministry of Defence

MAIN TITLE

SUB TITLE

Sponsored for use within
UK Military Aviation
by
(Designated) PTL

Publication Organization:
as nominated by Sponsor

Service users should send their comments
through the channel prescribed for the purpose in:

►MAP-01 Chapter 8 ◄

Page (i)/(ii)

Figure 1 Example of a front cover - initial issue

AP Code-XXX
X Edition Month Year
(Superseding X Edition
Dated Month Year)

Ministry of Defence

MAIN TITLE

SUB TITLE

Sponsored for use within
UK Military Aviation
by
(Designated) PTL

Publication Organization:
as nominated by Sponsor

Service users should send their comments
through the channel prescribed for the purpose in:

►MAP-01 Chapter 8 ◄

Page (i)/(ii)

Figure 2 Example of a front cover – superseding edition

AP Code-XXX
Month Year
(Superseding AP Code-XXX
X EditionDated Month Year)

Ministry of Defence

MAIN TITLE

SUB TITLE

Sponsored for use within
UK Military Aviation
by
(Designated) PTL

Publication Organization:
as nominated by Sponsor

Service users should send their comments
through the channel prescribed for the purpose in:

►MAP-01 Chapter 8◄

Page (i)/(ii)

Figure 3 Example of a front cover – superseding publication

SCHEDULE TYPE
AIRCRAFT NAME

AP Code-XXX

AMENDMENT RECORD

Amdt No.	Date of Issue	Incorporated by (Signature)	Date		Amdt No.	Date of Issue	Incorporated by (Signature)	Date
1					13			
2					14			
3					15			
4					16			
5					17			
6					18			
7					19			
8					20			
9					21			
10					22			
11					23			
12					24			

E1234 ( )

Page (iii)

Figure 4 Example of landscape A4 amendment record (recto)

AP Code-XXX

Amdt No.	Date of Issue	Incorporated by (Signature)	Date
25			
26			
27			
28			
29			
30			
31			
32			
33			
34			
35			
36			
37			

Amdt No.	Date of Issue	Incorporated by (Signature)	Date
38			
39			
40			
41			
42			
43			
44			
45			
46			
47			
48			
49			
50			

E1234 ( )

Page (iv)

Figure 5 Example of a landscape A4 amendment record (verso)

AP Code-XXX

SCHEDULE TYPE
AIRCRAFT NAME

AMENDMENT RECORD

Amdt No.	Date of Issue	Incorporated by (Signature)	Date
1			
2			
3			
4			
5			
6			
7			
8			
9			
10			
11			
12			
13			
14			
15			
16			
17			

E1234(1) Page (iii)

Figure 6 Example of a portrait A4/A5 amendment record (recto)

AP Code-XXX

Amdt No.	Date of Issue	Incorporated by (Signature)	Date
18			
19			
20			
21			
22			
23			
24			
24			
26			
27			
28			
29			
30			
31			
32			
33			
34			
35			
36			

E1234(1A) Page (iv)

Figure 7 Example of a portrait A4/A5 amendment record (verso)

SCHEDULE TYPE
AIRCRAFT NAME

AP Code-XXX

RECORD OF ADVANCE INFORMATION LEAFLETS (AIL)
AND SERVICE AMENDMENT LEAFLETS (SAL)

AIL/ SAL	Brief Details	Signal SIC and DIG or Reference	Deleted by Amdt

E1234 ( )

Page (v)

Figure 8 Example of a landscape A4 record of AILs and SALs (recto)

AP Code-XXX

AIL/ SAL	Brief Details	Signal SIC and DIG or Reference	Deleted by Amdt

E1234 ( )

Page (vi)

Figure 9 Example of a landscape A4 record of AILs and SALs (verso)

AP Code-XXX

SCHEDULE TYPE
AIRCRAFT NAME

RECORD OF ADVANCE INFORMATION LEAFLETS (AIL)
AND SERVICE AMENDMENT LEAFLETS (SAL)

AIL/ SAL	Brief Details	Signal SIC and DTG or Reference	Deleted by Amdt

E1234(2) Page (v)

Figure 10 Example of a portrait A4/A5 record of AILs and SALs (recto)

AP Code-XXX			
AIL/ SAL	Brief Details	Signal SIC and DTG or Reference	Deleted by Amdt
E1234(2A)			Page (vi)

Figure 11 Example of a portrait A4/A5 record of AILs and SALs (verso)

CHAPTER 3-0

AIRCRAFT TOPIC 5A1 MASTER MAINTENANCE SCHEDULE - GENERAL

CONTENTS

Para

1 Introduction

Table Page

1 Sub-chapters related to the sections of an MMS 1

INTRODUCTION

1 An aircraft Master Maintenance Schedule (MMS) is the master control document for each aircraft maintenance schedule within a series. It is used to make sure that that all scheduled and out-of-phase maintenance operations necessary to maintain an aircraft are properly identified. The content of the MMS is authorized by the relevant aircraft Project Team (PT).

2 The MMS may be divided into six sections, each of which is described in an associated sub-chapter of this publication as shown in Table 1.

TABLE 1 SUB-CHAPTERS RELATED TO THE SECTIONS OF AN MMS

Sub-chapter	MMS Section	
Chap 3-1	Preliminary pages	(Mandatory)
Chap 3-2	Section 1 - Master Maintenance List	(Mandatory)
Chap 3-3	Section 2 - Component Replacement List	(Mandatory)
Chap 3-4	Section 3 - Component Life Register	(Optional)
Chap 3-5	Section 4 - Scheduled and Out-of-phase Maintenance Register	(Optional)
Chap 3-6	Section 5 - Component Fatigue Factor Tables	(Optional)

CHAPTER 3-1

AIRCRAFT TOPIC 5A1 PRELIMINARY PAGES

CONTENTS

Para

1 Introduction
2 Details of an aircraft Topic 5A1 preliminary pages.
3 Front cover
4 Amendment record
5 Record of Advance Information Leaflets (AIL) and Service Amendment Leaflets (SAL)
6 List of contents
7 Introduction
8 List of pre-issue maintenance items
9 List of servicing instructions incorporated in the schedule
10 Modification standard
11 List of aircraft components/sub-assemblies requiring record/ log cards
12 List of systems and sub-systems
13 Zonal plan

Figure Page

1 Example of an MMS amendment record (recto) 4
2 Example of an MMS amendment record (verso) 5
3 Example of an MMS contents page 6
4 Example 1 of an MMS introduction page 7
5 Example 2 of an MMS introduction page 8
6 Example 3 of an MMS introduction page 9
7 Example 4 of an MMS introduction page 10
8 Example 5 of an MMS introduction page 11
9 Example 6 of an MMS introduction page 12
10 Example 7 of an MMS introduction page 13
11 Example 8 of an MMS introduction page 14
12 Example 9 of an MMS introduction page 15
13 Example 10 of an MMS introduction page 16
14 Example of an MMS LITS specific introduction page..... 17
15 Example of an MMS list of pre-issue maintenance items page 18
16 Example of an MMS list of servicing instructions incorporated page 19
17 Example of an MMS modification standard page 20
18 Example of an MMS list of components or sub-assemblies requiring record/log cards page 21
19 Example 1 of an MMS list of systems and sub-systems page 22
20 Example 2 of an MMS list of systems and sub-systems page 23
21 Example 1 of an MMS zonal plan page 24
22 Example 2 of an MMS zonal plan page 25

INTRODUCTION

1 As explained in Chapter 2, the preliminary pages of a maintenance schedules publication constitute that material which precedes the main contents of the publication. The purpose of this chapter is to provide a more detailed explanation of the preliminary pages that are specific to an aircraft Topic 5A1 Master Maintenance Schedule (MMS).

DETAILS OF AN AIRCRAFT TOPIC 5A1 PRELIMINARY PAGES

2 The following paragraphs provide details of the MMS preliminary pages in the order that they are presented in the publication.

Front cover

3 The front cover forms the title page of the MMS as explained in Chapter 2. Examples of front covers are presented in Chapter 2-0, Figures 1 to 3.

Amendment record

4 In addition to recording the incorporation of amendments to the MMS, the Amendment Record contains additional blocks that are used to record the details of associated amendments incorporated in dependent topics and any associated electronic maintenance management database. An example MMS Amendment Record is shown in Figures 1 and 2.

Record of Advance Information Leaflets (AIL) and Service Amendment Leaflets (SAL)

5 As explained in Chapter 2, the Record of AILs and SALs is used to record the incorporation of AILs and SALs and when these are superseded by formal amendments. An example of an MMS Record of AILs and SALs is shown in Chapter 2-0, Figures 8 and 9.

Contents

6 An example of an MMS Contents page is shown in Figure 3.

Introduction

7 In addition to detailing the periodicity and type of maintenance to be used, the introduction explains the construction and use of the MMS and its dependent topics, as applicable. Examples of MMS Introduction pages are shown in Figures 4 to 14. Figure 14 illustrates the additional information that is detailed for aircraft that operate using a Logistics Information Technology System (LITS) maintenance management system.

List of pre-issue maintenance items

8 Bay maintained components, which have scheduled maintenance requirements whilst fitted to the aircraft, may be removed for bay maintenance, corrective maintenance or fitting to another aircraft. Those maintenance actions necessary to synchronize the on aircraft maintenance cycle of the component with that of the recipient aircraft must be completed prior to fitting the component. A separate list of applicable maintenance actions is maintained for ease of control and as a cross-reference between the MML, bay maintenance schedule or Aircraft Maintenance Manual (AMM). An example of an MMS List of Pre-issue Maintenance Items page is shown in Figure 15.

List of servicing instructions incorporated in the schedule

9 All Servicing Instructions (SI) incorporated into the schedule are detailed in a separate list. An example of an MMS List of Servicing Instructions Incorporated in the Schedule page is shown in Figure 16.

Modification standard

10 The Modification Standard page is used to specify the aircraft/equipment modification standards to which the schedule is written. An example of an MMS Modification Standard page is shown in Figure 17.

List of aircraft components/sub-assemblies requiring record/ log cards

11 All aircraft components (►MAP-01/02 series◄) which require record/log cards are listed on this page in SIN order. Part numbers are to be used only when the requirement is selective (eg modification state) or the component/sub-assembly is not subject to scheduled maintenance. When this list is published in the Topic 2(N/A/R)1, enter 'refer to Topic 2(N/A/R)1' only. An example of an MMS List of Aircraft Components/sub-assemblies Requiring Record/ log Cards page is shown in Figure 18.

List of systems and sub-systems

12 The allocation of the system/sub-systems into which the aircraft or equipment is divided for maintenance purposes is detailed in the List of Systems and Sub-systems page. An example of an MMS List of Systems and Sub-systems pages is shown in Figures 19 and 20.

Zonal plan

13 The Zonal Plan defines the various zones contained in an entire aircraft and allocates an appropriate identification number and description to each zone. The Zonal Plan is illustrated in the MMS preliminary pages only if a zonal plan is not provided in the Aircraft Topic 1. Examples of MMS Zonal Plan pages are shown in Figures 21 and 22.

MASTER MAINTENANCE SCHEDULE
AIRCRAFT NAME

AP Code-5A1
xx Edition

AMENDMENT RECORD

Amdt No.	Date of issue	Associated Topic Amendments											Amendment Incorporated	
		5A2	5B1	5B1A	5B2	5B2A	5(CTY)	5U3	LITS				Signature	Date
1														
2														
3														
4														
5														
6														
7														
8														
9														
10														
11														
12														
13														
14														
15														
16														
17														
18														

E1234 ( )

Page (iii)

Figure 1 Example of an MMS amendment record (recto)

AP Code-5A1
xx Edition

Amdt No.	Date of issue	Associated Topic Amendments											Amendment Incorporated	
		5A2	5B1	5B1A	5B2	5B2A	5(CTY)	5U3	LITS				Signature	Date
19														
20														
20														
21														
21														
22														
23														
24														
25														
26														
27														
28														
29														
30														
31														
32														
33														
34														
35														
36														

E01234 ( )

Page (iv)

Figure 2 Example of an MMS amendment record (verso)

MASTER MAINTENANCE SCHEDULE
AIRCRAFT NAME

AP Code-5A1
xx Edition

CONTENTS

Preliminary Material — Page

Front cover (Title page) ..... (i)/(ii)
Amendment record ..... (iii) and (iv)
Record of Advance Information Leaflets (AIL) ..... (v) and (vi)
Contents (This list) ..... (vii)/(viii)
Introduction ..... (ix) to (xviii)
List of pre-issue maintenance items ..... (xix)/(xx)
List of servicing instructions incorporated into this schedule ..... (xxi)/(xxii)
Modification standard ..... (xxiii)/(xxiv)
List of components or sub-assemblies requiring record/log cards ..... (xxv)/(xxvi)
List of systems and sub-systems ..... (xxvii) and (xxviii)
Zonal plan (If required) ..... (xxix)/(xxx) and (xxxi)/(xxxii)

Sections

1 Master Maintenance List
2 Component Replacement List
3 Component Life Register (If required)
4 Scheduled and Out-of-Phase Maintenance Register (If required)

E01234 ( )

Page (Vii)/(viii)

Figure 3 Example of an MMS contents page

MASTER MAINTENANCE SCHEDULE
AIRCRAFT NAME

AP Code-5A1
xx Edition

INTRODUCTION

CONTENTS

Para	
	Introduction
1	Maintenance system
	Periodicity
	Associated topic description
4	Topic 5A1 - Master Maintenance Schedule (MMS)
5	Topic 5A2 - Hazard and Maintenance Information
6	Topic 5B1 - Flight Servicing Schedule
7	Topic 5B2C&D - Primary, Minor and Major Maintenance Schedule
9	Topic 5B2A - Flexible Primary Maintenance Schedule
10	Topic 5(Cty) - Contingency Maintenance Schedule
11	Topic 5D - Major Maintenance Schedule
12	Topic 5U3 - Operational Readiness Servicing Schedule
13	Schedule Identification Number (SIN)
14	Servicing Instructions
15	Modification standard
16	Items requiring record/log cards
17	Trade abbreviations
19	Maintenance frequency abbreviations
20	General abbreviations
21	Aircraft zoning
22	Multi-skilled trades
	Amendments
23	Schedule amendments

E01234 ( )

Page (ix)

Figure 4 Example 1 of an MMS introduction page

AP Code-5A1
xx Edition

INTRODUCTION

Maintenance System

1 This Master Maintenance Schedule (MMS) has been produced in accordance with ▶MAP-01 Chapters 2, 5 and 8◀ and details the minimum maintenance requirements for the (aircraft name) aircraft.

2 This Topic 5A1 schedule is displayed in a periodic format.

PERIODICITY

3 The schedule is designed for a calendar based cycle of 8 Years as follows, with a flying hour upper limit for each maintenance package.

MAINTENANCE	FREQUENCY	TOPIC
Before Flight	▶MAP-01◀/ Maintenance Policy Statement Topic 2(N/A/R)1	5B1
Turn Round		
After Flight		
Waived Flight Servicing Mandatory Maintenance		
Operational Readiness Servicing	▶MAP-01◀	5U3

MAINTENANCE	FREQUENCY	UPPER FLYING LIMIT	TOPIC
Primary	3 Months	600	5B2/5B2A
Primary Star	6 Months	1200	5B2/5B2A
Primary Two Star	1 Year	2400	5B2/5B2A
Minor	2 Years	4800	5C
Minor Star	4 Years	9600	5C
Major	8 Years	19 200	5D

E01234 ( ) Page (x)

Figure 5 Example 2 of an MMS introduction page

MASTER MAINTENANCE SCHEDULE
AIRCRAFT NAME

AP Code-5A1
xx Edition

INTRODUCTION

ASSOCIATED TOPIC DESCRIPTION

Topic 5A1 - Master Maintenance Schedule (MMS)

4 The Topic 5A1 is divided into sections as follows:

4.1 Section 1 - Master Maintenance List (MML).

4.1.1 The MML is designed for use in the Military Air Environment and is a complete list of Forward and Depth scheduled in-phase and out-of-phase maintenance excluding fuel replenishments.

4.1.2 The MML lists maintenance requirements by aircraft system and sub-system.

4.1.3 Each sub-system is divided into items under headings that indicate location, maintenance operation, trade and frequency of operation. Where appropriate, work card numbers are annotated against an operation.

4.1.4 Where the 'Frequency' column contains an in-phase frequency, only the highest frequency is shown. However, that item/operation must also be done at all maintenance packages of a lower frequency (eg, Primary item/operations are also done at Primary Star, Primary Two Star, Minor, Minor Star, Minor Two Star and Major).

4.1.5 Certain operations are done by a trade other than the trade responsible for the item. The 'Trade' column shows the trade responsible for the item operation.

4.1.6 The MML does not include items concerned with preparation for or recovery from maintenance, i.e. removal of panels, jacking of aircraft and removal of components for access purposes. This information is contained on the work cards.

4.1.7 When an item is identified as a Structurally Significant Item (SSI) in accordance with ▶MRP RA5720◀, the item description is followed immediately by the identifier ‘(SSI)’. The identifier is to include the SSI number. SSI lists and illustrations can be found in the Topic 5V.

4.1.8 Operations that specify the survey of a zone are to be done by personnel who are authorized in accordance with ▶MAP-01 Chapter 5.3◀.

4.1.9 Operations that are not suitable for self-supervision are indicated by the code 'S' appearing in the column headed 'Code'.

4.1.10 Operations that are to be done to satisfy contingency maintenance requirements are annotated with the letters 'Cty' in the column headed 'Code'.

E01234 ( ) Page (xi)

Figure 6 Example 3 of an MMS introduction page

4.2 Section 2 - Component Replacement List (CRL).

4.2.1 The CRL is a complete list of components scheduled for replacement during the life of the aircraft. Items are listed in chapters by trade in SIN order. Location, frequency of removal and reason for removal are annotated against each component.

4.3 Section 3 - Component Life Register (CLR).

4.3.1 The CLR is a list of components that are replaced out-of-phase with scheduled maintenance. Items are listed in chapters that relate to various frequency parameters eg 'Flying Hours', 'Calendar Time', 'Miscellaneous' etc. Each item is allocated a CLR number in sequence and in order of ascending life. These CLR numbers provide a common standard of identification for the (aircraft name).

4.3.2 To assist in the forecasting of out-of-phase replacements, a copy of the CLR is included in the individual aircraft MOD Form 700 series.

4.3.3 Where like components are used on different marks of aircraft and there is a requirement to factor the life of the component due to the different operating parameters, the usage factor against that component in the CLR is to be applied in accordance with AP 101B-XXXX-2(N/A/R)1.

4.3.4 Maintenance activities that are not suitable for self-supervision are indicated by the code 'S' appearing in the column headed 'Code'.

4.3.5 Multiple CLR codes of the same frequency parameter may be grouped to facilitate LITS operations. A CLR code will be allocated and the grouped CLR codes presented as an annex at the end of each chapter. The use of Grouped CLR codes is optional and the individual codes can be used if required.

4.4 Section 4 - Scheduled and Out-of-Phase Maintenance Register (SOOPMR).

4.4.1 The SOOPMR is a list of scheduled maintenance and out-of-phase maintenance operations that have a defined frequency. Items are listed in chapters that relate to various frequency parameters eg 'Flying Hours', 'Calendar Time', 'Miscellaneous' etc. Miscellaneous ite standard of identification for the (aircraft name).

4.4.2 To assist in the control of out-of-phase maintenance, a copy of the SOOPMR is included in the MOD Form 700 series for each aircraft.

Figure 7 Example 4 of an MMS introduction page

MASTER MAINTENANCE SCHEDULE
AIRCRAFT NAME

AP Code-5A1
xx Edition

INTRODUCTION

4.4.3 Items that concern structural integrity are identified with the qualification 'SSI' after the item description. Policy for structural integrity is contained in ▶MRP RA5720◀.

4.4.4 Maintenance activities that are not suitable for self-supervision are indicated by the code 'S' appearing in the column headed 'Code'.

4.4.5 Operations that are to be done to satisfy contingency maintenance requirements are annotated with the letters 'Cty' in the column headed 'Code'.

4.4.6 Where like components are used on different Marks of aircraft and there is a requirement to factor the life of the component due to different operating parameters the usage factor is to follow the frequency.

4.4.7 Multiple OOP codes of the same frequency parameter may be grouped to facilitate LITS operations. An OOP code will be allocated and the grouped OOP codes presented as an annex at the end of each chapter. The use of Grouped OOP codes is optional and the individual codes can be used if required.

Topic 5A2 - Hazard and Maintenance Information (H&MI)

5 H&MI is used to provide tradesmen with a readily available reference to the relevant health and safety requirements, warnings, cautions and maintenance notes. Compliance with this information is mandatory during all aircraft maintenance activities and it is to be readily available to maintenance personnel at all times.

Topic 5B1 - Flight Servicing Schedule (FSS)

6 The FSS is written for use in an area based walk round sequence and contains flight servicing work cards, by sections, as required, for the following:

6.1 Section 1 - Before Flight Servicing.

6.2 Section 2 - Turn Round Servicing.

6.3 Section 3 - After Flight Servicing.

6.4 Section 4 - Waived Flight Servicing Mandatory Maintenance.

6.5 Annexes.

Authors Note:
This list will need to be adjusted to reflect the particular contents of the topic 5B1 as agreed with the platform PT.

E01234 ( )

Page (xiii)

Figure 8 Example 5 of an MMS introduction page

AP Code-5A1
xx Edition

TOPIC 5B2C&D - PRIMARY, MINOR AND MAJOR MAINTENANCE SCHEDULE

7 MMS items are amplified and displayed on work cards for use by maintenance personnel and contained in the Topic 5B2C&D under the following sections:

7.1 Section 1 - Primary.

7.2 Section 2 - Primary Star.

7.3 Section 3 - Primary Two Star.

7.4 section 4 - Minor.

7.5 Section 5 - Minor Star.

7.6 Section 6 - Major.

Authors Note:
1. If a discrete Major schedule is to be produced, this topic will be a topic 5B2&C and there will be no section 6.
2. If a topic 5B2C&D is to be produced, there will be no requirement for a topic 5D.

8 Each section of the Topic 5B2C&D is produced in basic format, that is the Primary contains only Primary items and the Primary Star contains only those items additional to the Primary and so on with the Minor, Minor Star and Major. Therefore, all cards of a higher frequency are to be satisfied in addition to those relating to the intended maintenance, e.g. Major = Primary work cards + Primary Star work cards + Primary Two Star work cards + Minor work cards + Minor Star work cards + Major work cards.

TOPIC 5B2A - FLEXIBLE PRIMARY MAINTENANCE SCHEDULE

9 The Topic 5B2A provides an alternative flexible maintenance package for the Primary and Primary Star items contained in the MML. These items are amplified and displayed on work cards for use by maintenance personnel and contained in the Topic 5B2A in 8 separate sections, each section containing one maintenance group.

9.1 The 8 maintenance groups cover a 176 day period in intervals of 22 days as follows:

Authors Note:
Divide the Primary frequency by 4 to give the maximum extension of 25% on Primary items.

DAYS	22	44	66	88	110	132	154	176
A	B	C	D	E	F	G	H	

The content of one Primary is spread over four groups and the content of one Primary Star is spread over eight groups thus in a 176 day period, 2 Primaries and 1 Primary Star will be done.

E01234 ( ) Page (xiv)

Figure 9 Example 6 of an MMS introduction page

MASTER MAINTENANCE SCHEDULE
AIRCRAFT NAME

AP Code-5A1
xx Edition

INTRODUCTION

9.2 Each maintenance group is designed to be done at any time in a forecast 22 day period, and the maintenance groups are to be forecast sequentially, e.g. Group A is due 0 to 22 days, Group B is due at 22 to 44 days etc. This flexibility of maintenance satisfies the requirements of ▶MAP-01◀ in that a maintenance anticipation or extension of 25 per cent is allowed within the maintenance periods. Any extension of maintenance outside the forecast periods may only be authorized by the platform PT.

TOPIC 5(CTY) - CONTINGENCY MAINTENANCE SCHEDULE

10 Contingency maintenance is compiled into work packages in the Topic 5(Cty). All flight servicing requirements are to be done during periods of contingency maintenance. The policy for contingency maintenance is contained in ▶MAP-01 Chap 5◀.

TOPIC 5D - MAJOR MAINTENANCE SCHEDULE

11 MMS items are amplified and displayed on work cards for use by maintenance personnel and contained in the Topic 5D. The Topic 5D contains a complete set of work cards to do a Major.

TOPIC 5U3 - OPERATIONAL READINESS SERVICING SCHEDULE

12 This Topic details the minimum amount of servicing required to maintain the aircraft in a state of readiness for a maximum period of 30 Days.

SCHEDULE IDENTIFICATION NUMBER (SIN)

13 Each item in the MML is allocated a SIN that identifies the item wherever it appears in the maintenance schedule. The SIN gives direct reference to the chapter and sub-chapter of the Aircraft Maintenance Manual (AMM) in which information on an item may be found.

Example: SIN 3248001

32 - System 32 - Landing Gear (AMM Chapter 32 - Landing Gear)

48 - Sub-system 48 - Parking Brake (AMM Sub-chapter 48 - Parking Brake)

The remaining digits 001 identify the item within the sub-system in the schedule. Assistance, preparation and recovery items on work cards are annotated with the SIN of the aircraft system and sub-system applicable to the preparation and recovery item with the last three digits designated '000'.

E01234 ( ) Page (xv)

Figure 10 Example 6 of an MMS introduction page

AP Code-5A1
xx Edition

SERVICING INSTRUCTIONS (SI)

14 SIs incorporated in this schedule are listed on a separate sheet following this introduction. In addition:

14.1 SIs issued between maintenance schedule revisions will be incorporated into the schedule, as required, by amendment action authorized by the PT. The operation will be annotated 'Introduced by SI/(aircraft name)/XX' to indicate its origin.

14.2 In-phase SI content of a simple nature is included in the work detailed on relevant work cards.

14.3 Out-of-phase SIs and SIs of a complex nature are produced as Maintenance Procedures (MP) and included in the Topic 1.

MODIFICATION STANDARD

15 The maintenance implications of certain modifications are incorporated in this maintenance schedule. Details of these modifications are included on a preliminary sheet following this introduction. Where the activity detailed depends on the modification standard of the individual aircraft, this is indicated in the MML and on the work cards.

ITEMS REQUIRING RECORD/LOG CARDS

16 For ease of identification, all items requiring Record/Log Cards are shown on the sheet following the modification standard.

E01234 ( ) Page (xvi)

Figure 11 Example 7 of an MMS introduction page

MASTER MAINTENANCE SCHEDULE
AIRCRAFT NAME

AP Code-5A1
xx Edition

INTRODUCTION

TRADE ABBREVIATIONS

17 This schedule has been written to include a single and multi-skilled workforce. The following trade abbreviations are used in this schedule:

Mech(AF)	-	Mechanical (Airframe)
Wpns	-	Weapons
AV(Elect)	-	Avionics (Electrical)
Mech(Prop)	-	Mechanical (Propulsion)
Av(AV)	-	Avionics (Avionics)
SE	-	Survival Equipment
NDT	-	Non-destructive testing
Ptr/Fnr	-	Painter and Finisher
Zonal	-	Zonal Survey

AUTHORS NOTE:
The abbreviations shown are legacy examples only. Appropriate abbreviations should be selected from the lists presented in Chapter 1-4.

18 Where single-skilled ground trade personnel are employed, the bracketed abbreviations e.g. (AF) represent single-skilled trades.

E01234 ( )

Page (xvii)

Figure 12 Example 8 of an MMS introduction page

MAINTENANCE FREQUENCY ABBREVIATIONS

19 The following maintenance frequency abbreviations are used in this schedule:

A/F - After Flight Servicing

B/F - Before Flight Servicing

T/R - Turn Round Servicing

WFSMM - Waived Flight Servicing Mandatory Maintenance

EER - Every Engine Removal

ORS - Operational Readiness Servicing

CMR - Certification Maintenance Requirement

P - Primary Maintenance

M - Minor Maintenance

MJ - Major Maintenance

AUTHORS NOTE:
The abbreviations shown are examples only. Appropriate abbreviations should be selected from the lists presented in Chapter 1-4.

AIRCRAFT ZONING

20 The aircraft is divided into zones, in accordance with ASD S1000D, to facilitate maintenance planning and the identification of work areas. Zonal work cards are in Chapter 9 of the relevant section of the maintenance schedule and are to be done by authorized tradesmen only.

INTRODUCTION OF MULTI-SKILLED TRADES

21 This Master Maintenance Schedule and associated topics were compiled prior to the introduction of the multi-skilled trades Aircraft Maintenance Mechanic, Aircraft Technician (Mechanical) and Aircraft Technician (Avionics). The existing trades of Airframe, Propulsion, Avionics and Electrical will therefore continue in use until a general revision is done.

SCHEDULE AMENDMENTS

22 This schedule is written to JAP(D) 100C-20 specification. Vertical lines in the left hand margin indicate new or amended matter. Amendment procedure is shown in ▶MAP-01 Chapter 8◀.

Figure 13 Example 8 of an MMS introduction page

MASTER MAINTENANCE SCHEDULE
AIRCRAFT NAME

AP Code-5A1
xx Edition

INTRODUCTION

4 (Continued)

4.1 Section 1 - Master Maintenance List (MML) (Contd)

4.1.11 Items that have an out of phase examination will have an equipment type and an SMT code allocated to enable LITS tracking.

4.1.12 Multiple items of the same frequency parameter may be grouped to facilitate LITS operations. A 'Preferred' OOP code will be allocated. Use of the Grouped OOP code is optional and the individual codes can be used if required.

4.2 Topic 5A1 Section 2 - Component Replacement List (CRL).

4.2.1 The CRL is a complete list of components scheduled for replacement during the life of the aircraft. Items are listed in chapters by trade in SIN order. Location, frequency of removal and reason for removal are annotated against each component.

4.2.2 Where components are used on different Mks of aircraft and there is a requirement to factor the life of the component due to differing operating parameters, the usage factor against that component in the CRL is to be applied in accordance with AP Code-2(N/A/R)1.

4.2.3 Part numbers designated (HLA) are High Life Aircraft components which have been given new lifing policies.

4.2.4 Items that are out of phase will have an equipment type, SMT code and an OOPS code allocated to enable LITS tracking.

Topic 5A2 - Hazard and Maintenance Information (H&MI)

5 H&MI is used to provide tradesmen with a readily available reference to the relevant health and safety requirements, warnings, cautions and maintenance notes. Compliance with this information is mandatory during all aircraft maintenance activities and it is to be readily available to maintenance personnel at all times.

E01234 ( )

Page (xi)

Figure 14 Example 8 of an MMS LITS specific introduction page

MASTER MAINTENANCE SCHEDULE
AIRCRAFT NAME

AP Code-5A1
xx Edition

LIST OF PRE-ISSUE MAINTENANCE ITEMS

System/ Sub-system	Item	Publication detailing maintenance
2411	IDG	AP101B-XXXX-1X
2411	IDG QAD Adapter	"
2411	IDG Magnetic Plug	"
2411	IDG Charge Filter	"
2411	IDG Scavenge Filter	"
2424	APU Generator Adapter	"
2424	APU Generator Adapter Oil Filter	"
3021	Pneumatic Relief valve	"
4911	APU Variable Orifice Air Filter	"
4921	APU Oil Filter	"
4921	APU Bleed Valve Filter Element	"
4921	APU Bleed Valve Filter Multiple	"
	Connector Assembly	"
4931	APU Fuel Filter Element	"
4941	APU Starter Clutch	AP101B-XXXX-1X1
4951	IGV Air Filter Element	"
7100	Power plant - General	"
7170	Fuel Drains Collector Tank Ejector	"
	Inlet Filter	"
7201	Master Chip Detector (Blue)	"
7201	Fine Scavenge Filter	"
7201	Location Bearing Chip Detector	"
	(Yellow)	"
7201	HS Gearbox Chip Detector	"
7203	Hoop Plate	"
7231	LP Compressor Rotor Blades	"
7231	LP Compressor Case and Vanes	"
7231	LP Compressor OGVs	"
7231	LP Compressor Blade Strut (Clappers)	"
7231	OGV Fillet Radius Filler	"
7254	Exhaust	"
7263	Oil Pressure Filter	"
7311)	Fuel Spray Nozzle Retaining Bolts	"
7311)		

System/ Sub-system	Item	Publication detailing maintenance
7311	LP Fuel Filter	AP101B-XXXX-1X
7331	HP Fuel Return Tube	"
7421	Igniter	"
7533	Centrisep Switch	"
7611	Control Cable and FFR Box Rack	"
	Dovetails	"
7611	FFR Box Gear Selector	"
7831	Thrust Reverser	"
7831	Thrust Reverser Air Motor	AP101B-XXXX-1X1
7831	Translating Cowl Screw Jack Rear	"
	Bearing	"
8011	Starter	"
8011	Starter Valve Filter	"
8011	Starter Magnetic Plug	"
8011	Starter Motor QAD Adapter	"

E01234 ( )

Page (xix)/(xx)

Figure 15 Example of an MMS list of pre-issue maintenance items page

MASTER MAINTENANCE SCHEDULE
AIRCRAFT NAME

AP Code-5A1
xx Edition

LIST OF SERVICING INSTRUCTIONS INCORPORATED IN THIS SCHEDULE

Trade	SIN	SI Title	Topic	Trade	SIN	SI Title	Topic
Mech(AF)	2740002	SI/XXXX/002	AP101B-XXXX-XX				

E01234 ( )

Page (xxi)/(xxii)

Figure 16 Example of an MMS list of servicing instructions incorporated page

MASTER MAINTENANCE SCHEDULE
AIRCRAFT NAME

AP Code-5A1
xx Edition

MODIFICATION STANDARD

This maintenance schedule has been written to the following modification standard:

1 The maintenance implications of the following modifications have been included in the Post Mod state only and are not annotated:

2 The maintenance implications of the following modifications have been included in the Pre and/or Post Mod state and are so annotated:

1415, 1243, 1649, 1695, 1891, 5095, 5288, 5404, 5410, 11258, 14023, 14072, 31216, 31445, 41023, 41254

3 The maintenance implications of the following modifications have been included by amendment action between revisions in the Pre and/or Post Mod state and are so annotated:

E01234 ( )

Page (xxiii)/(xxiv)

Figure 17 Example of an MMS modification standard page

MASTER MAINTENANCE SCHEDULE
AIRCRAFT NAME

AP Code-5A1
xx Edition

LIST OF COMPONENTS OR SUB-ASSEMBLIES REQUIRING RECORD/LOG CARDS

SIN Part No.	Item	Form	SIN Part No.	Item	Form
All	Outboard Aileron Damper	735A			
All	Rudder Damper	735A			
All	Elevator Damper	735A			
All	Horizontal Stabiliser Actuator	735A			
All	Lower Attachment Pin	735A			
All	Slat Actuator	735A			
All	Ram Air Turbine	735A			
All	Digital Flight Data Recorder	735A			
All	MLG Assembly	735A			
All	NLG Assembly	735A			
All	Cockpit Voice Recorder	735A			
All	Evacuation Slide	735A			
All	Survival Pack	735A			
All	Nickel Cadmium Battery	780			
All	Emergency Power Pack	780			
All	INS Battery	780			
All	APU	749/735A/Log Book			
All	ECU	749/735A/Log Book			
All	MLG Actuator	735A			
All	NLG Actuator	735A			
All	Probe	735A			
All	224 in3 Fire Extinguisher	735A			
All	630 in3 Fire Extinguisher	735A			
All	1400 in3 Fire Extinguisher	735A			
All	2500 in3 Fire Extinguisher	735A			
All	Water Boiler	735A			
All	Coffee Maker	735A			

E01234 ( )

Page (xxv)/(xxvi)

Figure 18 Example of an MMS list components or sub-assemblies requiring record/log cards page

MASTER MAINTENANCE SCHEDULE
AIRCRAFT NAME

AP Code-5A1
xx Edition

LIST OF SYSTEMS AND SUB-SYSTEMS

00 AIRCRAFT GENERAL

00 General

06 ZONES AND DIMENSIONS

00 General

08 LEVELLING AND WEIGHING

30 Weighing

12 SERVICING

20 Scheduled Servicing

21 ENVIRONMENTAL CONTROL

20 Distribution
40 Heating

22 AUTO FLIGHT

11 Aileron Autopilot Servo System
12 Elevator Autopilot Servo System
13 Elevator Trim Autopilot Servo System

23 COMMUNICATIONS

60 Static Discharging
70 Voice Recording System

24 ELECTRICAL POWER

00 General
30 DC Generation
70 Electrical Monitoring and Protection

25 EQUIPMENT AND FURNISHINGS

00 General
10 Flight Compartment
20 Passenger Compartment
22 Passenger Seats
23 Rear Crew Seat
60 Emergency Equipment
61 ELT 910 System

26 FIRE PROTECTION

10 Detection
20 Extinguishing

27 FLIGHT CONTROLS

00 General
10 Aileron
20 Rudder
25 Rudder Trim
30 Elevator
32 Elevator Trim
33 Stall Warning System
50 Flaps

28 FUEL

10 Storage
20 Distribution
21 Fuel Cock System
22 Wing Tip Tanks
40 Indicating

30 ICE AND RAIN PROTECTION

10 Airfoil
20 Air Intakes

31 INDICATING AND RECORDING SYSTEMS

31 Fatigue Meter System

32 LANDING GEAR

10 Main Gear
20 Nose Gear
40 Wheels and Brakes
50 Nosewheel Steering

33 LIGHTS

40 External Lights

34 NAVIGATION

11 Pitot/Static System
20 Attitude and Direction
23 Standby Compass
43 Doppler System
54 ATC Transponder System

37 VACUUM

00 General

52 DOORS

10 Passenger/Crew
41 Rear Avionics Bay Door
70 Door Warning

E01234 ( )

Page (xxvii)

Figure 19 Example 1 of an MMS list of systems and sub-systems page

AP Code-5A1
xx Edition

53 FUSELAGE

10 Front Fuselage
20 Centre Fuselage
30 Rear Fuselage

54 NACELLES/PYLONS

10 Nacelle Section

55 STABILIZERS

10 Horizontal Stabilizer
20 Elevator
21 Elevator Trim Tab
30 Fin
40 Rudder
41 Rudder Trim Tab

56 WINDOWS AND CANOPIES

10 Flight Compartment
20 Fuselage Compartment
30 Door

57 WINGS

00 General
10 Centre Wing
20 Inner Wing
30 Outer Wing
50 Trailing Edge and Trailing Edge Devices
60 Ailerons
61 Aileron Mass Balance

61 PROPELLERS

10 Propeller Assembly
20 Controlling

71 POWER PLANT

00 General
10 Cowlings
21 Engine Mounting Frame
22 Engine Mounts
60 Air Intakes

72 ENGINE TURBOPROP

00 General
30 Compressor Section
40 Combustion

73 ENGINE FUEL AND CONTROL

10 Distribution
20 Controlling

74 IGNITION

00 General

75 ENGINE AIR

10 Engine Anti Icing
30 Compressor Control

76 ENGINE CONTROLS

10 Power Control

78 EXHAUST

10 Collector/Nozzle

79 OIL

00 General
20 Distribution

99 ELECTRONIC WARFARE

11 Infra Red Jammer System
70 Directional Infra Red Counter Measure (DIRCM)

E01234 ( )

Page (xxviii)

Figure 20 Example 2 of an MMS list of systems and sub-systems page

MASTER MAINTENANCE SCHEDULE
AIRCRAFT NAME

AP Code-5A1
xx Edition

ZONAL PLAN

100	FORWARD FUSELAGE BELOW COCKPIT FLOOR	500	LEFT MAINPLANE
111	Lower Electronics Compartment	511	Wing Centre to Stn 49
121	Fuselage underfloor, Stn 46 to 219.25	521	Wing Stn 49 to 179
131	Fuselage underfloor, Stn 219.25 to 255.25	531	Wing Stn 179 to 294
		541	Flap Assembly
200	FORWARD FUSELAGE ABOVE COCKPIT FLOOR	551	Aileron Assembly
211	Nose Cone	600	RIGHT MAINPLANE
221	Upper Electronics Compartment		
231	Flight Compartment, Stn 46 to 71.5	611	Wing Centre to Stn 49
241	Fuselage Stn 71.5 to 218.25	621	Wing Stn 49 to 179
251	Fuselage Stn 218.25 to 352.4	631	Wing Stn 179 to 294
261	Fuselage Stn 352.4 to 408.45	641	Flap Assembly
271	Tail Cone	651	Aileron Assembly
300	CENTRE, REAR FUSELAGE AND EMPENNAGE	700	UNDERCARRIAGE
311	Dorsal Fin	711	Nose Undercarriage
321	Rudder	731	Main Undercarriage (Left)
331	Tailplane (Left)	741	Main Undercarriage (Right)
341	Tailplane (Right)		
351	Elevator	800	ACCESS DOORS
400	POWERPLANT INSTALLATION	811	Cockpit Door
		821	Forward Passenger Door
411	Powerplant (Left)	831	Aft Passenger Door
421	Powerplant (Right)	851	Baggage Compartment Door
431	Propeller Assembly (Left)		
441	Propeller Assembly (Right)		
451	Nacelle Aft of Firewall (Left)		
461	Nacelle Aft of Firewall (Right)		

E01234 ( )

Page (xxix)/(xxx)

Figure 21 Example 1 of an MMS zonal plan page

MASTER MAINTENANCE SCHEDULE
AIRCRAFT NAME

AP Code-5A1
xx Edition

ZONAL PLAN

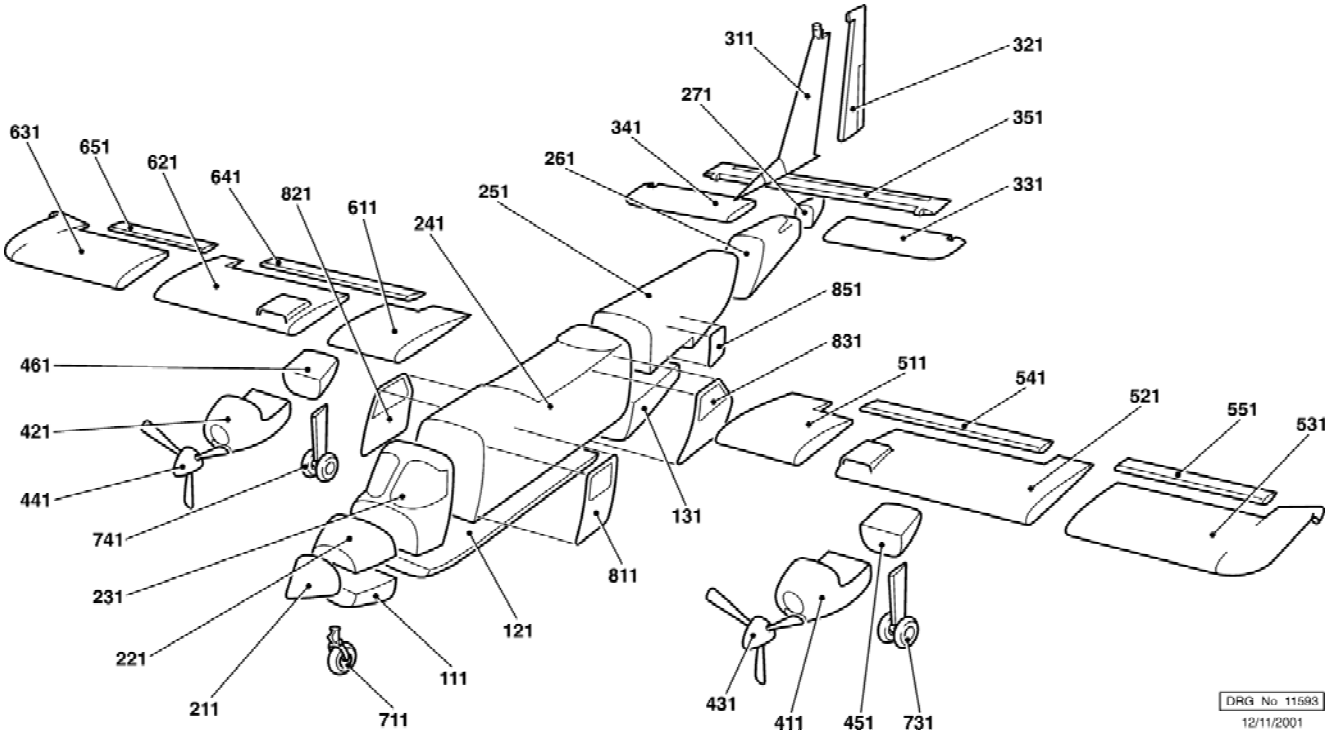

Fig 1 Zonal Plan

E01234 ( )

Page (xxxi)/(xxxii)

Figure 22 Example 2 of an MMS zonal plan page

CHAPTER 3-2

AIRCRAFT TOPIC 5A1 SECTION 1 – MASTER MAINTENANCE LIST

CONTENTS

Para

1 General
2 Compilation
3 Amendment
4 Example MML pages

Figure Page

1 Example MML section 1 page 1/2 (number of pages) 5
2 Example MML section 1 first and verso pages (hard copy build-up schedule) 6
3 Example MML section 1 recto page (hard copy build-up schedule) 7
4 Example MML section 1 page (equalized schedule) 8
5 Example MML section 1 page (schedule with flexible primary maintenance) 9
6 Example MML section 1 page (LITS schedule) 10
7 Example MML section 1 page (LITS schedule without MML sections 3 and 4) 11
8 Example MML section 1 page (flex-ops schedule) 12

GENERAL

1 The content of the Master Maintenance List (MML) is a transcription of the maintenance task recommendations derived from Reliability Centred Maintenance (RCM) analysis as approved by the platform PT. The layout of each MML is to be decided by the relevant platform PT using the guidance provided in this publication, with the following basic data requirements:

1.1 System and sub-system identification.

1.2 Schedule Identification Number (SIN).

1.3 Zone.

1.4 Item to be maintained.

1.5 Operation to be done.

1.6 Mark applicability.

1.7 A code annotation to depict specific skill or applicability requirements.

1.8 The trade responsible for the relevant 'on aircraft' operation.

1.9 Frequency/maintenance group of each operation.

1.10 Work card numbers (if applicable).

1.11 Flex-op numbers (if applicable).

1.12 LITS Schedule Maintenance Task (SMT) codes (if applicable).

COMPILATION

2 A system and sub-system method is used in the compilation of the MML. The structure and systems of the aircraft are divided in the same pattern as that used in the aircraft maintenance manuals, which have a chapter allocated to each system and a sub-chapter to each sub-system. The following guidelines should be followed when compiling an MML:

2.1 System and sub-system identification. If the Topic 5A1 is produced in hard copy form, then the title and chapter number of the first system and sub-system are to be identified at the top of the first page and each even numbered page. Thereafter, each system is to begin on a new even numbered page. When the details of a system and sub-system page finishes on an even numbered page and there is another system to follow, then the next odd numbered page is to read 'New system overleaf'. For Topics

5A1 that are produced in digital form, the title and chapter number of each system and sub-system are to be identified at the top of the each page.

2.2 Schedule Identification Number (SIN). Each maintenance item contained in the MML is allocated a seven digit SIN. The SIN is used to identify the item wherever it appears in the Topic 5 series. The SIN also forms the key reference for fault recording when used on the MOD Form 700 series documentation and is formed as follows:

2.2.1 The first two digits represent the Aircraft Maintenance Manual (AMM) Topic 1 chapter number.

2.2.2 The second two digits represent the AMM Topic 1 sub-chapter number. When a specific sub-chapter is designated for 'general application' the second two digits are '00'.

2.2.3 The last three digits represent the item number, which is allocated in numerical sequence.

The example SIN of '3231010' represents the tenth item of System 32 (Landing Gear), Sub-system 31 (Landing Gear Control).

2.3 Zone. The work area of the item to be maintained is identified by the associated zone number(s), as defined in the Topic 1 or introductory pages (if not published in the Topic 1). If a work area includes a complete series of sub-zones or sub-sub zones, then the higher level of zone identification is to be used; eg, the zone series of '211 through to 218' is expressed as 'Zone 210'. If the item description relates to the complete aircraft or an entire system, then the zone is identified by the number '000' (for legacy schedules this may be represented by the term 'GEN').

2.4 Item description. Item descriptions are compiled as follows:

2.4.1 Items are listed by system, sub-system and item number and allocated a SIN identifier. SINs are arranged in a logical sequence; eg, in ascending zone order, control systems from input to output and structures in numerical order of frames, ribs etc.

2.4.2 When an item is identified as a Structurally Significant Item (SSI) in accordance with ►MRP RA5720◄ the item description is to be immediately followed with the identifier '(SSI)'. The identifier should also include the SSI number.

2.4.3 Repetition of items occasioned by identical assemblies, eg left and right mainplanes, No. 1, 2, 3 and 4 engines, etc, is to be avoided by the use of multiple zones with a singular description, followed by the quantity in each zone. A separate SIN is to be used if the maintenance frequencies are not identical.

2.4.4 If there is more than one similar item in the same zone, then the item is to be labelled with the quantity, eg Bolt (4 off). If there is more than one item in several zones, then the quantity in each zone is to be annotated eg (1 each zone) or (1 in zone 310, 2 in zone 320, 4 in zone 330).

2.4.5 Items requiring qualifications for modification state or other reason have the qualification in brackets following the description and given a separate SIN.

2.5 Operations. Operations should be compiled as follows:

2.5.1 Exclude all operations merely to gain access; these are expanded on the associated work cards.

2.5.2 Operations should be written using common and recognized terminology (see Chapters 1-4 and 1-5).

2.5.3 Item replacement operations phased into a scheduled maintenance, known as in-phase operations, are to be indicated by the term 'Replace' followed by the reason in full eg 'Replace (Bay maintenance)' or 'Replace (Scrap)'. Scheduled item replacements that are out-of-phase with the maintenance cycle are to be indicated only by the cross reference 'See CRL'. All critical items (coded 'C' in the CRL) are treated as out-of-phase maintenance items.

2.5.4 When an item is removed for bay maintenance and the trade responsible for the bay maintenance is different from the trade responsible for its removal; then the trade responsible for bay maintenance is to be annotated in brackets following the operation eg:

'Oxygen mask. Replace (Bay maintenance) (SE). AF'

2.5.5 Where removal of an item is specified prior to an act of maintenance such as examination, testing, cleaning, etc the removal is to be included in brackets as part of the operation eg 'Clean (Removed)'.

2.5.6 Where an NDT examination is specified, technique details may be included in brackets as part of the operation eg. 'Examine (Technique XXX/EDD/6)' . Alternatively the task may be presented as 'Do the NDT Work Instruction XXX/EDD/6'.

2.6 Mark. This is used only if the aircraft or equipment item has various aircraft/equipment mark applicability. Where maintenance operations are applicable to all marks the column in each section of the schedule is to be left blank. If a maintenance activity is applicable to a particular mark then only that mark is to be annotated in the applicability column.

2.7 Code. Maintenance activities which are not suitable for self supervision are to be 'S' annotated, as required. If the operation is required to satisfy contingency maintenance then the code 'Cty' is annotated.

2.8 Trade. The predominant trade responsible for doing an operation is to be listed in the Trade column. If the operation relates to a zonal survey, then the trade is to be annotated 'Zonal'.

2.9 Frequency/maintenance group. The frequency of each operation is detailed showing only the highest frequency if the operation is repeated at lower frequencies, as they would be in a build-up type schedule. If a flexible primary is included in the suite of maintenance schedules, then the flexible groups to which the operations are assigned are also listed. Similarly, if an equalized maintenance schedule is adopted, then the equalized packages to which the operations are assigned are also to be listed.

2.10 Order of operations. When an item has more than one operation, the operations are inserted in decreasing order of frequency, followed by replacement operations where applicable.

2.11 Hidden maintenance. An operation that is out of phase, but is done as part of a maintenance procedure detailed in either the Topic 1 or the Topic 5A3, is to refer to that MP in the frequency column by name and number. The SIN for that item is then added to the MP immediately following the item. There is then no need for an entry in the Section 4 (SOOPMR).

2.12 Work cards (If applicable). The maintenance work cards on which an item's SIN appears are listed in this column, with a separate list of work cards for discrete Major maintenance.

2.13 Flex-op number (If applicable). Flex-op numbers are used in lieu of work card numbers for aircraft that operate using a flexible operations maintenance management system.

2.14 LITS SMT codes. Logistics Information Technology System (LITS) Scheduled Maintenance Task (SMT) codes are used in lieu of work card numbers for aircraft that operate using a LITS maintenance management system. LITS schedules do not necessarily require Sections 3 and 4 of the Topic 5A1 if the maintenance contained therein is included in the Section 1 and allocated appropriate SMT codes.

AMENDMENT

3 Amendments to the MML are to be compiled in accordance with Para 2 and the following guidelines:

3.1 Any amendment proposal to add a new item or operation, to delete an existing item or operation, or to change the frequency of an operation, must be subjected to RCM analysis and approved by the relevant platform PT before incorporation.

3.2 New items are to be inserted in the relevant system and sub-system, and in sequence, using the same logic as was used to compile the MML initially.

3.3 When all the maintenance operations for an item are deleted from the MML; the SIN, Zone(s) and item description are to remain as written and the operation column is to be annotated with 'Deleted by Amdt ...' or 'Maintenance transferred to SIN ..... by Amdt ...' as appropriate.

EXAMPLE MML PAGES

4 Examples of the MML pages are in shown in Figures 1 to 8.

MASTER MAINTENANCE LIST
AIRCRAFT NAME

AP Code-5A1
xx Edition
Sect 1

	Page No.	No. of Pages
Master maintenance list	1 - 210	210

E01234 ( )

Page 1/2

Figure 1 Example MML section 1 page 1/2 (number of pages)

Sub-system SAFETY LOCK - 31

MASTER MAINTENANCE LIST
AIRCRAFT NAME

System LANDING GEAR - 32

AP Code-5A1
xx Edition
Sect 1

SIN	ZONE	ITEM	OPERATION	MK	CODE	TRADE	FREQUENCY	WORK CARD	MAJOR CARD
3231001	110 120 130 140 511 611 712 722	Control cable assembly.	Examine as far as possible. Do the tension test (T.O. 1C-47-2).			Mech Mech	M MJ	378	92 92
3231002	110 140 511 611	Pulley assembly (2 off zone 110) (6 off zone 140) (4 off zones 511 and 611).	Examine as far as possible.			Mech	M	379 380	93
3231003	120	Landing gear raise interlock assembly.	Examine as far as possible.			Mech	MJ		94
3231004	221	Control handle, spring lever unit, pulley box and dog catch assembly.	Make sure that the handle is in the positive lock position with the locking clip engaged. Lubricate with oil OM-12 (NATO 0-142). Examine as far as possible. Do the check for adjustment (T.O. 1C-47-2).			Mech Mech Mech Mech	B/F A/F P M	 112 381 381	 94 94 94

E01234 ( )

Page No.

Figure 2 Example MML section 1 first and verso pages (hard copy build-up schedule)

AP Code-5A1
xx Edition
Sect 1

3231005	712 722	Mechanical safety lock attachment bracket link and arm assembly. (1 each zone).	Examine as far as possible.	Mech	P	110 111	98 100
			Lubricate with oil OM-12 (NATO 0-142).	Mech	P	110 111	98 100
3231006	711 712	Mechanical safety lock piston and cylinder assembly. (1 each zone).	Examine as far as possible.	Mech	P	110 111	99 101
			Lubricate (T.O. 1C-47-2).	Mech	P	110 111	99 101
			Do the check for adjustment (T.O. 1C-47-2).	Mech	M	382	99 101

E01234 ( )

Page No.

Figure 3 Example MML section 1 recto page (hard copy build-up schedule)

Sub-system NOSE GEAR - 20
EXTENSION AND RETRACTION - 30

MASTER MAINTENANCE LIST
AIRCRAFT NAME

System LANDING GEAR - 20

AP Code-5A1
xx Edition
Sect 1

SIN	ZONE	ITEM	OPERATION	MK	CODE	TRADE	FREQUENCY	EQUALIZED	WORK CARD	MAJOR CARD
2020020	710	Bridge casting and cross shaft assembly.	Examine as far as possible.			Mech	600 Hours	1 to 6 incl	981	
2020021	710	Stabilizer assembly.	Examine as far as possible.			Mech	600 Hours	1 to 6 incl	981	
2020022	710	Locking roller and locking cam.	Make sure that it is clean.			Mech	A/F			
2020023	710	Lock operating rod.	Examine as far as possible.			Mech	600 Hours	1 to 6 incl	982	
			Examine (Technique Nimrod -Rad/33).			NDT	600 Hours	1 to 6 incl	1528	
2020024	710	Upper drag stay.	Examine as far as possible.			Mech	600 Hours	1 to 6 incl	982	

E01234 ( )

Page No.

Figure 4 Example MML section 1 page (equalized schedule)

Sub-system GENERAL MAINTENANCE - 00 MASTER MAINTENANCE LIST AP Code-5A1

AIRCRAFT NAME Sect 1

System GENERAL MAINTENANCE - 07

SIN	ZONE	ITEM	OPERATION	MK	CODE	TRADE	FREQUENCY	GROUP	WORK CARD	MAJOR CARD
0700034	312	Airbrake bay.	Do a zonal survey.			Zonal	P	B, F	171	
0700035	313	Rudder PFCU bay.	Do a zonal survey (Panel 62 removed, all Mks) (Panels 136LH/RH removed, T Mks).			Zonal	P*	D	345	
0700036	321	Forward ventral fin.	Do a zonal survey (Forward ventral fin removed).			Zonal	P*	H	346	
0700037		Rear ventral fin.	Do a zonal survey (Antenna receiver cover removed).			Zonal	M		491	
0700038		Tailplane PFCU bay.	Do a zonal survey (Panels 66LH/RH, 67LH/RH and 70 removed).			Zonal	P	D, H	171	

E01234 ( ) Page No.

Figure 5 Example MML section 1 page (schedule with flexible primary maintenance)

Sub-system AIR INTAKES - 33

MASTER MAINTENANCE LIST
AIRCRAFT NAME

AP Code-5A1
Sect 1

System FUSELAGE - 15

SIN	ZONE	ITEM	OPERATION	EQUIPMENT TYPE	SMT CODE	MK	CODE	TRADE	FREQUENCY
1533001	27	Air intake assembly (LH).	See CRL.	TORNADO IDS	TNIDS-CRL 1533001			Mech	
1533002	28	Air intake assembly (RH).	See CRL.	TORNADO IDS	TNIDS-CRL 1533002			Mech	
1533003	273 283	Forward intake spraymat protective polyurethane tape (Post SM/TOR/10040).	Look for damage.					Mech	B/F T/R A/F PTR
1533004	274 284	Intake duct lower fasteners at frame X9110.	Examine as far as possible.					Mech	P

E01234 ( )

Page No.

Figure 6 Example MML section 1 page (LITS schedule)

Sub-system GENERAL - 00

MASTER MAINTENANCE LIST
AIRCRAFT NAME

AP Code-5A1
Sect 1

System GENERAL MAINTENANCE - 07

SIN	ZONE	ITEM	OPERATION	EQUIPMENT TYPE	SMT CODE	MK	CODE	TRADE	FREQUENCY
0700001	000	Aircraft.	Primary maintenance.	TORNADO IDS	TNIDS-P				206 Flying Hours 15 mins
			Primary Star maintenance.	TORNADO IDS	TNIDS-P*				412 Flying Hours 30 mins
			Minor maintenance.	TORNADO IDS	TNIDS-M				825 Flying Hours
			Minor Star maintenance.	TORNADO IDS	TNIDS-M*				1650 Flying Hours 2922 Days
			Major maintenance.	TORNADO IDS	TNIDS-MJ				3300 Flying Hours 5844 Days
			Flexible Primary maintenance. (Group A) (Group B) (Group C) (Group D)	TORNADO IDS	TNIDS-FLEXIBLE-P TNIDS-FLEXIBLE-P-GPA TNIDS-FLEXIBLE-P-GPB TNIDS-FLEXIBLE-P-GPC TNIDS-FLEXIBLE-P-GPD				206 Flying Hours 15 mins
			50 Hour Grouped maintenance.	TORNADO IDS	TNIDS-GOOP-50HR				50 Flying Hours (10 percent Positive attitude)
			50 Hour ECU Grouped maintenance.	ENG2840-002	RB199-GOOP-50HR				50 Flying Hours (Gulf ops only) (10 percent Positive attitude)
			64 Hour Grouped maintenance.	TORNADO IDS	TNIDS-GOOP-64HR				64 Flying Hours (10 percent Positive attitude)

E01234 ( )

Page No.

Figure 7 Example MML section 1 page (LITS schedule without MML sections 3 and 4)

Sub-system NO. 1 HYDRAULIC POWER SYSTEM - 11

MASTER MAINTENANCE LIST
AIRCRAFT NAME

AP Code-5A1
xx Edition
Sect 1

System HYDRAULIC POWER SYSTEM - 21

SIN	ZONE	ITEM	OPERATION	MK	CODE	TRADE	FREQUENCY	FORWARD OP NUMBER	DEPTH OP NUMBER
2111001	000	N0.1 hydraulic system.	Do the interlock functional test (AMM 21-11-00-501 Paras 2A, 2F and 2G).			Av	D1		502
2111002	155 310 460 470 490	No.1 system pressure and return rigid pipeline assembly.	Examine as far as possible.			M/Ac	D1		025
2111003	320	No.1 system yaw servo flexible hose (2 off).	Examine as far as possible (Tail pylon folded).			M	D1		025
2111004	320	No.1 system pressure and return rigid pipeline assembly.	Examine as far as possible.			M/Ac	200 Hours	262	
2111005	321	No.1 system spring bias flexible hose.	Examine as far as possible.			M/Ac	D1		025
			See CRL.			M/Ac			

E01234 ( )

Page No.

Figure 8 Example MML section 1 page (flex-ops schedule)

CHAPTER 3-3

AIRCRAFT TOPIC 5A1 SECTION 2 – COMPONENT REPLACEMENT LIST

CONTENTS

Para

1 General
2 Compilation
3 Amendment

Figure Page

1 Example CRL list of chapters page 3
2 Example CRL first and verso pages (hard copy schedule) 4
3 Example CRL recto page (hard copy schedule) 5
4 Example CRL page (using LITS without Topic 5A1 sections 3 and 4) 6
5 Example CRL page (using WRAM without Topic 5A1 sections 3 and 4) 7

GENERAL

1 The Component Replacement List (CRL) lists those components of an aircraft/equipment which it is mandatory to replace after a specified period of use. The removed items are either restored for further use as a result of bay maintenance or reconditioning, or discarded if the specified period of use is finite. The policy for the lifing of components is detailed in ►MAP-01 Chapter 5.3.1◄. The Section 2 includes item part/reference numbers and alternatives with the various frequencies applicable to each item listed. The Section 2 also details item equipment type and associated Schedule Maintenance Task (SMT) codes for those aircraft that operate using a LITS maintenance management system without an accompanying Section 3 and 4 in the Topic 5A1. Similarly, WRAM codes are detailed for those aircraft that operate using a WRAM maintenance management system. Example CRL pages are shown in Figures 1 to 5.

COMPILATION

2 The CRL is compiled using one chapter for each trade. The following guidelines are to be followed when compiling a CRL:

2.1. List of chapters. A List of Chapters page, which is un-numbered, precedes Page 1 of the CRL.

2.2. SIN. This is to be the SIN as allocated to the item in the MML and is to be inserted in sequential order.

2.3. Item identification. Items are identified by their MML nomenclature and relevant part number. If a part number is not available a reference number may be used. Lifed items of an assembly, which cannot be changed independent of that assembly, are to be listed in ascending order or life immediately below the assembly. Individual items within explosive cartridge sets are not to be listed separately.

2.4. Critical items. Items defined as critical in ►MAP-01 Chapter 5.3.1◄ are to be annotated with the letter 'C' in the column headed 'Code'. Such items are to be treated as out-of-phase maintenance items, even if the item's replacement periodicity aligns with a schedule maintenance periodicity of the aircraft.

2.5. Quantity. The total quantity of the item is to be annotated.

2.6. Frequency/reason. The change frequency is to be expressed in terms of hours, calendar time, shots fired etc as appropriate; followed by the reason, in code format, as detailed in ►MAP-01 Chapter 5.3.1◄.

2.7. Mark. This is to be used only if the item has various mark applicability.

2.8. Location. The location of the item is detailed by its zone number(s) eg '2 each zone 100 and 200'.

2.9. In phase. This indicates whether an item replacement is included in a scheduled maintenance package, ie in phase, in which case 'Yes' is annotated. If the replacement is out-of-phase, the column is annotated 'No' and the item is to appear in the Component Life Register (CLR), Section 3.

2.10. Equipment type and SMT codes. Information relating to equipment type and SMT codes are contained in the Section 2 for LITS style schedules without an accompanying Section 3 and 4 in the Topic 5A1.

AMENDMENT

3 Amendments to the CRL are to be compiled in accordance with Para 2 and the following additional guidelines:

3.1. The item, quantity or frequency/reason cannot be amended without authority of the relevant platform PT.

3.2. Any additions or deletions are to have authority from the relevant platform PT and any additions inserted in the relevant chapter in SIN order.

3.3. When an item is deleted, it is deleted in toto.

COMPONENT REPLACEMENT LIST
(MANDATORY CHANGES)
AIRCRAFT NAME

AP Code-5A1
xx Edition
Sect 2

LIST OF CHAPTERS

	Page No.	No. of Pages
Chapter 1 - Mechanical	1 - 81	81
Chapter 2 - Weapons	1 - 30	30
Chapter 3 - Avionics	1 - 31	31
Chapter 4 - Survival Equipment	1 - 2	2

E01234 ( )

Figure 1 Example CRL list of chapters page

MECHANICAL

COMPONENT REPLACEMENT LIST
(MANDATORY CHANGES)
AIRCRAFT NAME

AP Code-5A1
xx Edition
Sect 2

Compiled in accordance with ▶MAP-01 Chapter 5.3.1◀

SIN	ITEM	CRTICAL	QTY	FREQUENCY	REASON	MK	LOCATION	IN PHASE
0810001	Baggage pod 75A73008-1001.		1	183 Days	BM		Zones 611,612, 615, 616, 619	No
1510006	Nose cone lock bolt 75A304021-2007/2011.	C	4	6000 Hours	F		Zone 171	No
1510027	Frame 11 web angle (Pre Mod KT 599) 75A321212-2021 and 75A321212-202.	C	2	1600 Hours	F	All GR Mks	1 each zone 212/213 1 each zone 212/214	No
151028	Frame 11 web angle (Post Mod KT 599) 75R327161-2003 and 75R327161-2004.	C	2	43 FI	F	All GR Mks	1 each zone 212/213 1 each zone 212/214	No
1510038	Frame 12, channel bracket (Pre Mod KT 499) 75A320812-2257.	C	1	13 FI (FR 19)		All GR Mks	Zones 215 and 216	No

E01234 ( )

Chap 1 Page 1

Figure 2 Example CRL first and verso pages (hard copy schedule)

AP Code-5A1
xx Edition
Sect 2

2720002 (Contd)	Control cable NB-45-0895.	1	6000 Hours	Scrap	AL1 CC2	Zone General	No
	or						
	Control cable NBC-002-197.	1	6000 Hours	Scrap	CC2A	Zone General	No
2725002	Rudder trim bowden cable NB-45-2017.	1	6000 Hours	Scrap	CC2/2A	Zone General	No
	and						
	Rudder trim bowden cable NB-45-2019.	1	6000 Hours	Scrap		Zone General	No
2730002	Control cable NBC-002-B-079.	2	6000 Hours	Scrap		Zone 121	No
	and						
	Control cable NBC-002-080.	2	6000 Hours	Scrap		Zone 121	No
	Control cable NBC-002-B-079.	2			CC2/2A	Zone 121	No

E01234 ( )

Chap 1 Page 5

Figure 3 Example CRL recto page (hard copy schedule)

MECHANICAL

COMPONENT REPLACEMENT LIST
(MANDATORY CHANGES)
AIRCRAFT NAME

AP Code-5A1
xx Edition
Sect 2

CODE C = Critical failure mode
F = Fatigue life
R = Reconditioned life
BM = Bay Maintenance
E = Explosive life
T = Textile life
P = Provisional life
Scrap = Scrap life
SL = Shelf life)

Compiled in accordance with JAP100A-01 Chapter 5.3.1
SAMP - Sampling programme in progress

SIN	ITEM	EQUIPMENT TYPE	SMT CODE	CRITICAL	QTY	LOCATION	MK	FREQUENCY	CODE	IN PHASE
1922001	Wing sweep actuator C127401-1 (Post Mod 10273) or C127401-10 (Post Mod 10273 and 10872)	ACTUATOR1680-102	R-ACTUATOR-010	C	1	Zone 23		1200 factored hours (Usage factor = 1.0)	R	No
			F-ACTUATOR-003					8000 factored hours (Usage factor = 1.0)	F	
	including									
	Rubber snubber A126888	ACTUATOR1680-102	I-S-ACTUATOR-001	C	1	Zone 23		3652 Days from manufacture	Scrap	No
	and									
	Wing sweep actuator C127401-2 (Post Mod 10273) or C127401-20 (Post Mod 10273 and 10872)	ACTUATOR1680-102	R-ACTUATOR-010	C	1	Zone 23		1200 factored hours (Usage factor = 1.0)	R	No
			F-ACTUATOR-003					8000 factored hours (Usage factor = 1.0)	F	
	including									
	Rubber snubber A126888.	ACTUATOR1680-102	I-S-ACTUATOR-001	C	1	Zone 23		3652 Days from manufacture	Scrap	No

E01234 ( )

Chap 1 Page 21

Figure 4 Example CRL page (using LITS without Topic 5A1 sections 3 and 4)

AVIONICS | COMPONENT REPLACEMENT LIST (MANDATORY CHANGES) AIRCRAFT NAME | AP Code-5A1 Sect 2

CODE
C = Critical failure mode
F = Fatigue life
R = Reconditioned life
BM = Bay Maintenance
E = Explosive life
T = Textile life
P = Provisional life
Scrap = Scrap life
SL = Shelf life

Compiled in accordance with JAP100A-01 Chapter 5.3.1
SAMP - Sampling programme in progress

SIN	ITEM	CRITICAL	QTY	FREQUENCY	CODE	MK	LOCATION	IN PHASE	WRAM NO. LX/5A1N…
4520003	Fire extinguisher cartridge 3 pin (Red) 860-325 or 860-325-01 and	C	2	104 Weeks (Installed) 156 Weeks from date of manufacture	E		Zone 155	No	4520003/P3 and 4520003/S3
	Fire extinguisher cartridge 3 pin (Green) 12-12-11638 or 12-12-11638-5	C	2	104 Weeks (Installed) 156 Weeks from date of manufacture	E		Zone 155	No	4520003/P6 and 4520003/S6

E01234 ( ) | Chap 2 Page 1

Figure 5 Example CRL page (using WRAM without Topic 5A1 sections 3 and 4)

CHAPTER 3-4

AIRCRAFT TOPIC 5A1 SECTION 3 – COMPONENT LIFE REGISTER

CONTENTS

Para

1 General
3 Compilation
4 Amendment

Figure Page

1 Example CLR list of chapters page 3
2 Example CLR page 4
3 Example CLR grouped replacements annex page 5
4 Example CLR page (using LITS with Topic 5A1 sections 3 and 4) 6

GENERAL

1 The Topic 5A1 Section 3, Component Life Register (CLR), is produced in single sided format and is designed to assist in the control of out-of-phase item replacements. The CLR is duplicated by users for use as control documents within each aircraft MOD Form 700. Example pages from a CLR are shown in Figures 1 to 4.

2 Section 3 of the Topic 5A1 may not be required in the following circumstances:

2.1 When a series of Out-of-Phase work cards exists as a discrete section in the Topic 5C (Army only).

2.2 When an aircraft is operated using a Flexible Operations (Flex Ops) maintenance regime (RN only).

2.3 When an aircraft's scheduled maintenance is wholly managed by an electronic maintenance management system such as LITS or Work Recording and Asset Management (WRAM).

COMPILATION

3 Each life parameter, eg hours, calendar, shots fired etc, is allocated a chapter as required, as shown in Figure 1. Each item is given a CLR number, from one upwards throughout the CLR. The following guidelines are to be followed when compiling the CLR:

3.1 Items are to be arranged in ascending life order, except where alternative items are listed, and are to follow grouped replacement codes (see 3.13 below).

3.2 CLR numbers are to be in ascending order within a chapter.

3.3 Two or more identical items may be treated either as separate items or as sets. If controlled as separate items they are to be given separate CLR numbers and the position of each item clearly defined in the location column. If controlled in sets, each set is to be treated as one item.

3.4 Item changes that have more than one life parameter are to be included in each relevant chapter. The cross references to the other chapters and CLR numbers are entered in the 'Remarks' column.

3.5 Items having a life independent from the main assembly to which they are attached and which can be changed independently from them are to be listed below the main item in ascending life order.

3.6 Alternative items are only listed when they have different lives.

3.7 Where a CRL lists an item; eg 'Main rotor head', with a list of items that are part of that main item and would be changed with it; the entry in the CLR is to read 'Main rotor head. (Complete)'.

3.8 The 'Part No.' and 'Location' columns are only to be used when the identity or location of an item would otherwise be in doubt.

3.9 The 'SMT' column will supersede the 'Part No' column when required by the platform PT (LITS style aircraft schedules).

3.10 The 'Equipment Type' (LITS style aircraft schedules) is to be listed below the item description when required by the platform PT.

3.11 Where a Maintenance Procedure (MP) exists for an item replacement, cross reference to the MP number is to be entered in the 'Remarks' column.

3.12 When an operation is not suitable for self supervision, the code 'S' is to appear in the 'Code' column.

3.13 When a number of item/operations exist at the same frequency, they may be grouped. This 'Grouped replacement' is to be presented in an annex to the relevant chapter. The grouped items are entered in the relevant life parameter chapter as detailed above and the remarks column annotated 'Not in use See Code xx'. An example of a grouped replacement annex is shown in Figure 3.

3.14 Grouped replacement codes are to be allocated at the beginning of the relevant chapter.

AMENDMENT

4 Amendments to the CLR are to be compiled in accordance with Para 2 and the following additional guidelines:

4.1 New items are to be added at the end of the appropriate chapter and allocated the next CLR number in sequence from all the chapters.

4.2 Where a change of lifing is expressed in the existing units of measurement, then the item remains within the current chapter. If the life parameter is changed (eg, from Flying Hours to Calendar cycles), then the entry is to be deleted, then transferred to the appropriate chapter and allocated a new CLR number.

4.3 When an item is deleted the item column is to be annotated 'Deleted by Amdt ... '. That CLR number will not then be re-allocated until such time as the CLR is completely rewritten.

4.4 Where an amendment to an item cannot be contained within the number of lines already occupied by that item; reference to it is to be deleted and re-entered, with a new CLR number, at the end of the chapter.

4.5 Rewriting the CLR is to be restricted to schedule revisions or when considered necessary by all users and as approved by the sponsor.

COMPONENT LIFE REGISTER
AIRCRAFT NAME

AP Code-5A1
xx Edition
Sect 3

LIST OF CHAPTERS

	Page No.	No. of Pages
Chapter 1 - Flying hours	1 - 40	40
Chapter 2 - Calendar	1 - 16	16
- Annex A	1 - 4	4
Chapter 3 - AP 100E 01 controlled items	1 - 6	6
Chapter 4 - Factored hours	1 - 4	4
Chapter 5 - Landings	1 - 2	2
Chapter 6 - Rounds fired	1 - 2	2
Chapter 7 - ERU firings	1 - 4	4
Chapter 8 - Flight carriage hours	1 - 2	2
Chapter 9 - APU starts	1 - 2	2
Chapter 10 - Tape running hours	1 - 4	4
Chapter 11 - Missile firing	1 - 2	2
Chapter 12 - Miscellaneous	1 - 2	2

E01234 ( )

Figure 1 Example CLR list of chapters page

FLYING HOURS

COMPONENT LIFE REGISTER
AIRCRAFT NAME

AP Code-5A1
xx Edition
Sect 3

CODE C = Critical failure mode
F = Fatigue life
R = Reconditioned life
BM = Bay Maintenance
E = Explosive life
T = Textile life
P = Provisional life
Scrap = Scrap life
SL = Shelf life)
) Compiled in accordance with JAP100A-01 Chapter 5.3.1
) SAMP - Sampling programme in progress

CLR NO.	SIN	ITEM	PART NO.	MK	LOCATION	CODE	FREQUENCY		REMARKKS	CLR NO.
1	3510002	Oxygen mask and hose assembly.	358-1501		Zone 210		230	BM	See CLR Code 9	1
2	3510002	Oxygen mask and hose assembly.	358-1501		Zone 222		230	BM	See CLR Code 10	2
3	3510002	Oxygen mask and hose assembly.	358-1501		Zone 223		230	BM	See CLR Code 11	3
4	3510002	Oxygen mask and hose assembly.	358-1501		Zone 235		230	BM	See CLR Code 12	4
5	3530001	Fire fighters oxygen mask and hose assembly.	651-475-3		Zone 135		230	BM	See CLR Code 13	5
6	3530001	Fire fighters oxygen mask and hose assembly.	651-475-3		Zone 162		230	BM	See CLR Code 14	6
7	3530001	Fire fighters oxygen mask and hose assembly.	651-475-3		Zone 212		230	BM	See CLR Code 15	7
8	3530001	Fire fighters oxygen mask and hose assembly.	651-475-3		Zone 222		230	BM	See CLR Code 16	8

E01234 ( )

Chap 1 Page 1/2

Figure 2 Example CLR page

CALENDAR | COMPONENT LIFE REGISTER | AP Code-5A1
AIRCRAFT NAME | xx Edition
Sect 3

365 Day Grouped Replacements - CLR 311

CODE C = Critical failure mode
F = Fatigue life
R = Reconditioned life
BM = Bay Maintenance
E = Explosive life
T = Textile life
P = Provisional life
Scrap = Scrap life
SL = Shelf life)

Compiled in accordance with JAP100A-01 Chapter 5.3.1
SAMP - Sampling programme in progress

SIN	ITEM	PART NO.	MK	LOCATION	CRITICAL	FREQUENCY	REASON	REMARKS
2560003	Escape slide (Roof mounted).			Forward main entrance door - 42		CLR 35	BM	MP 25-60-5
2560003	Escape slide (Roof mounted).			Forward main entrance door - 43		CLR 36	BM	MP 25-60-5
2560003	Escape slide (Roof mounted).			Forward main entrance door - 46		CLR 37	BM	MP 25-60-5
2560007	Escape slide (Roof mounted).			Forward main entrance door - 45		CLR 38	BM	MP 25-60-5
2510003	Safety harness Mk 38 (1st Pilot).			Flight compartment (Pilots station) - 11		CLR 265	BM	
2510003	Safety harness Mk 39 (2nd Pilot).			Flight compartment (Pilots station) - 11		CLR 266	BM	
2510003	Safety harness Mk 39 (Engineer).			Flight compartment (Eng and Nav stations) - 12		CLR 267	BM	
2510003	Safety harness Mk 38 (Navigator).			Flight compartment (Eng and Nav stations) - 12		CLR 268	BM	
2510003	Safety harness Mk 38 (Supernumerary).			Flight compartment (Eng and Nav stations) - 12		CLR 269	BM	

E01234 ( ) Chap 2 Annex B Page 5/6

Figure 3 Example CLR grouped replacements annex page

FLYING HOURS | COMPONENT LIFE REGISTER | AP Code-5A1
AIRCRAFT NAME | xx Edition
Sect 3

CODE C = Critical failure mode
F = Fatigue life
R = Reconditioned life
BM = Bay Maintenance
E = Explosive life
T = Textile life
P = Provisional life
Scrap = Scrap life
SL = Shelf life

Compiled in accordance with JAP100A-01 Chapter 5.3.1
SAMP - Sampling programme in progress

CLR NO.	SIN	ITEM/EQUIPMENT TYPE	SMT CODE	MK	LOCATION	CODE	FREQUENCY	REMARKKS	CLR NO.
7	8220001	Ejector Release Unit (ERU) ERU1680-002.	B-ERU-010		Zone 611 (Station 3)		250 BM	See CLR Codes 167 and 370	7
8	8220001	Ejector Release Unit (ERU) ERU1680-002.	B-ERU-010		Zone 612 (Station 5)		250 BM	See CLR Codes 168 and 371	8
9	8220001	Ejector Release Unit (ERU) ERU1680-002.	B-ERU-010		Zone 615 (Station 2)		250 BM	See CLR Codes 169 and 372	9
10	8220001	Ejector Release Unit (ERU) ERU1680-002.	B-ERU-010		Zone 616 (Station 6)		250 BM	See CLR Codes 170 and 373	10
11	8220001	Ejector Release Unit (ERU) ERU1680-002.	B-ERU-010		Zone 617 (Station 1)		250 BM	See CLR Codes 171 and 374	11
12	8220001	Ejector Release Unit (ERU) ERU1680-002.	B-ERU-010		Zone 618 (Station 7)		250 BM	See CLR Codes 172 and 375	12
13	8220001	Ejector Release Unit (ERU) ERU1680-002.	B-ERU-010		Zone 619 (Station 4)		250 BM	See CLR Codes 173 and 376	13

E01234 ( ) | Chap 1 Page 3/4

Figure 4 Example CLR page (using LITS with Topic 5A1 sections 3 and 4)

CHAPTER 3-5

AIRCRAFT TOPIC 5A1 SECTION 4 – SCHEDULED AND OUT-OF-PHASE MAINTENANCE REGISTER

CONTENTS

Para

1 General
3 Compilation
4 Amendment

Figure Page

1 Example SOOPMR list of chapters page 3
2 Example SOOPMR page 4
3 Example SOOPMR grouped maintenance annex 5

GENERAL

1 The Topic 5A1 Section 4, Scheduled and Out-of-Phase Maintenance Register (SOOPMR), is produced in single sided format and is designed to assist in the control of scheduled maintenance frequencies and out-of-phase maintenance operations. The SOOPMR is duplicated by users as control documents within each aircraft MOD Form 700. Example SOOPMR pages are shown in Figures 1, 2 and 3.

2 Section 4 of the Topic 5A1 may not be required in the following circumstances:

1.1 When a series of Out-of-Phase work cards exists as a discrete section in the Topic 5C (Army only).

1.2 When an aircraft is operated using a Flexible Operations (Flex Ops) maintenance regime (Navy only).

1.3 When an aircraft's scheduled maintenance is wholly managed by an electronic maintenance management system such as Logistics Information Technology Strategy (LITS) or Work Recording and Asset Management (WRAM).

COMPILATION

3 Each life parameter, eg hours, calendar, shots fired, etc, is allocated a chapter and each item is given its own OOP code. The following guidelines are to be followed when compiling the SOOPMR:

1.4 The OOP code is formed with a prefix letter denoting each chapter followed by numbers in ascending order within each chapter, eg 'Chapter 1, Flying hours, OOP Code A1, A2, etc; Chapter 2, Calendar, OOP Code B1, B2' etc.

1.5 Scheduled maintenance packages, Primary, Minor, Major, etc, are to be included as the first items in the relevant chapters 1 and 2 (Flying hours and calendar time).

1.6 Items which do not have a unit based frequency and cannot be conveniently controlled using a forecast log are to be allocated to the miscellaneous chapter. The 'Miscellaneous' chapter is to be the final chapter of the SOOPMR.

1.7 When an operation is not suitable for self supervision, the code 'S' is to appear in the 'Code' column.

1.8 Items governed by more than one life parameter are to be included in each relevant chapter and cross-referred to the alternative chapter and OOP Code number.

1.9 When an operation is covered by an MP, cross reference to that MP is to be made in the 'Operations' column.

1.10 Item nomenclature is to be the same as in the MML including any qualifications in brackets and quantity details.

1.11 When a number of item/operations exist at the same frequency they may be grouped. This 'Grouped maintenance' is to be presented in an annex to the relevant chapter. The grouped items are entered in the relevant life parameter chapter as detailed above and the remarks column annotated 'Not in use, See Code xx'. An example of a grouped maintenance annex is shown in Figure 3.

1.12 Grouped maintenance codes are to be allocated at the beginning of the relevant chapter, following the scheduled maintenance codes.

AMENDMENT

4 Amendments to the SOOPMR are to be compiled in accordance with Para 2 and the following additional guidelines:

1.13 New items are to be added at the end of the appropriate chapter and allocated the next code in sequence.

1.14 When an item is deleted the item column is to be annotated 'Deleted by Amdt ...'. That OOP code number will not then be re-allocated until such time as the SOOPMR is completely rewritten.

1.15 Where an amendment to an item cannot be contained within the space already occupied by that item; the original entry is to be deleted and the item re-entered, with its amendment, at the end of the chapter and with a new OOP code.

SCHEDULED AND OUT OF PHASE MAINTENANCE REGISTER
AIRCRAFT NAME

AP Code-5A1
xx Edition
Sect 4

LIST OF CHAPTERS

	Page No.	No. of Pages
Chapter 1 - Flying hours	1 - 8	4
- Annex A	1 - 4	2
Chapter 2 - Calendar	1 - 2	1
Chapter 3 - Miscellaneous	1 - 2	1

E01234 ( )

Figure 1 Example SOOPMR list of chapters page

FLYING HOURS | SCHEDULED AND OUT OF PHASE MAINTENANCE REGISTER | AP Code-5A1
AIRCRAFT NAME | xx Edition
Sect 4

00P CODE	SIN	MK	TRADE	ITEM	OPERATION	CODE	FREQUENCY	REMARKKS	OOP CODE
A1				Primary.			150	Not applicable when OOP Code A5 is in use	A1
A2				Primary Star.			300	Not applicable when OOP Code A5 is in use	A2
A3				Primary Two Star.			600	Not applicable when OOP Code A5 is in use	A3
A4				Minor.			1200	Not applicable when OOP Code A5 is in use	A4
A5				Maintenance Groups A-R.			Refer to introduction	Not applicable when OOP Codes A1, A2, A3 and A4 are in use	A5
A6				75 Hour Grouped Maintenance.			75	Not applicable when OOP Codes A1, A2, A3 and A4 are in use	A6
A7	0000002		AF	Aircraft.	Do the water/detergent mix wash (AMM).		75 1500	Not in use See Code A6 In-phase with Minor	A7
A8	0600017		AF	External surface area of horizontal stabilizer.	Examine.		75	Not in use See Code A6	A8
A9	2730007		AF	Elevator push-pull drive rod.	Examine as far as possible (Tailcone and panels F19 and F20 removed),		75	Not in use See Code A6	A9

E01234 ( ) | Chap 1 Page 1/2

Figure 2 Example SOOPMR page

FLYING HOURS

SCHEDULED AND OUT OF PHASE MAINTENANCE REGISTER
AIRCRAFT NAME

75 HOUR GROUPED MAINTENANCE

AP Code-5A1
xx Edition
Sect 4

SIN	MK	TRADE	ITEM	OPERATION	CODE	FREQUENCY	REMARKKS
0000002		AF	Aircraft.	Do the water/detergent mix wash (AMM).		A7	Zone 000
0600017		AF	External surface area of horizontal stabilizer.	Examine.		A8	Zones 331 and 341
2730007		AF	Elevator push-pull drive rod.	Examine as far as possible (Tailcone and access panels F19 and F20 removed).		A9	Zones 261 and 271
2732001		AF	Elevators trim control assembly.	Do the backlash check (AMM).		A10	Zone 000
2732007		AF	Elevator trim rear sprocket and chain assembly.	(i) Examine as far as possible (Panels F22 and F24 removed). (ii) Lubricate (AMM).		A11	Zone 261 and 271
2732008		AF	Elevator trim screwjack assembly.	(i) Examine as far as possible (Tailcone removed). (ii) Lubricate (AMM).		A12	Zone 271
2732009		AF	Elevator trim tab drive rod.	(i) Examine as far as possible (Tailcone removed). (ii) Lubricate (AMM).		A13	Zone 271 and 351

E01234 ( )

Chap 1 Annex A Page 1/2

Figure 3 Example SOOPMR grouped maintenance annex

CHAPTER 3-6

AIRCRAFT TOPIC 5A1 SECTION 5 – COMPONENT FATIGUE FACTOR TABLES

CONTENTS

Para

1 General
2 Compilation
3 Amendment

Figure Page

1 Example section 5 – contents page 2
2 Example section 5 – instructions to users page 3
3 Example section 5 – CFFT page 4

GENERAL

1 The Topic 5A1 Section 5, Component Fatigue Factor Tables (CFFT), lists the components within a system/sub-system that are subject to penalty fatigue factoring related to the mark or role of the aircraft. Part Number, Maximum Fatigue Life (NORM) and Penalty Factoring Number (PFN) applicable to the mark or role are annotated against each component. Component Fatigue Life Usage is calculated by multiplying the component installed hours by the PFN.

COMPILATION

2 The CFFT pages are compiled by system/sub-system in accordance with the examples shown in Figures 1, 2 and 3. Each table starts on a front page.

AMENDMENT

3 Amendments to a CFFT are to be compiled in accordance with Para 2 and the following additional guidelines:

3.1 Any new item is to be subjected to RCM analysis and approved by the relevant platform PT before incorporation. Items are to be inserted sequentially in the relevant system/sub-system CFFT.

3.2 Amendment proposals to delete, or amend CFFT entries are to be subjected to RCM analysis and approved by the relevant platform PT before incorporation.

COMPONENT FATIGUE FACTOR TABLES
AIRCRAFT NAME

AP Code-5A1
xx Edition
Sect 5

CONTENTS

		Page No.	No. of Pages
Instructions to users		1/2	2
Table 1	System 50 - Main rotor head and blades	3 - 6	4
Table 2	System 51 - Main rotor head drive	7 - 11/12	6
Table 3	System 52 - Tail rotor drive	13 - 16	4
Table 4	System 53 - Tail rotor hub and blades	17/18	2

E01234 ( )

Figure 1 Example MML section 5 – contents page

COMPONENT FATIGUE FACTOR TABLES
AIRCRAFT NAME

AP Code-5A1
xx Edition
Sect 5

INSTRUCTIONS TO USERS

TOPIC 5A1 SECTION 5 - COMPONENT FATIGUE FACTOR TABLES (CFFT)

Each CFFT lists the components within a system that are subject to penalty fatigue factoring related to the mark or role of the aircraft. Part Number, Maximum Fatigue Life (NORM) and Penalty Factoring Number (PFN) applicable to the mark or role are annotated against each component. Component Fatigue Life Usage is to be calculated by multiplying the component installed hours by the PFN.

Example: A replacement blade sleeve assembly (Part of system 50 - Main Rotor Head and Blades) is installed on a Mk 3 aircraft at 826 aircraft hours and is removed at 1526 aircraft hours.

Therefore: Hours used = 1526 minus 826 = 700 hours.
From CFFT Table 1 item 13 PFN = 1.16

Therefore: Fatigue life used = 700 x 1.16 = 812
From CFFT Table 1 item 13 Maximum Fatigue Life (Normal) = 6172 hours
Remaining Fatigue Life = 6172 minus 812 = 5360

NOTE: Section 2 lifing policy reflects that published in AWHL Brochure B3219 (Green Book) Edition 1 Jan 93 Amdt No.20

E01234 ( )

Page 1/2

Figure 2 Example MML section 5 - instructions to users page

COMPONENT FATIGUE FACTOR TABLES

AIRCRAFT NAME

AP Code-5A1

xx Edition

Sect 5

TABLE 1

SYSTEM 50 - MAIN ROTOR HEAD AND BLADES

ITEM NO.	WRAM No. (LX/5A1N…)	COMPONENT IDENTIFICATION	PART NUMBER	MAXIMUM FATIGUE LIFE (NORMAL)	PENALTY FACTORING NUMBER			
					MK 3	MK 7	MK 8	MK 9
(a)	(b)	(c)	(d)	(e)	(f)	(g)	(h)	(j)
1	5021001/1	Nut Spider Assembly	WG0069-0019-101	7000	1.30	1.35	1.00	1.35
2	5021001/2	Sleeve Splined Mod 0284	WG0069-0040-101 WG1369-0107-101	7000 7000	1.02 1.02	2.59 2.59	2.59 2.59	2.59 2.59
3	5021001/3	Bearing Assembly Mod 0805	WG0069-0046-047 WG0069-0046-049	7000 7000	1.00 1.00	2.59 2.59	2.59 2.59	2.59 2.59
4	5021001/4	Gimbal Ring Sub-Assembly Mod 0805	WG0069-0047-049 WG0069-0047-051	7000 7000	1.00 1.00	1.35 1.35	1.35 1.35	1.35 1.35
5	5021001/5	Bearing Housing Sub-Assembly Mod 0284 Mod 0284	WG0069-0053-043 WG1369-0112-041 WG1369-0112-043	7000 7000 7000	1.00 1.00 1.00	1.00 1.00 1.00	1.00 1.00 1.00	1.01 1.01 1.01
6	5021001/6	Support Ring Assembly Mod 0284	WG0069-0158-043 WG1369-0109-041	5280 5280	1.00 1.00	1.89 1.89	2.11 2.11	2.11 2.11
7	5021001/7	Splined Ring	WG0069-0165-101	5280	1.00	1.70	1.30	1.96
8	5021001/9	Spider Assembly Cover	WG1369-0020-003	7000	1.00	1.00	1.00	1.01

E01234 ( )

Page 3

Figure 3 Example MML section 5 - CFFT page

CHAPTER 4-0

AIR LAUNCHED GUIDED WEAPON TOPIC 5A1 MASTER MAINTENANCE SCHEDULE - GENERAL

CONTENTS

Para

1 Introduction

Table Page

1 Sub-chapters related to the sections of an ALGW MMS 1

INTRODUCTION

1 The Master Maintenance Schedule (MMS) is the master control document for all maintenance schedules within a series. It is used to make sure that all scheduled and out-of-phase maintenance operations necessary to maintain an Air Launched Guided Weapon (ALGW) are done as required. The content of the MMS is authorized by the relevant weapons and aircraft Project Team (PT).

2 The ALGW MMS is divided into two sections, each of which is described in an associated sub-chapter of this publication as shown in Table 1.

TABLE 1 SUB-CHAPTERS RELATED TO THE SECTIONS OF AN ALGW MMS

Sub-chapter	MMS Section
Chap 4-1	Preliminary pages
Chap 4-2	Section 1 - Master Maintenance List

CHAPTER 4-1

AIR LAUNCHED GUIDED WEAPON TOPIC 5A1 MMS - PRELIMINARY PAGES

CONTENTS

Para

1 Introduction
2 Details of ALGW topic 5A1 preliminary pages
3 Front cover
4 Amendment record
5 Record of Advance Information Leaflets (AIL) and Service Amendment Leaflets (SAL)
6 List of contents
7 Introduction
8 List of servicing instructions incorporated into the schedule
9 List of aircraft components/sub-assemblies requiring record/log cards

Figure Page

1 Example of an ALGW MMS amendment record (recto) 3
2 Example of an ALGW MMS amendment record (verso) 4
3 Example of an ALGW MMS record of AILs and SALs (recto) 5
4 Example of an ALGW MMS record of AILs and SALs (verso) 6
5 Example of an ALGW MMS contents page 7
6 Example 1 of an ALGW MMS introduction page 8
7 Example 2 of an ALGW MMS introduction page 9
8 Example 3 of an ALGW MMS introduction page 10
9 Example 4 of an ALGW MMS introduction page 11
10 Example 5 of an ALGW MMS introduction page 12
11 Example 6 of an ALGW MMS introduction page 13
12 Example of an ALGW MMS list of incorporated servicing instructions page 14
13 Example of an ALGW list of components or sub-assemblies requiring record/log cards page 15

INTRODUCTION

1 As explained in Chapter 2, the preliminary pages of a maintenance schedules publication constitute that material which precedes the main contents of the publication. The purpose of this chapter is to provide a more detailed explanation of the preliminary pages that are specific to an ALGW Topic 5A1 Master Maintenance Schedule (MMS).

DETAILS OF ALGW TOPIC 5A1 PRELIMINARY PAGES

2 The following paragraphs provide details of the ALGW MMS preliminary pages in the order that they are presented in the publication.

Front cover

3 The front cover forms the title page of the MMS as explained in Chapter 2. Examples of front covers are presented in Chapter 2-0, Figures 1 to 3.

Amendment record

4 In addition to recording the incorporation of amendments to the MMS, the Amendment Record contains additional blocks that are used to record the details of associated amendments incorporated in dependent topics and any associated electronic maintenance management database, such as LITS or WRAM. An example MMS Amendment Record is shown in Figures 1 and 2.

Record of Advance Information Leaflets (AIL) and Service Amendment Leaflets (SAL)

5 As explained in Chapter 2, the Record of AILs and SALs is used to record the incorporation of AILs and SALs when they are superseded by formal amendments. An example of an MMS Record of AILs and SALs is shown in Figures 3 and 4.

List of contents

6 An example of an MMS List of Contents page is shown in Figure 5.

Introduction

7 In addition to detailing the periodicity and type of maintenance to be used, the introduction explains the construction and use of the MMS and its dependent topics, as applicable. Examples of MMS Introduction pages are shown in Figures 6 to 11.

List of servicing instructions incorporated into the schedule

8 All Servicing Instructions (SI) incorporated into the schedule are detailed in a separate list. An example of an MMS List of Servicing Instructions Incorporated in the Schedule page is shown in Figure 12.

List of aircraft components/sub-assemblies requiring record/log cards

9 All components (►MAP-01/02 series◄) which require record/log cards are listed on this page in SIN order. Part numbers are to be used only when the requirement is selective (eg modification state) or the component/sub-assembly is not subject to scheduled maintenance. An example of an MMS List of Components/sub-assemblies Requiring Record/ log Cards page is shown in Figure 13.

CLASSIFICATION
MASTER MAINTENANCE SCHEDULE
WEAPON NAME

AP Code-5A1

AMENDMENT RECORD

Amdt No.	Date of issue	Associated Topic Amendments											Amendment Incorporated	
													Signature	Date
1														
2														
3														
4														
5														
6														
7														
8														
9														
10														
11														
12														
13														
14														
15														
16														

E01234 ( ) CLASSIFICATION Page (iii)

Figure 1 Example of an ALGW MMS amendment record (recto)

CLASSIFICATION

AP Code-5A1

Amdt No.	Date of issue	Associated Topic Amendments											Amendment Incorporated	
													Signature	Date
17														
18														
19														
20														
21														
22														
23														
24														
25														
26														
27														
28														
29														
30														
31														
32														

E01234 ( ) CLASSIFICATION Page (iv)

Figure 2 Example of an ALGW MMS amendment record (verso)

CLASSIFICATION
MASTER MAINTENANCE SCHEDULE
WEAPON NAME

AP Code-5A1

RECORD OF ADVANCE INFORMATION LEAFLETS (AIL)
AND SERVICE AMENDMENT LEAFLETS (SAL)

AIL/SAL Ser No.	Brief Details	Signal SIC and DTG	Deleted by Amdt/AIL

E01234 ( ) CLASSIFICATION Page (V)

Figure 3 Example of an ALGW MMS record of AILs (recto)

CLASSIFICATION

AP Code-5A1

AIL/SAL Ser No.	Brief Details	Signal SIC and DTG	Deleted by Amdt/AIL

E01234 ( ) CLASSIFICATION Page (Vi)

Figure 4 Example of an ALGW MMS record of AILs (verso)

CLASSIFICATION
MASTER MAINTENANCE SCHEDULE
WEAPON NAME

AP Code-5A1

CONTENTS

Preliminary Material — Page

Title page ..... (i)/(ii)
Amendment record ..... (iii) and (iv)
Record of Advance Information Leaflet (AIL) signals ..... (v) and (vi)
Contents (This page) ..... (vii)/(viii)
Introduction ..... (ix) to (xiv)
List of servicing instructions incorporated into this schedule ..... (xv)/(xvi)
List of components or sub-assemblies requiring record/log cards ..... (xvii)/(xviii)

Section

1 Master Maintenance List

E01234 ( ) CLASSIFICATION Page (vii)/(viii)

Figure 5 Example of an ALGW MMS contents page

CLASSIFICATION
MASTER MAINTENANCE SCHEDULE AP Code-5A1
WEAPON NAME

INTRODUCTION

CONTENTS

Para

Introduction

1 Maintenance system
3 Periodicity
4 Usage in Extreme Environments
5 Missile Exposure Life
6 Latitudes
General
7 Trade Qualifications
8 Abbreviations
9 Training
10 Definitions
Amendments
11 Schedule amendments

E01234 ( ) CLASSIFICATION Page (ix)

Figure 6 Example 1 of an ALGW MMS introduction page

CLASSIFICATION

AP Code-5A1

INTRODUCTION

Maintenance System

1 This schedule details the minimum maintenance for the (Weapon Name) when not fitted to an aircraft. Maintenance when fitted to aircraft is to be reflected in the relevant aircraft maintenance schedule.

2 This maintenance schedule is a complete list of periodic and out-of-phase maintenance of the (Weapon Name) equipment. It lists components, which are to be replaced for fatigue life limitations, reconditioning, bay maintenance etc, and specifies the appropriate trades and periodicities. Reference to the appropriate publications for maintenance is also made.

PERIODICITY

3 The schedule is designed for calendar and air carriage periodicities as shown in the following tables. Detailed information can be found in Section 1:

TABLE 1 CALENDAR BASED MAINTENANCE ACTIVITIES

Item	OOP	XX Days	XX Days (X Mths)	XXX Days	XXX Days	XXX Days	XXXX Days (X Yrs)	XXXX Days (XX Yrs)	XXXX Days (XX yrs)
Operational Missile (OM)	X	X	X	X	X	X	X	X	X
Training Missile (TM)	X								
Launcher	X		X		X				X
All Up Round Container (AURC)			X						
Services Weapon Test Set (SWTS)	X								
(Weapon Name) Test Set (WNTS)	X								

E01234 ( ) CLASSIFICATION Page (x)

Figure 7 Example 2 of an ALGW MMS introduction page

CLASSIFICATION
MASTER MAINTENANCE SCHEDULE
WEAPON NAME

AP Code-5A1

INTRODUCTION

PERIODICITY (Contd)

TABLE 2 FATIGUE LIVES

Item	Deployments	Air Carriage	Loads/ Uploads	Launches	Over Temp
Operational Missile (OM)	X	X			X
Training Missile (TM)		X			
Launcher		X	X	X	
Wedge Adapters		X			
Mace Lugs		X			

TABLE 2 TRANSPORTATION LIVES

Item	Internal AT ac	Underslung Loads	Road/ Rail	RFA or STUFT
Operational Missile (OM)	X	X	X	X

E01234 ( ) CLASSIFICATION Page (xi)

Figure 8 Example 3 of an ALGW MMS introduction page

CLASSIFICATION

AP Code-5A1

Usage in Extreme Environments

4 It is essential that the OM is protected from adverse environmental conditions as much as possible and is to remain in its AURC for as long as is practicable. In or out of the AURC the OM should be protected from direct sunlight and ventilated.

Missile Exposure Life

5 The life constraints detailed in the following chapters applies equally to climatic conditions A1, A2, A3, B1, B2, C0 and M1 (JSMCR Climatic Categories).

Latitudes

6 Bay maintenance life may be extended iaw ▶ MAP-01 Chap 5.3 ◀. Further extensions will only be granted in exceptional circumstances. Further extensions are to be requested via command HQ to the designated PT. No extensions to explosive or fabric finite lives are permitted without prior authorization by the designated PT.

GENERAL

Trade Qualifications

7 Where civilians are employed they are to have grade, skills and experience equivalent to the service rank and trade specifications.

Abbreviations

8

OM	Operational Missile
TM	Training Missile
AURC	All Up Round Container
SWTS	Services Weapon Test Set
WNTS	(Weapon Name) Test Set
GSE	Ground Support Equipment
STTE	Special-to-Type Test Equipment
TBD	To Be Detailed
AT	Air Transport
RFA	Royal Fleet Auxiliary
ABCD	Company(s) Name
STUFT	Ships Taken Up From Trade
AAAW	Advanced Air-launched Anti-armour Weapon
DSDA	Defence Storage and Distribution Agency
DMC	Defence Munitions Centre

E01234 ( ) CLASSIFICATION Page (xii)

Figure 9 Example 4 of an ALGW MMS introduction page

CLASSIFICATION AP Code-5A1
MASTER MAINTENANCE SCHEDULE
WEAPON NAME

INTRODUCTION

Training

9 Unit weapon training cells are responsible for training forward and depth line personnel to handle and load (weapon name) to the relevant aircraft.

Definitions

10 Explosive Life - The service life of (Weapon Name) is calculated from the date of official delivery to the MOD as annotated on the F640.

- Where given, the disposal life is the period from the end of the service life during which the (Weapon Name) system will remain safe for storage and any transportation required for the logistical disposal of the weapon. This life is valid providing that the storage conditions are maintained to the same standard as those required for the service life. During the period of the disposal life the usage of the weapon system is to be limited to those activities required for the logistical disposal.

Storage - The time for which an item of, supply, including explosives in given specific storage conditions, may be expected to remain safe and serviceable.

- For OMs the 'specific storage condition' is when 'Stored in their sealed humidity controlled AURC in a UK standard licensed permanent Explosive Storehouse fitted with thermostatically controlled heating'. An AURC is considered sealed when the procedures in DAP XXXX-XXXX-XA and JSP XXX Vol 1 have been done.

- Launchers and TMs, the 'specific storage condition' is 'Any condition equivalent to that provided in an enclosed permanent storage building at DSDA and DMC Depots'.

Operational life - For the (Weapon Name) system, Operational Life is linked to the storage conditions when the missile and launchers, sealed in their respective containers, are deployed forward to Operational Theatres.

- Operational life is defined as the time during which materiel may be expected to remain safe and serviceable when used in service or training conditions, when these are different from its storage conditions, but within the envelope of its life cycle.

For the OM the available storage is unlikely to have both temperature and humidity control therefore, for (Weapon Name), it is categorised as 'Temporary Storage', even if it is a substantial construction and well ventilated. Whenever the launcher container and sealed bag are opened the launcher exposure life starts.

E01234 ( ) CLASSIFICATION Page (xiii)

Figure 10 Example 5 of an ALGW MMS introduction page

CLASSIFICATION

AP Code-5A1

INTRODUCTION

Definitions (Contd)

10 Standby Life - For OMs the Standby life is defined as the maximum period of time that a weapon can be expected to remain safe and serviceable when it is removed from storage and the bare weapon is exposed to the prevailing environmental conditions with little or no protection – eg direct solar radiation when loaded to an aircraft or standing ready to be loaded. Any AURC lid removal is to count as one day of exposure. However, multiple lid removals on the same day are only to be counted as one exposure day. Lid removal is to be recorded on MOD F714 (AAW) as an unpacking action.

- For a launcher the Standby Life is defined as the maximum period of time that equipment can be expected to remain safe and serviceable when it is removed from storage and exposed to the prevailing environmental conditions with little or no protection. Consumption of standby life is to be kept to a minimum and recorded at all times.

Carriage Life - Each carriage life i.e. underslung loads, is consumed independently.

Underslung Load - Operational missiles can only be transported as an underslung load on the (Weapon Name) pallet, in an ISO or on a NATO pallet, (Aircraft Name) aircraft only.

RFA and STUFT - For RFA or STUFT sea transportation OMs can be transported as hold or deck cargo. However, storage on deck is to count against the operational storage life of the missile.

Air carriage - The air carriage time applied to maintenance periods in this Master Maintenance Schedule, is the cumulative period of air carriage hours. Launcher carriage life is consumed pro-rata, i.e. each hour loaded consumes X hours of unloaded life and vice versa.

Green card - Once an explosive component has reached the end of its service or operational life, it is to be placed into storage under green card system and further instruction is to be sought from the designated PT.

AMENDEMENTS

Schedule Amendments

11 This schedule is written to JAP(D) 100C-20 specification. A vertical line in the left-hand margin shows new or amended matter. Amendment procedure is detailed in ▶MAP-01 Chapter 8.2◀.

E01234 ( ) CLASSIFICATION Page (xiv)

Figure 11 Example 5 of an ALGW MMS introduction page

CLASSIFICATION

AP Code-5A1

MASTER MAINTENANCE SCHEDULE

WEAPON NAME

LIST OF SERVICING INSTRUCTIONS INCORPORATED IN THIS SCHEDULE

Trade	SIN	SI Title	Trade	SIN	SI Title	Trade	SIN	SI Title

E01234 ( )

CLASSIFICATION

Page (xv/(xvi)

Figure 12 Example of an ALGW list of servicing instructions page

CLASSIFICATION

AP Code-5A1

MASTER MAINTENANCE SCHEDULE
WEAPON NAME

LIST OF COMPONENTS OR SUB-ASSEMBLIES REQUIRING RECORD/LOG CARDS

SIN/Part No.	Item	Form	SIN/Part No.	Item	Form
1XXX-XXXX	Operational Missile	F714 (AAAW)			
1XXX-XXXX	Training Missile	F714 (AAAW)			
	Launchers	F714C (AAAW)			
	Wedge Adapters	RAF F6580			

E01234 ( )

CLASSIFICATION

Page (xvii/(xviii)

Figure 13 Example of an ALGW list of components or sub-assemblies requiring record/log cards page

CHAPTER 4-2

AIR LAUNCHED GUIDED WEAPON TOPIC 5A1 MMS – MASTER MAINTENANCE LIST

CONTENTS

Para

1 General
2 Compilation
3 Amendment
4 Example ALGW MML

Figure Page

1 Example of an ALGW MML list of contents page 3
2 Example of an ALGW MML chapter 1 sheet (recto) 4
3 Example of an ALGW MML chapter 1 sheet (verso) 5
4 Example of an ALGW MML chapter 2 sheet (recto) 6
5 Example of an ALGW MML chapter 3 sheet (recto) 7
6 Example of an ALGW MML chapter 3 sheet (verso) 8
7 Example of an ALGW MML chapter 4 sheet (recto) 9
8 Example of an ALGW MML chapter 5 sheet (recto) 10

GENERAL

1 The content of an ALGW MMS Master Maintenance List (MML) is a transcription of the maintenance task recommendations derived from RCM analysis as approved by the Platform PT. The layout of each MML is to be decided by the relevant schedule steering committee, with the following basic requirements contained in the MML.

1.1 Description of item to be maintained.

1.2 Condition of the item.

1.3 Frequency of each operation.

1.4 Operation to be done and reason.

1.5 Trade responsible for doing the operation.

1.6 Cross-reference to the publication containing the details of the maintenance required.

The MML is not to include information on safety precautions or supervision requirements.

COMPILATION

2 The MML contains a separate chapter for each assembly, ie operational missile and drill missile. The following guidelines are to be followed when compiling an MML:

2.1 Item description. The items of each assembly are listed as required. Items requiring qualifications for modification state or other reason have the qualification in brackets following the description and given a separate MML entry.

2.2 Condition. This entry details the usage condition of the item, ie in use, deep storage, etc.

2.3 Frequency. This entry details the frequency of each operation.

2.4 Operation. This entry details the required activity followed by the reason in code, which is compiled in accordance with ►MAP-01 Chapter 5.3.1◄.

2.5 Trade. This entry details the relevant trade authorized to do the operation.

2.6 Publication reference. This entry identifies the publication containing the details of the maintenance required.

AMENDMENT

3 Amendments to the MML are to follow the compilation details and the following guidelines:

3.1 Any new item is to be subjected to RCM analysis and approved by the designated PT before incorporation.

3.2 Amendment proposals to delete, or amend the frequency of an operation are to be subjected to RCM analysis and approved by the designated PT before incorporation.

3.3 When all the maintenance operations for an item are deleted from the MML, the item and all other references to the item are to be deleted.

EXAMPLE ALGW MML

4 Examples of the pages contained within the chapters of an ALGW MML are shown in Figures 1 to 8.

CLASSIFICATION
MASTER MAINTENANCE LIST
WEAPON NAME

AP Code-5A1

LIST OF CHAPTERS

	Sheet No.	No. of Sheets
Chapter 1 - Operational missile	1	1
Chapter 2 - Training missile	1	1
Chapter 3 - Launcher and wedge adapters	1	1
Chapter 4 - Test equipment	1	1
Chapter 5 - Missile containers	1	1

E01234 ( )

CLASSIFICATION

Figure 1 Example of an ALGW MML list of chapters page

Sheet 1

CLASSIFICATION
MASTER MAINTENANCE LIST
WEAPON NAME

AP Code-5A1
Chap 1

OPERATIONAL MISSILE

CODE F = Fatigue life
R = Reconditioned life
BM = Bay Maintenance
E = Explosive life)
T = Textile life)
P = Provisional life)
SL = Shelf life)

Compiled in accordance with ▶MAP-01 Chapter 5.3.1◀

Item	Condition	Operation and Reason		Trade	Frequency				Publication Reference
					XXXX Days	XXXX Days	XXXX Days	Out of Phase	
Operational Missile.	Storage.	XXXX Days (XX years).	E	Weapons			X		AP XXXX-XXXX-1A
		Desiccant check.		Weapons	X				
		Depth maintenance.	BM	Weapons		X			AP XXXX-XXXX-1A
		Return to store under a Green Card if any component reaches the end of its service or operational life. Disposal instructions are to be requested from the specialist PT.	F	Weapons				X	
	In use.	On condition.		Weapons				X	
	Operational life.	XXX Days or XX deployments.	F	Weapons				X	AP XXXX-XXXX-1A
		XXX Days or after any deployment.	BM					X	
		Desiccant check.				X			
	Standby life.	XXX Days	F	Weapons				X	AP XXXX-XXXX-1A
		XX Days	BM	Weapons				X	AP XXXX-XXXX-1A
	Fitted to launcher.	XX Hours (Aircraft name). XX mins over temperature max of X mins per sortie.	F	Weapons				X	AP XXXX-XXXX-1A

E01234 ( )

CLASSIFICATION

Figure 2 Example of an ALGW MML chapter 1 sheet (recto)

CLASSIFICATION

AP Code-5A1

Item	Condition	Operation and Reason		Trade	Frequency				Publication Reference
					XXXX Days	XXXX Days	XXXX Days	Out of Phase	
Operational Missile.	Internal AT ac	XXX Hours (Aircraft name).	F	Weapons				X	AP XXXX-XXXX-1A
	Underslung load	XXX Hours (Aircraft name).	F	Weapons				X	AP XXXX-XXXX-1A
	Road Transport	XX Days	F	Weapons				X	AP XXXX-XXXX-1A
	Rail Transport	XXX Days	F	Weapons				X	AP XXXX-XXXX-1A
	RFA or STUFT	XX Days	F	Weapons				X	AP XXXX-XXXX-1A

E01234 ( ) CLASSIFICATION

Figure 3 Example of an ALGW MML chapter 1 sheet (verso)

Sheet 1

CLASSIFICATION
MASTER MAINTENANCE LIST
WEAPON NAME

AP Code-5A1
Chap 2

TRAINING MISSILE

CODE F = Fatigue life
R = Reconditioned life
BM = Bay Maintenance
E = Explosive life)
T = Textile life)
P = Provisional life)
SL = Shelf life)

Compiled in accordance with ▶MAP-01 Chapter 5.3.1◀

Item	Condition	Operation and Reason		Trade	Frequency				Publication Reference
					XXXX Days	XXXX Days	XXXX Days	Out of Phase	
Training Missile.	In use.	Desiccant check.		Weapons	X				AP XXXX-XXXX-1A
		XXXX Air carriage hours.	F	Weapons				X	AP XXXX-XXXX-1
		Depth maintenance.	BM	Weapons				X	AP XXXX-XXXX-1A
		Return to store under a Green Card if any component reaches the end of its service or operational life. Disposal instructions are to be requested from the specialist PT.	F	Weapons				X	

E01234 ( )

CLASSIFICATION

Figure 4 Example of an ALGW MML chapter 2 sheet (recto)

CLASSIFICATION

Sheet 1 | MASTER MAINTENANCE LIST | AP Code-5A1

WEAPON NAME | Chap 3

LAUNCHER AND WEDGE ADAPTERS

CODE F = Fatigue life E = Explosive life)
R = Reconditioned life T = Textile life) Compiled in accordance with ▶MAP-01 Chapter 5.3.1◀
BM = Bay Maintenance P = Provisional life)
SL = Shelf life)

Item	Condition	Operation and Reason		Trade	Frequency				Publication Reference
					XXXX Days	XXXX Days	XXXX Days	Out of Phase	
Launcher.	Storage.	XXXX Days (XX years).	E	Weapons				X	AP XXXX-XXXX-1A
		Desiccant check.		Weapons	X				
	In use.	On condition		Weapons				X	AP XXXX-XXXX-1A
		Desiccant check.		Weapons	X				AP XXXX-XXXX-1A
		Post firing.	BM					X	
	Operational life.	XXX Days.	BM	Weapons				X	AP XXXX-XXXX-1A
		Desiccant check.		Weapons	X				AP XXXX-XXXX-1A
	Standby life	XXX Days	BM	Weapons				X	AP XXXX-XXXX-1A
	Carriage.	XXX Hours (Fully loaded).	F	Weapons				X	AP XXXX-XXXX-1A
		XXX Hours (Partially loaded).	F	Weapons				X	
		XXX Hours (Unloaded).	F	Weapons					
	Rail assembly.	XX Launches.	F	Weapons				X	AP XXXX-XXXX-1A
	Rail latch.	XXX Loads.	F	Weapons				X	AP XXXX-XXXX-1A

E01234 ( ) CLASSIFICATION

Figure 5 Example of an ALGW MML chapter 3 sheet (recto)

CLASSIFICATION

AP Code-5A1

Item	Condition	Operation and Reason	Trade	Frequency				Publication Reference
				XXXX Days	XXXX Days	XXXX Days	Out of Phase	
Ground Training Launcher.	In use.	On condition.	Weapons				X	AP XXXX-XXXX-1A
		Desiccant check.	Weapons	X				
Wedge Adapters (Aircraft name).	In use.	On condition.	Weapons				X	AP XXXX-XXXX-1A
	Carriage.	XXXX Hours loaded. F	Weapons				X	AP XXXX-XXXX-1A
		XXXX Hours unloaded. F F	Weapons				X	
Mace lugs and bolts.	In use.	XXXXX Flying hours. F	Weapons				X	AP XXXX-XXXX-1A

E01234 ( )

CLASSIFICATION

Figure 6 Example of an ALGW MML chapter 3 sheet (verso)

Sheet 1

CLASSIFICATION
MASTER MAINTENANCE LIST
WEAPON NAME

TEST EQUIPMENT

AP Code-5A1
Chap 4

CODE F = Fatigue life
R = Reconditioned life
BM = Bay Maintenance
E = Explosive life)
T = Textile life)
P = Provisional life)
SL = Shelf life)

Compiled in accordance with ▶MAP-01 Chapter 5.3.1◀

Item	Condition	Operation and Reason	Trade	Frequency				Publication Reference
				XXXX Days	XXXX Days	XXXX Days	Out of Phase	
Services Weapon Test Set (SWTS).	In use.	On condition.	Weapons				X	AP XXXX-XXXX-1A
Weapon Name Test Set (WNTS).	In use.	Calibration frequency set by (Name).	(Name)				X	AP XXXX-XXXX-1A
No Volts Test Leads.	In use.	On condition.	Weapons				X	AP XXXX-XXXX-1A

E01234 ( )

CLASSIFICATION

Figure 7 Example of an ALGW MML chapter 4 sheet (recto)

Sheet 1

CLASSIFICATION
MASTER MAINTENANCE LIST
WEAPON NAME

MISSILE CONTAINERS

AP Code-5A1
Chap 5

CODE F = Fatigue life
R = Reconditioned life
BM = Bay Maintenance
E = Explosive life)
T = Textile life)
P = Provisional life)
SL = Shelf life)

Compiled in accordance with ▶MAP-01 Chapter 5.3.1◀

Item	Condition	Operation and Reason	Trade	Frequency				Publication Reference
				XXXX Days	XXXX Days	XXXX Days	Out of Phase	
All Up Round Container (AURC).	In use.	Desiccant check.	Weapons	X				AP XXXX-XXXX-1A
		Desiccant check before each cover removal.	(Name)				X	
	In store.	Desiccant check.	Weapons	X				AP XXXX-XXXX-1A
		Desiccant check before each cover removal.	(Name)				X	

E01234 ( )

CLASSIFICATION

Figure 8 Example of an ALGW MML chapter 5 sheet (recto)

CHAPTER 5-0

TOPIC 5A2 HAZARD AND MAINTENANCE INFORMATION

CONTENTS

Para

1 Introduction
3 Details of Topic 5A2 preliminary pages
3 Front cover
4 Amendment record
5 Record of Advance Information Leaflets (AIL) and Service Amendment Leaflets (SAL)
6 Contents
7 Introduction
8 Health and safety at work
9 Details of Topic 5A2 chapter 1
10 Details of Topic 5A2 chapters 2, 2.1 and 2.2
14 Details of Topic 5A2 chapter 3
15 Details of Topic 5A2 chapter 4
16 Details of Topic 5A2 chapter 5
17 Writing rules applicable to a Topic 5A2

Figure Page

1 Example of a Topic 5A2 contents page 4
2 Example of a Topic 5A2 introduction page 5
3 Example of a Topic 5A2 health and safety at work page (recto) 6
4 Example of a Topic 5A2 health and safety at work page (verso) 7
5 Example of a Topic 5A2 chapter 1 card 8
6 Example of a Topic 5A2 chapter 2 card 9
7 Example 1 of a Topic 5A2 chapter 2.1 card 10
8 Example 2 of a Topic 5A2 chapter 2.1 card 11
9 Example 1 of a Topic 5A2 chapter 2.2 card 12
10 Example 2 of a Topic 5A2 chapter 2.2 card 13
11 Example 1 of a Topic 5A2 chapter 3 contents list 14
12 Example 2 of a Topic 5A2 chapter 3 contents list 15
13 Example 1 of a Topic 5A2 chapter 3 card 16
14 Example 2 of a Topic 5A2 chapter 3 card 17
15 Example of a Topic 5A2 chapter 4 contents list 18
16 Example 1 of a Topic 5A2 chapter 4 card 19
17 Example 2 of a Topic 5A2 chapter 4 card 20
18 Example 1 of a Topic 5A2 chapter 5 card 21
19 Example 2 of a Topic 5A2 chapter 5 card 22
20 Example 3 of a Topic 5A2 chapter 5 card 23

INTRODUCTION

1 The Topic 5A2 contains information on the operating and materiel hazards which may affect any person involved in the operation or maintenance of an aircraft. Hazards include those identified as part of the Control of Substances Hazardous to Health (COSHH) regulations as well as other general hazards associated with the aircraft. The Topic 5A2 also contains a list of definitions, a glossary of terms and information on the requirement for independent checks.

2 The Topic 5A2 consists of a series of preliminary pages followed by 5 separate chapters. Chapter 2 is followed by two sub-chapters; Chapter 2.1 and Chapter 2.2.

DETAILS OF TOPIC 5A2 PRELIMINARY PAGES

Front cover

3 The front cover forms the title page of the Topic 5A2 as explained in Chapter 2. Examples of front covers are presented in Chapter 2-0, Figures 1 to 3.

Amendment record

4 The Amendment Record is a common preliminary page as described in Chapter 2. An example Topic 5A2 Amendment Record is presented in Chapter 2-0, Figures 6 and 7.

Record of Advance Information Leaflets (AIL) and Service Amendment Leaflets (SAL)

5 The Record of AILs and SALs is a common preliminary page as described in Chapter 2-0. An example Topic 5A2 Record of AILs and SALs is shown in Chapter 2-0, Figures 10 and 11.

Contents

6 An example of a Topic 5A2 Contents page is shown in Figure 1.

Introduction

7 An example of a Topic 5A2 Introduction page is shown in Figure 2.

Health and safety at work

8 An example of a Topic 5A2 Health and Safety at Work pages is shown in Figures 3 and 4.

DETAILS OF TOPIC 5A2 CHAPTER 1

9 Chapter 1 contains a series of cards that detail a list of definitions and a glossary of terms used in Topic 5 publications. An example of a Chapter 1 page is shown in Figure 5. The glossary of terms should be written in accordance with Chapter 1-4 Annex A.

DETAILS OF TOPIC 5A2 CHAPTERS 2, 2.1 AND 2.2

10 Chapter 2, Chapter 2.1 and Chapter 2.2 contain information on hazardous substances.

11 Chapter 2 consists of a single card that contains information on the Control of Substances Hazardous to Health (COSHH), an example of which is shown in Figure 6.

12 Chapter 2.1 consists of cards that contain information on the substances incorporated in an aircraft, an example of which is shown in Figures 7 and 8.

13 Chapter 2.2 consists of cards that contain information on the substances authorized for use in an aircraft, an example of which is shown in Figures 9 and 10.

DETAILS OF TOPIC 5A2 CHAPTER 3

14 Chapter 3 contains warnings to alert any person involved in the operation or maintenance of an aircraft of the possible hazards that may cause loss of life, physical injury or ill health in any form. This chapter consists of a contents list followed by a series of cards that promulgates the warnings in system/sub-system order. An example of a Chapter 3 contents list and associated cards is shown in Figures 11 to 14 inclusively.

DETAILS OF TOPIC 5A2 CHAPTER 4

15 Chapter 4 contains cautions to alert any person involved in the operation or maintenance of an aircraft that certain activities may cause damage to equipment, but present no danger to personnel. This chapter consists of a

contents list followed by a series of cards that promulgates the cautions in system/sub-system order. An example of a Chapter 4 contents list and associated cards is shown in Figures 15 to 17 inclusively.

DETAILS OF TOPIC 5A2 CHAPTER 5

16 Chapter 5 contains a series of cards that list those systems and associated sub-systems that require independent checks in accordance with ►MAP-01 Chapter 6.10, Chapter 12.2.1 and Chapter 13.1.2◄. Examples of Chapter 5 cards are shown in Figures 18 to 20 inclusively.

WRITING RULES APPLICABLE TO A TOPIC 5A2

17 The following rules apply when compiling a Topic 5A2:

17.1 Content of warnings and cautions. The Topic 5A2 is not to be used as a substitute for management and supervision. Therefore, hazards are not to be included which arise from management or supervision failure or from the failure of personnel to comply with other orders and instructions.

17.2 Applicability of warnings and cautions. Topic 5A2 entries are to be specific to the aircraft type and must only apply to hazards which exist in normal circumstances. Hypothetical risks arising as secondary consequences of random failure or incidents are not to be inserted as warnings and cautions.

17.3 COSHH warnings. The responsibility for identifying hazardous substances lies with the relevant PT. Authors are therefore to make sure that any hazardous substance introduced into a maintenance schedule and subsequently the Topic 5A2 has been approved for use by the PT.

17.4 Use of diagrams. Where possible, diagrams, charts and tables should be used to present information. Danger areas should be drawn to the same scale as the aircraft. This will not be possible with all aircraft types; however, clear indication of the extent of danger areas is to be shown. Diagrams which show hazards should present the view of the hazard that the reader will be expected to encounter. Charts and tables should present information in a clear and unambiguous manner.

17.5 Format of warnings and cautions. Warnings and cautions must start with a simple clear command telling the reader what he must do to avoid the danger. The command must not be hidden in a jumble of background information. Background information or consequences are to follow the command.

17.6 Coloured edgings for Topics 5A2. Warnings pages shall be indicated by a red band 12mm wide at the outside edge of each page. Cautions pages shall be indicated by a green/cyan band 12 mm wide at the outside edge of each page.

17.7 Warnings for weapons. Entries which relate to an aircraft's weapons are only to be included if they refer to on-aircraft hazards. Hazards arising as a result of mishandling or misfires are not to be published in the Topic 5A2.

AP Code-5A2

HAZARD AND MAINTENANCE
INFORMATION
AIRCRAFT NAME

CONTENTS

Preliminary Material — Page

Title page ..... (i)/(ii)
Amendment record ..... (iii) and (iv)
Record of Advance Information
Leaflets (AIL) and Service Amendment
Leaflets (SAL) ..... (v) and (vi)
Contents list (This page) ..... (vii)/(viii)
Introduction ..... (ix)/(x)
Health and safety at work ..... (xi) and (xii)

		No. of Cards
Chapter 1	- Definitions and Glossary of Terms	2
Chapter 2	- Hazardous substance information	`1
Chapter 2.1	- Substances incorporated in the aircraft	1
Chapter 2.2	- Substances authorized for use on - the aircraft	1
Chapter 3	- Warnings	1
Chapter 4	- Cautions	1
Chapter 5	- Systems requiring independent - inspection	1

EXXXX(X) Page (vii)/(viii)

Figure 1 Example of a Topic 5A2 contents page

AP Code-5A2

HAZARD AND MAINTENANCE
INFORMATION
AIRCRAFT NAME

INTRODUCTION

1 The purpose of this Topic 5A2 is to provide personnel with a single point of reference to hazards which may be encountered with the (Aircraft Name) aircraft. This Topic 5A2 is to be referred to during all maintenance operations.

2 The following hazards are listed in this Topic 5A2:

2.1 Hazardous substances for which the Control of Substances Hazardous to Health (COSHH) regulations are applicable. This includes substances incorporated in the aircraft as well as those which are authorized for use on the aircraft.

2.2 Hazards other than those listed as COSHH hazards which may kill or injure personnel approaching or working on the aircraft.

2.3 Those which may cause damage to equipment.

3 Chapter 1 contains definitions and the glossary of terms which are authorized for use in the maintenance schedules for the (Aircraft Name) aircraft.

AMENDMENTS

4 This 5A2 is written to JAP(D) 100C-20 specification. New or amended material is indicated by vertical lines in the outer margin. Amendment procedure is detailed in ►MAP-01 Chapter 8.2◄.

EXXXX(X) Page (ix)/(x)

Figure 2 Example of a Topic 5A2 introduction page

AP Code-5A2

HAZARD AND MAINTENANCE
INFORMATION
AIRCRAFT NAME

HEALTH AND SAFETY AT WORK

1 The Health and Safety at Work etc. Act 1974 (HSWA) requires you to:

1.1 Take reasonable care for the Health and Safety (H&S) of yourself and other persons who may be affected by your actions or omissions at work.

1.2 Co-operate with your supervisors and any other persons to enable them to comply with any safety and legal requirements.

1.3 Not intentionally or recklessly interfere with or misuse anything supplied in the interest of health, safety or welfare.

JSP 375 - HEALTH AND SAFETY HANDBOOK

2 JSP 375 provides instruction and guidance on the policy, top-level organisation and arrangements by which the Ministry of Defence ensures the maintenance of acceptable standards of H&S throughout the organisation. Both the HASAW and the Secretary of State's H&S policy apply to all members of HM Forces and MOD civilian employees, and to all activities done under the control of the Secretary of State for Defence.

3 All line managers and employees must comply with:

3.1 The guidance and requirements of JSP 375.

3.2 All locally promulgated orders and procedures.

3.3 All risk mitigation measures and safety requirements assessed and associated with any work activity done on this aircraft and equipment.

EXXXX(X) Page (xi)

Figure 3 Example of a Topic 5A2 health and safety at work page (recto)

AP Code-5A2

GENERIC HAZARDS

4 The following paragraphs describe the generic hazards that may be encountered whilst working on or around this aircraft or equipment. The types of hazard described are not exhaustive, nor are the descriptions a substitute for a proper hazard analysis or risk assessment of the task.

Working at height

5 Personnel involved in the operation or maintenance of this equipment may be required to work at height, which may include the use of ladders, access staging or supporting platforms. Suitable precautions are to be taken to prevent personal injury, refer to JSP 375 Vol 2, local and other appropriate Engineering Orders.

Confined spaces

6 Personnel may be required to work in confined spaces during certain operations or maintenance activities on this equipment. Suitable precautions are to be taken to prevent personal injury, refer to JSP 375 Vol 2, JSP 515, COSHH, local and other appropriate Engineering Orders.

Working with electricity and electrical equipment

7 Danger to personnel from electricity exists in this equipment and from electrical equipment used in and on this equipment. Suitable precautions are to be taken to prevent personal injury, refer to JSP 375 Vol 2, AP 120A-0001-1, local and other appropriate Engineering Orders.

Manual handling

8 Personnel may be required to manually handle loads or move heavy objects during operation or maintenance of this equipment. Suitable precautions against personal injury or equipment damage are to be taken, refer to JSP 375 Vol 2, local and other appropriate Engineering Orders.

Noise at work

9 Personnel may be exposed to high noise levels during operation or maintenance of this equipment. Suitable ear protection is to be worn and precautions are to be taken to prevent personal injury.

EXXXX(X) Page (xi)

Figure 4 Example of a Topic 5A2 health and safety at work page (verso)

Card 1 AP Code-5A2

HAZARD AND MAINTENANCE INFORMATION (AIRCRAFT NAME) Chap 1

DEFINITIONS AND GLOSSARY OF TERMS

DEFINITIONS

1 This chapter contains definitions and the glossary of terms used in the XXX publications.

2 WARNINGS, CAUTIONS and notes are defined as follows:

2.1 WARNINGS are used to alert the reader to possible hazards which may cause loss of life, physical injury or ill health in any form.

2.2 CAUTIONS are used to denote the possibility of causing damage to equipment but not danger to personnel.

2.3 Notes are used to convey, or draw attention to, information that is extraneous to the immediate subject of the text.

GLOSSARY

3 Where the following underlined words or phrases appear in maintenance schedules they are defined as below:

3.1 See authors note.

AUTHORS NOTE: Insert an appropriate Glossary of Terms in accordance with Chapter 1-4 Annex A.

EXXXX(X) Continued

Figure 5 Example of a Topic 5A2 chapter 1 card

Card 1 AP Code-5A2

HAZARD AND MAINTENANCE INFORMATION Chap 2

AIRCRAFT NAME

HAZARDOUS SUBSTANCE INFORMATION

CONTROL OF SUBSTANCES HAZARDOUS TO HEALTH

1 This chapter contains lists of hazardous substances and materials the use of which is regulated by the Control of Substances Hazardous to Health (COSHH) legislation. The substances fall into the following two sub-chapters:

2.1 Substances incorporated in the aircraft.

2.2 Substances authorized for use on the aircraft.

WARNING

MAKE SURE THAT YOU KNOW THE SAFETY PRECAUTIONS AND FIRST AID INSTRUCTIONS BEFORE YOU USE A HAZARDOUS SUBSTANCE.

READ THE LABEL ON THE CONTAINER IN WHICH THE SUBSTANCE IS SUPPLIED.

READ THE DATA SHEET APPLICABLE TO THE SUBSTANCE.

OBEY THE LOCAL ORDERS AND REGULATIONS.

2 Further information on the items listed on the following pages of Chapter 2 may be found in:

2.1 MF911 COSHH assessment (which may have been done and completed using JSP 375 for guidance).
2.2 Manufacturers' labels or Safety Sheets.
2.3 Hazardous Stores Information System (HSIS) (JSP 515).
2.4 Local Health and Safety orders and regulations.

3 Whenever a conflict is observed between the instructions given in the above publications, the instructions concerned are to be acted upon in the above order of precedence.

EXXXX(X)

Figure 6 Example of a Topic 5A2 chapter 2 card

Card 1 AP Code-5A2

HAZARD AND MAINTENANCE INFORMATION Chap 2.1

AIRCRAFT NAME

SUBSTANCES INCORPORATED IN THE AIRCRAFT

Substance	Location
ASBESTOS	Engine Compartment
BERYLLIUM	Transmitters/Electrical Components Turret Power Amplifier
BROMOCHLORODIFLOUR-OMETHANE (BCF)	Fire Extinguisher
CADMIUM	Shims/Bolts/Connectors
COMPOSITE MATERIALS	General Use
DIMETHYLFORMAMIDE (DMF)	High Intensity Strobe Light Power Supply Unit
ELECTROLYTE	Batteries
FUEL (AVTUR, AVTAG, AVCAR)	Fuel System
LEAD	Elevator Balance Horn
LITHIUM SULPHUR	SLB Batteries
MAN MADE MINERAL FIBRES	General
NICKELOUS SULPHATE(Ni SO_4)	AN/AAR-47 Spectral Filter Assembly
Nickel (LZ1) AN/AAR-57 (EOMS)	
OIL OM-15 (NATO H-515)	Brake System

EXXXX(X) Continued

Figure 7 Example 1 of a Topic 5A2 chapter 2.1 card

AP Code-5A2

Substance	Location
OIL OX-27 (NATO O-156)	Engine
PTFE	Bushes and Electrical Components
Thorium Fluoride	Turret

EXXXX(XA)

Figure 8 Example 2 of a Topic 5A2 chapter 2.1 card

Card 1 AP Code-5A2

HAZARD AND MAINTENANCE INFORMATION Chap 2.2

AIRCRAFT NAME

SUBSTANCES AUTHORIZED FOR USE ON THE AIRCRAFT

Substance	Location
ACETONE	Specified Processes
AEROKLEEN	Specified Processes
AIRCRAFT CLEANING COMPOUND ARDROX 6025/BASOL 182A	General Cleaning
AIRCRAFT CLEANING COMPOUND BASOL 650A	Cleaning Heavily Soiled Areas
ALCOHOL AL-11 (NATO S-737)	Specified Processes
ALOCROM 1200	Protection of Aluminium and Magnesium Alloys
ARALDITE AV119	Specified Processes
ARALDITE AV5308	Specified Processes
ARALDITE AW106	Specified Processes
ARALDITE AW139	Specified Processes
ARALDITE AW2104	Specified Processes
ARALDITE 252 A/B	Specified Processes
ARALDITE 2001	Specified Processes
ARALDITE AY103	Specified Processes
BOSTIC 1755	Specified Processes
BOSTIC 2402	Specified Processes

EXXXX(XX) Continued

Figure 9 Example 1 of a Topic 5A2 chapter 2.2 card

AP Code-5A2

Substance	Location
DEOXIDENE	Treatment of Aluminium Alloys
DOUBLE BOND	General Filler
EVOSTICK 528	Specific Applications
FASTBOND 10	Specified Processes
GENKLENE	Specific Cleaning Components
GLYCOL AL-5 (NATO S-745)	Aircraft Anti/ De-icing
GLYCOL AL-34 (NATO S-1746)	Aircraft Anti/ De-icing
GREASE XG-276 (NATO G-353)	Specified Components
GREASE XG-285 (NATO G-355)	Specified Heavily Loaded Parts
GREASE XG-287 (NATO G-354)	General Purpose Low Temperature
GREASE XG-293 (NATO G-395)	General Purpose
GREASE XG-315 (NATO G-394)	General Metal to Rubber

EXXXX(XXA)

Figure 10 Example 2 of a Topic 5A2 chapter 2.2 card

AP Code-5A2
Chap 3

HAZARD AND MAINTENANCE
INFORMATION
AIRCRAFT NAME

WARNINGS

CONTENTS LIST

System/ Sub-system	Item	Card No.
00/20	Maintenance aft of Mainplane	1
07/00	Working at height	1
21/40	Cabin heater exhaust	1
23/00	Airborne Radio Installations (ARI) - Transmission	1
23/00	Aerials	1
24/00	High voltage electrical supplies	2
33/40	High intensity strobe lights	2
34/40	Microwave radiation hazard	2
35/00	Aircraft oxygen systems	3
57/61	Aileron mass balance weights	3
72/00	Engine running danger areas	3
74/00	Engine high energy ignition system	4
93/50	MX-15 surveillance system	4
99/20	MAWS AN/AAR-47	4
99/30	Vicon 78 Series 455 counter-measures Dispensing system	4
Fig 1	Cabin heater exhaust	1

EXXXX(XX) Continued

Figure 11 Example 1 of a Topic 5A2 chapter 3 contents list

```
AP Code-5A2

Fig 2       Microwave radiation danger area ..........    2

Fig 3       Engine running danger area ...............    4

Fig 4       Flare danger areas .......................    2
```

EXXXX(XXA)

Figure 12 Example 2 of a Topic 5A2 chapter 2.2 card

Card 1 AP Code-5A2

HAZARD AND MAINTENANCE INFORMATION Chap 3

AIRCRAFT NAME

WARNINGS

00/20 Maintenance Aft of Mainplane

Make sure the tail trestle is installed before you start work in or on the rear fuselage or tail section.

07/00 Working at Height

When working at height, make sure that the correct ground equipment is used and the correct safety precautions are observed.

21/40 Cabin Heater Exhaust

The cabin heater exhaust is hot when in use/shortly after shutdown and produces noxious fumes. Do not work in the area of Fig 1 for 10 minutes after heater shutdown.

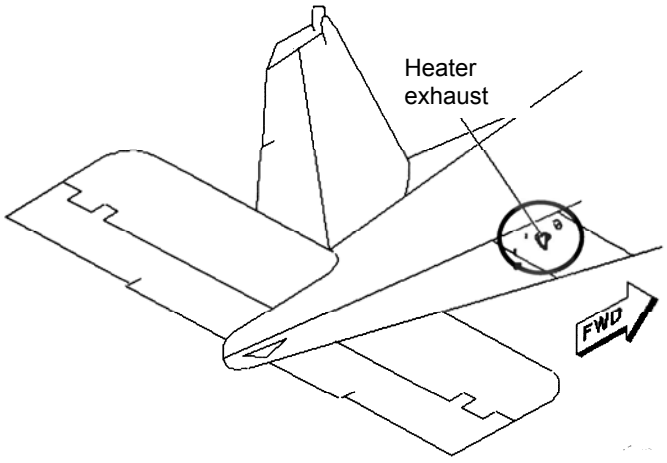

Fig 1 Cabin heater Exhaust

EXXXX(XX) Continued

Figure 13 Example 2 of a Topic 5A2 chapter 3 contents list

AP Code-5A2

23/00 Airborne Radio Installations (ARI) - Transmission

1 ARIs are only to be operated by specialist tradesmen, except where other tradesmen are specifically authorized.

2 Personnel about to operate ARI transmitters are to indicate clearly to personnel working on the aircraft, which aerial is to be used and warn them not to approach within 1.8 m (6 ft) of that aerial.

3 ARI transmitters are not to be operated when:

- Persons are within 1.8 m (6 ft) of the in-use aerial.
- The aircraft is being refuelled or defuelled.
- Aircraft which are less than 15 m (50 ft) away fr
- Weapon loading, unloading, arming or disarming is in progress within 15 m (50 ft).

23/00 Aerials

The numerous protruding aerials can cause injury to maintenance personnel. Personnel must take care to avoid contact with aerials.

EXXXX(XXA)

Figure 14 Example 1 of a Topic 5A2 chapter 3 card

AP Code-5A2
Chap 4

HAZARD AND MAINTENANCE
INFORMATION
AIRCRAFT NAME

CAUTIONS

CONTENTS LIST

System/ Sub-system	Item	Card No.
24/00	Electrolyte Spillage - Aircraft Structure	1
24/00	Plugs and Sockets - Lubrication	1
24/70	Earthing of Aircraft and Ground Equipment	2
26/00	Firewire Sensing Elements - Check for Damage	2
30/00	Pneumatic De-icer Boots	2
32/00	Nitrogen and Air	2
32/10	Hydraulic Components - Chlorinated Solvents	2
35/00	Aircraft Oxygen System	3
52/10	Stressed Panels	3

EXXXX(XX)

Figure 15 Example of a Topic 5A2 chapter 4 contents list

Card 1 AP Code-5A2

HAZARD AND MAINTENANCE INFORMATION Chap 4

AIRCRAFT NAME

CAUTIONS

24/00 Electrolyte Spillage - Aircraft Structure

Spillage of battery electrolyte must be cleaned up immediately in accordance with AP119A-0200-1C. Electrolyte is very corrosive and can seriously damage aircraft structure.

24/00 Plugs and Sockets - Lubrication

1 Use only grease XG-250 (NATO G-736) to lubricate the threads of plugs and sockets.

2 Never apply lubricant to the pins or inserts.

EXXXX(XX) Continued

Figure 16 Example 1 of a Topic 5A2 chapter 4 card

AP Code-5A2

24/70 Earthing of Aircraft and Ground Equipment

Earth the aircraft and ground equipment as shown in Tables 1 and 2. Table 1 lists the earthing requirements if using:

- Electrically driven GPU without negative/neutral strapped chassis.
- Engine driven GPU.
- External batteries.
- No external power supply connected.

TABLE 1

Operation	Is power supply compatible with operation	Earth connection between aircraft and true earth	Separate earth connection	
			Aircraft and GPU	GPU and true earth
Refuelling Defuelling	Yes	Yes	No	No
Servicing/ Maintenance	Yes	Yes	No	No
Use of mains powered equipment	Yes	Yes	No	No

EXXXX(XXA)

Figure 17 Example 2 of a Topic 5A2 chapter 4 card

```
Card 1                                                    AP Code-5A2
                        HAZARD AND MAINTENANCE                 Chap 5
                              INFORMATION
                             AIRCRAFT NAME

                SYSTEMS REQUIRING INDEPENDENT INSPECTION

  GENERAL

  1   An independent inspection must be done if specified parts
  of the aircraft systems are disturbed; that is, disconnected,
  replaced or adjusted during maintenance. The supervisor is to
  ascertain if an independent inspection is required.

  AIRCRAFT CONTROL SYSTEMS

  2   The requirements and responsibilities for independent
  inspections on aircraft control systems are detailed in ►MAP-
  01 Chapter 6.10◄. An independent inspection is to be done on
  the systems listed below when disconnected, replaced or
  adjusted during maintenance.

  AUTHORS NOTE: The list of systems will be as stipulated by the
  platform PT and may also be detailed in the platform Topic
  2(N/A/R)1.

      2.1   Structure

            55-21  Tabs          )
            55-20  Elevators     )
            55-40  Rudder        )  Attachment points.
            57-50  Flaps         )
            57-60  Ailerons      )

      2.2   Flight Controls

            27-10  Ailerons
            27-20  Rudder
            27-30  Elevator bias system
            27-40  Flaps

      2.3   Auto Pilot

            22-10  Auto pilot system.

EXXXX(XX)                                                Continued
```

Figure 18 Example 1 of a Topic 5A2 chapter 5 card

AP Code-5A2

2.5 Engine and Associated Systems

61-10 Propeller pitch change control system.
73-10 Fuel cock control system.
76-10 Throttle control system.
76-10 Hp cocks control system.

PITOT STATIC SYSTEMS

3 The requirements and responsibilities for an independent sense and leak test on aircraft pitot and static systems are detailed in ▶MAP-01 Chapter 12.2.1◀. An independent test is to be done on the pitot and static system following the connection of any pitot or static pipeline to another item of equipment, including connection to another pipeline or other system element.

EXXXX(XXA)

Figure 19 Example 2 of a Topic 5A2 chapter 5 card

AP Code-5A2

AIRCRAFT ASSISTED ESCAPE SYSTEMS

4 The requirements and responsibilities for independent checks on an aircraft assisted escape system (AAES) are detailed in ►MAP-01 Chapter 13.1.2◄. An independent check is to be done on the AAES after installation or re-installation of a component part of the AAES.

EXXXX(XXA)

Figure 20 Example 3 of a Topic 5A2 chapter 5 card

CHAPTER 6-0

AIRCRAFT TOPIC 5A3 MAINTENANCE PROCEDURES

CONTENTS

Para

1 Introduction
2 Justification for producing an MP
3 Format of a topic 5A3
6 Preliminary pages
6 Front cover
7 Amendment record
8 Record of Advance Information Leaflets (AIL) and Service Amendment Leaflets (SAL)
9 Contents
10 Introduction
11 Health and safety at work
12 Layout of maintenance procedures
12 General
14 Allocation of MP numbers
15 Numbering of MP work cards
16 Layout of MP work cards
17 Content
22 Example MP work card

Figure Page

1 Layout of a Topic 5A3 maintenance procedures 5
2 Example of a Topic 5A3 contents page 6
3 Example of a Topic 5A3 introduction page 7
4 Example of a Topic 5A3 list of chapters page 8
5 Example of a Topic 5A3 list of contents page 9
6 Example of a Topic 5A3 MP work card 10

INTRODUCTION

1. Wherever possible, the preferred method of promulgating a Maintenance Procedure (MP) is within the Topic 1 Aircraft Maintenance Manual (AMM). Where a Topic 5A3 Maintenance Procedures publication exists for a particular aircraft, that information should normally be transferred to the AMM at the earliest suitable opportunity and the Topic 5A3 withdrawn. However, a platform PT may choose to retain the production of a Topic 5A3 if amendment to the AMM is considered impractical. Such action is particularly appropriate for historic aircraft where dated versions of an AMM may not be suited to the incorporation of MP work cards.

JUSTIFICATION FOR PRODUCING AN MP

2. An MP may need to be produced for the following reasons:

2.1. To support the more complex maintenance operations detailed in the maintenance schedule and, in so doing, avoid the need for repetition throughout the schedule.

2.2. To support other maintenance operations such as component replacement and functional tests.

2.3. A maintenance activity requires multi-trade involvement.

2.4. Safety implications exist, which need formal and/or systematic definition in order to obviate maintenance or in-flight hazards.

2.5. When the task extends beyond a normal work shift.

FORMAT OF A TOPIC 5A3

3. A Topic 5A3 consists of a series of preliminary pages followed by 5 discrete sections as follows:

3.1. Section 1 - Component Replacements.

3.2. Section 2 - Functional Checks and Tests.

3.3. Section 3 - Examinations and Structural integrity.

3.4. Section 4 - Maintenance Diagrams.

3.5. Section 5 - Miscellaneous (Special inspections etc).

4. Each section is divided into chapters that are allocated to each trade. Alternatively, the platform PT may authorize the sub-division of the Topic 5A3 into separate topics by trade as shown in the following example:

4.1. Topic 5A3A - Mech.

4.2. Topic 5A3B - Wpns.

4.3. Topic 5A3C - Av.

5. The general layout of a typical Topic 5A3 is shown in Figure 1.

PRELIMINARY PAGES

Front cover

6. The front cover forms the title page of a Topic 5A3. Examples of front covers are presented in Chapter 2-0, Figures 1 to 3.

Amendment record

7. The Amendment Record is a common preliminary page as described in Chapter 2. Examples of A4 size Amendment Records are presented in Chapter 2-0, Figures 4 to 7.

Record of Advance Information Leaflets (AIL) and Service Amendment Leaflets (SAL)

8. The Record of AILs and SALs is a common preliminary page as described in Chapter 2-0. Examples of A4 size Records of AILs and SALs are shown in Chapter 2-0, Figures 8 to 11.

Contents

9. The Contents page contains a list of headings that summarizes the make up of a Topic 5A3. An example Contents page is shown in Figure 2.

Introduction

10. The introduction provides information regarding the general use and completion of the MPs detailed in the Topic 5A3. An example Introduction page is shown in Figure 3.

Health and safety at work

11. An example of a Health and Safety at Work page is shown in Chapter 11-0, Figure 2.

LAYOUT OF MAINTENANCE PROCEDURES

General

12. Each section of MPs is divided into a series of chapters that represent each of the trades associated with the Topic 5A3. Each chapter contains all of the MP work cards associated with a particular trade. An example of a List of Chapters is shown in Figure 4 and an example of a List of Contents is shown in Figure 5.

13. When a maintenance procedure is reproduced as an annex to the Flight Servicing Schedule (Topic 5B1) this is to be indicated on the first card of the MP immediately below the card header, eg. 'The content/part of this MP is also contained in AP Code No.-5B1 as Annex XX'. The annex is also to refer to the MP.

Allocation of MP numbers

14. The project team leader is to allocate an adequate series of numbers for use by individual trades within each section of Topic 5A3. This allocation should be sufficient to allow for future requirements.

Numbering of MP work cards

15. MP work cards are sequentially numbered, the first card annotated with the total number of cards in the MP.

Layout of MP work cards

16. The text of work cards is divided into blocks as follows:

16.1. A new block is made for each change of work item.

16.2. Each block is individually numbered beginning with Block 1 on each card.

16.3. Each block has a main centre heading indicating the trade responsible.

16.4. The work item is indicated by a sub-heading on the left of the block.

16.5. Work items are numbered sequentially throughout the procedure.

16.6. Work sub-items are numbered sequentially throughout the work item using a decimal numbering system.

16.7. In the event of a work item extending into the next card the sub-heading is repeated and '(Cont'd)' added.

16.8. Details of all special-to-type tools and equipment precede block 1 on the first card of the MP.

16.9. Out-of-phase maintenance activities from the MML that are incorporated in the procedure are identified by their SIN in brackets under the item description.

16.10. Associated MP numbers are indicated in the block provided on the first card of the MP.

16.11. MP numbering and headings are on both the back and front of work cards.

16.12. A standard entry, contained within the card header, is to direct the user of the procedure to the information contained in the Topic 5A2.

16.13. When an operation detailed within the procedure is hazardous, a suitable warning or caution is entered immediately prior to that operation.

Content

17. MPs are not to be used as a means of discharging the management responsibility for ensuring that correct procedures are followed in cases, which on their own, do not justify MP treatment.

18. Corrective maintenance is not to be included in an MP.

19. The content of an MP should be self-sufficient for completion of the task with minimum reference to other maintenance information.

20. Cross-reference may be made to other MPs or to Topic 10 (Maintenance Diagrams). Cross-reference to AMM descriptive or maintenance information in narrative style should be minimized. Any explanatory sketches, diagrams etc needed to undertake a task are to be incorporated in the MP.

21. All power requirements and 'Safe for Maintenance' conditions should be covered by specific MP instructions either in the body of the MP or in the 'Preparation' and/or 'Completion' blocks.

Example MP work card

22. An example of a Topic 5A3 MP work card is shown in Figure 6.

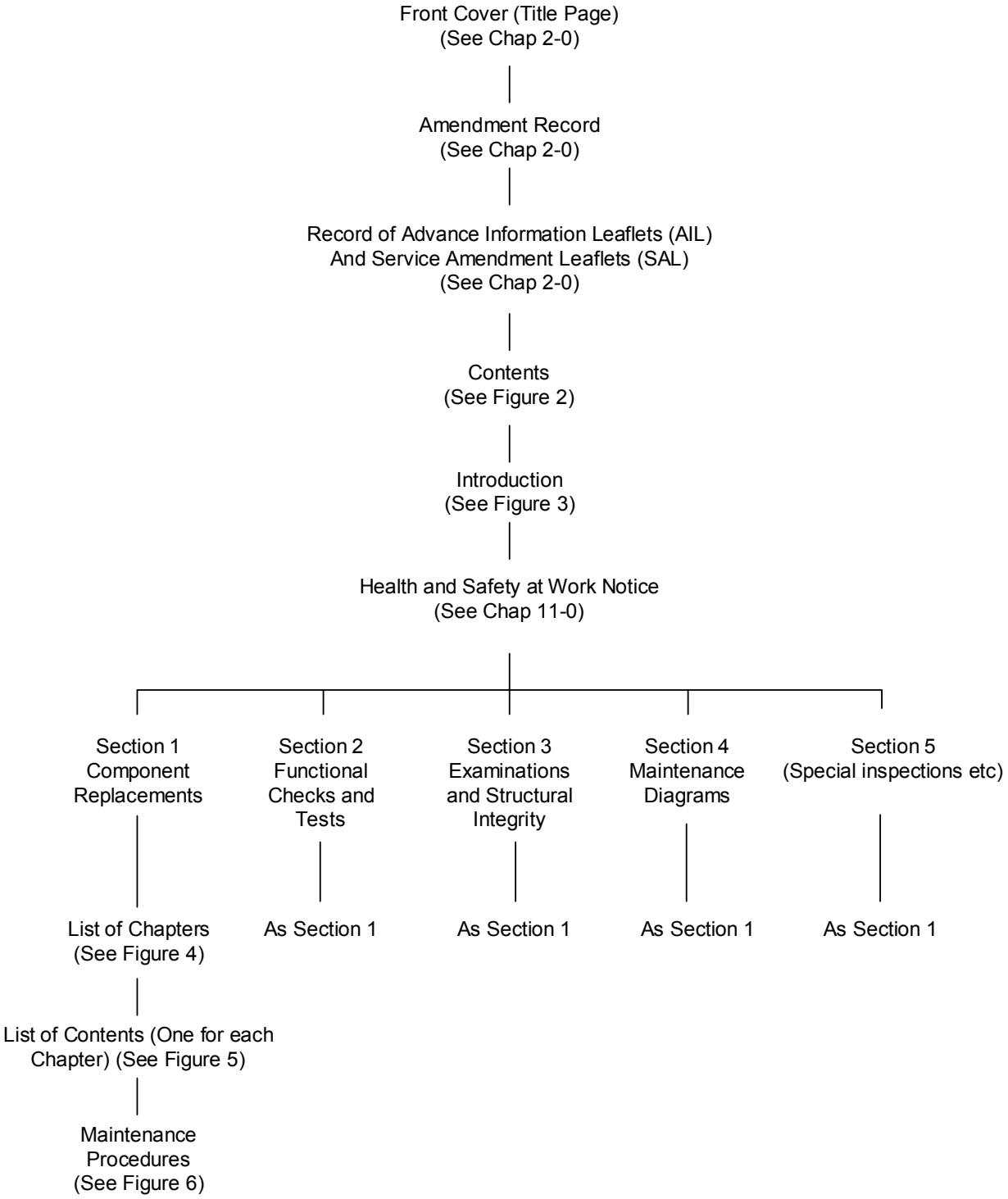

Figure 1 Layout of a Topic 5A3 maintenance procedures

MAINTENANCE PROCEDURES
AIRCRAFT NAME

AP Code-5A3

CONTENTS

Preliminary Material

Front cover (Title page) ..... (i)/(ii)
Amendment record ..... (iii) and (iv)
Record of Advance Information Leaflets (AIL) and Service Amendment Leaflets (SAL) ..... (v) and (vi)
Contents (This list) ..... (vii)/(viii)
Introduction ..... (ix)/(x)
Health and safety at work ..... (xi)/(xii)

Sections

1 Component Replacements
2 Functional Checks and Tests
3 Examinations and Structural Integrity
4 Maintenance Diagrams
5 Miscellaneous

E01234 ( )

Page (Vii)/(viii)

Figure 2 Example of a Topic 5A3 contents page

MAINTENANCE PROCEDURES
AIRCRAFT NAME

AP Code-5A3

INTRODUCTION

1 This Topic 5A3 contains information, orders, maintenance procedures and maintenance operations to be done in conjunction with the work detailed in AP XXXX-XXXX- 5A1. The Maintenance Procedures may also be used in support of corrective maintenance, out-of-phase maintenance and component replacement.

2 When an item is identified as a Structurally Significant Item (SSI) in accordance with ▶MRP RA5720◀, the item description is followed immediately by the identifier '(SSI)'. The identifier is to include the SSI number. Operations that specify detailed examinations of an SSI are to be done by personnel who are authorized in accordance with ▶MRP RA5720◀. SSI lists and illustrations can be found in the Topic 5V.

3 Substances which are subject to 'Control of Substances Hazardous to Health' (COSHH) assessment are highlighted in this topic immediately prior to their use. Reference is to be made to the Topic 5A2, Hazard and Maintenance Information, before doing any maintenance involving these substances.

4 New or amended material is indicated by a vertical line in the left hand margin to show the extent of the amendment.

E01234 ( )

Page (xix)/(viii)

Figure 3 Example of a Topic 5A3 introduction page

MAINTENANCE PROCEDURES
COMPONENT REPLACEMENTS
AIRCRAFT NAME

AP Code-5A3
Sect 1

LIST OF CHAPTERS

	MP Nos. Allocated
Chapter 1 - Mechanical	1 - 40
Chapter 2 - Weapons	41 - 42
Chapter 3 - Avionics	43 - 54
Chapter 6 - Survival Equipment	55 - 60
Chapter 7 - Non-destructive Testing	61 - 64
Chapter 8 - Painter and Finisher	65 - 70

E01234 ( )

Figure 4 Example of a Topic 5A3 list of chapters page

MECHANICAL

MAINTENANCE PROCEDURES
COMPONENT REPLACEMENTS
AIRCRAFT NAME

AP Code-5A3
Sect 1
Chap 4

LIST OF CONTENTS

	MP Nos.
Engine Removal	21
Engine Fitting	22
Propeller Removal	23
Propeller Fitting	24
Engine Cylinder Assembly Removal	25
Engine Cylinder Assembly Fitting	26
Engine Cylinder Head Removal	27
Engine Cylinder Head Fitting	28
Top Cover Removal	29
Top Cover Fitting	30
Engine Starter Adapter Clearance	31
Engine Starter Fitting	32
Not Issued	33
Throttle Linkage Guide Cage at Engine Bulkhead Replacement	34
Not Issued	35 - 50

E01234 ( )

Figure 5 Example of a Topic 5A3 list of contents page

MECHANICAL MP21(1) (1 to 6) ENGINE REMOVAL	MAINTENANCE PROCEDURES COMPONENT REPLACEMENTS AIRCRAFT NAME	AP Code-5A3 2nd Edition Sect 1 Chap 4	Maintenance Record Aircraft or Equipment Serial No:			MOF Form707MS (Revised Jan 01) Date:	
INFORMATION IN THE TOPIC 5A2 IS TO BE CONSULTED THROUGHOUT THE WORK DETAILED ON THIS CARD			Tradesman		Brief details of Suspected fault(s} and SNOW(s}	Supervisor	
Associated Procedures MP23, MP90, MP331		Code	Man Hrs	Certification and TDM		Man Hrs	Certification and TDM
Special Tools and Equipment Engine Sling, 4GC/4232148							
BLOCK 1	Mech(Prop)						
1.	Preparation						
1.1	Cowling (5 off).	Remove.					
1.2	Spark plug (8 off).	Remove.					
1.3	Propeller.	Remove (MP23).					
WARNING							
	OIL OMD-370 IS A HAZARDOUS SUBSTANCE.						
1.4	Engine oil tank.	Drain.					
1.5	Fuel cock.	Make sure that it is selected to 'OFF'.					
WARNING							
	FUEL AVGAS IS A HAZARDOUS SUBSTANCE.						
1.6	Carburettor.	Drain.					
1.7 1.8	Throttle control.) Mixture control.)	Disconnect at engine layshaft.					
E0004MW(18)		Continued					

Figure 6 Example of a Topic 5A3 MP work card

CHAPTER 7-0

AIRCRAFT TOPIC 5A5 MAINTENANCE PROCEDURES SUBJECT TO SPECIAL APPROVAL

CONTENTS

Para

1 Introduction

INTRODUCTION

1 Maintenance Procedures (MPs) which are subject to special approval were produced in accordance with JSP 372, Approvals Procedures for Publications Associated with Nuclear Weapons and published under the cover of Topic 5A5. However, the requirement for such procedures does not presently exist and the Topic 5A5 has been withdrawn from use.

CHAPTER 8-0

AIRCRAFT TOPIC 5A6 WEAPON LOADING/OFF-LOADING PROCEDURES

CONTENTS

Para

1 Introduction
3 Layout
6 Numbering of procedures
7 Numbering of sheets
8 Heading information
9 Associated procedures and manpower requirements
10 Reference to Topic 5A2
11 Work content
12 Presentation examples

Figure

1 Example 1 of a Topic 5A6 page 3
2 Example 2 of a Topic 5A6 page 4
3 Example 3 of a Topic 5A6 page 5
4 Example 4 of a Topic 5A6 page 6
5 Example 5 of a Topic 5A6 page 7
6 Example 6 of a Topic 5A6 page 8

INTRODUCTION

1 Weapon Loading/Off-Loading Procedures contain all the information necessary for the preparation of weapon stations and the loading and off-loading of all approved armament stores.

2 Every loading procedure is self-contained except for the following material:

2.1 Repetitive pre and post loading/off-loading operations which appear as sub-procedures; eg, aircraft preparation may be referred out as associated procedures from main procedures within the same topic 5A6.

LAYOUT

3 The Topic 5A6 includes an introduction and a list of parts and sections in the preliminary pages. Each part of the Topic 5A6 represents a particular weapon system. The first page of each section is a list of the chapters within the section.

4 Section 1 contains chapters of general information, which will vary depending on the weapon capability of the aircraft, The following list provides examples of the chapter topics that may be found in Section 1:

4.1 General Information.

4.2 Tool and equipment lists.

4.3 Bomb bay, fuzing wire and ERU preparation tables.

4.4 Missile launcher stations.

Further information of a general nature may be added as extra chapters.

5 Section 2 contains Loading and off-loading procedures as follows:

5.1.1 Chapter 1 - Pre loading operations.

5.1.2 Chapter 2 - Store loading.

5.1.3 Chapter 3 - Post loading operations.

5.1.4 Chapter 4 - Pre off-loading operations (include all misfire procedures).

5.1.5 Chapter 5 - Store off-loading.

5.1.6 Chapter 6 - Post off-loading operations.

5.1.7 Chapter 7 - Weapon/store reloading.

5.1.8 Chapter 8 - Weapon/store emergency drill.

Numbering of procedures

6 Authors are to allocate a series of procedure numbers for use within the chapters of Section 2. The allocation of procedure numbers should be sufficient to allow for possible future requirements. Procedures which are directly related are to bear the same number with a suffix letter to indicate the type of procedure. Suffix 'A' denotes pre loading, loading or post loading operations and suffix 'B' denotes pre off-loading, off-loading and post off-loading operations for the same stores.

Numbering of sheets

7 The sheet number is indicated by a number in brackets appearing after the procedure number. The total number of sheets contained in the procedure is indicated in brackets on the first sheet immediately below the procedure number.

Heading information

8 Heading information is to appear on all front sheets and may be produced at the bottom of the page if a tumble page format is used.

Associated procedures and manpower requirements

9 Associated procedures and manpower requirements are listed in the blocks provided on the first sheet of the procedure.

Reference to Topic 5A2

10 A reference to the Topic 5A2 is to be printed in red on the front cover immediately below the title. The wording of the reference is to be as follows:

'Hazard Information contained in the Topic 5A2 is to be consulted during the work detailed in this schedule'.

Work Content

11 The work content of procedures is to be written as items and operations wherever practicable.

Presentation examples

12 Examples of Topic 5A6 pages are presented in Figures 1 to 6 inclusively.

Sheet 1 WEAPON LOADING/OFF-LOADING PROCEDURES AP Code No. -5A6
GENERAL 3rd Edition
GENERAL INFORMATION Sect 1
AIRCRAFT NAME Chap 1

1. The NCO IC loading/off-loading must make sure that, before the loading/off-loading procedure starts, a Thunderstorm State or a Thunderstorm Risk has not been declared by the Metrological Officer. The terms Thunderstorm State and Thunderstorm Risk are defined as follows:

a. Thunderstorm State. This will only be used in locations at which there is a forecaster on duty. There is a high degree of confidence in this term.

b. Thunderstorm Risk. This will only be used in relation to the occurrence of thunderstorms affecting areas or remote sites. A remote site is defined as a site without a forecaster on duty.

2. The terms Thunderstorm State 1 (HIGH) and Thunderstorm Risk 1 (HIGH) are defined as follows:

a. Thunderstorm State 1 (HIGH). This indicates that a thunderstorm is occurring or is expected over the site in the immediate future (normally within the next 15 minutes).

b. Thunderstorm Risk 1 (HIGH). This indicates that thunderstorms will develop or have developed in the area.

3. If the Thunderstorm State or a Thunderstorm Risk is 1 (HIGH), you must obey the safety precautions that follow:

a. Missile Handling. All loading/of-loading procedures are to stop. If missiles are going to or from the aircraft, take them immediately to the missile storage area.

b. Missiles on Aircraft.

(i) On the ground. All personnel must leave the aircraft and all external power supplies must be disconnected.

(ii) Before Landing. The Aircraft Commander will be advised of the Thunderstorm State or Condition. After landing he will be instructed to position the aircraft in a preselected area, make it safe and shut-down. All personnel are to be removed from this area. The handling of the missiles is not permitted.

EXXXXXX (X) Continued

Figure 1 Example 1 of a Topic 5A6 page

Sheet 1 (Contd)

4. Missile malfunctions are defined in Ammunition and Explosives Regulations (Land Service) PAM 60 Part 3 Glossary as:

Misfire	The failure to initiate the launch motor on completion of the firing sequence.
Hangfire	An abnormal delay in initiation of a launch motor.
Hang-up	The unintentional retention on the launcher of a missile after the launch motor has ignited and burned to extinction. (Flight motor not initiated).

EXXXXXX (XX)

Figure 2 Example 2 of a Topic 5A6 page

Sheet 1	WEAPON LOADING/OFF-LOADING PROCEDURES GENERAL TOOLS AND EQUIPMENT LISTS AIRCRAFT NAME	AP Code No. -5A6 3rd Edition Sect 1 Chap 2

SECT/REF	DESCRIPTION	QTY	1	2	3	4
Local Manufacture	Aircraft Armed Notice Large	2	X	X	X	X
5120-99-8462125	Torque Driver Kit (Magazine)	1	X	X	X	X
4920-99-4647063	Zero Volts Test Set (In plastic case)	1	X	X	X	X
Pt No. 2352-3A	Zero Volts Test Adapter (Stbd)	1	X	X	X	X
Pt No. 2352-3B	Zero Volts Test Adapter (Port)	1	X	X	X	X

EXXXXXX (X)

Figure 3 Example 3 of a Topic 5A6 page

Sheet 1 WEAPON LOADING/OFF-LOADING PROCEDURES AP Code No. -5A6
GENERAL 3rd Edition
AIRCRAFT ARMED STATES Sect 1
AIRCRAFT NAME Chap 3

AIRCRAFT ARMED STATES

This table shows the position of armament safety devices for different armed states.

Do not move the armament safety devices to the combat armed position unless you are told to by the aircraft captain.

Do not move armament safety devices to other armed states unless:

- You are certified as competent (As required in ►MAP-01 Chapter 14.7◄).

AND

- You have been told to by the NCO IC the loading/off-loading team or the NCO IC Flight Servicing.

TABLE 1

Aircraft/ Store	Safety Device	Position	Initially Armed	Finally Armed	Combat Armed
Aircraft Weapon System	Master Armament Safety Switch Key	Removed	X	X	
		Fitted			X
	ERU Safety Pins	Fitted	X	X	
		Removed			X
Practice Bombs 14 kg	Safety Pin	Fitted	X		
		Removed		X	X
Practice Bombs 3kg	Safety Pin	Fitted	X		
		Removed		X	X
AN/ALE 40	Filter Safety Pin	Fitted	X	X	
		Removed			X

EXXXXXX (X)

Figure 4 Example 4 of a Topic 5A6 page

LP1A(1) (1 to 3)	WEAPON LOADING AND OFF-LOADING PROCEDURES LOADING PROCEDURES PRE-LOADING OPERATIONS AIRCRAFT NAME	AP Code No. -5A6 XX Edition Sect 2 Chap 1

AIRCRAFT - PREPARATION

ASSOCIATED PROCEDURE CARDS	MANPOWER REQUIREMENT
	NCO Eng Tech W

1. Aircraft - Preparation

1.1	Aircraft.	(i) Make sure that it is positioned in designated arming area. (ii) Make sure it is pointing in a safe direction.
1.2	'Aircraft Armed' notice, large (2 off).	Display at front and rear of aircraft.
1.3	External electrical power supply.	(i) Make sure that it is switched off. (ii) Make sure that it is disconnected.
1.4	Earthing cable.	Make sure that it is fitted.

Sub-items 1.5 to 1.7 inclusive are applicable only to stations loaded.

EXXXXX(7) Continued

Figure 5 Example 5 of a Topic 5A6 page

```
1.      Aircraft - Preparation (Contd)

 1.5    Pylon ERU ground         )
        safety lock pins.        )
 1.6    SEERU safety pin         )
        (If applicable).         )    Make sure that they are
 1.7    Sidewinder LAU 7A        )    fitted.
        launcher (2 off)         )
        detent wrench/safety     )
        pin.                     )


1.8     BOZ 107 flare safety          Make sure that it is
        unit safety pin.              fitted.

1.9     Loaded Weapons/Stores.        Make sure that it is set to
                                      'Initially Armed'
                                      (Sect 1 Chap 4).

1.10    Fault annunciator             Make sure that they
        (12 off).                     indicate black.

1.11    Butt switch.                  Make sure it is set to
                                      'NORMAL'.

        Sub-item 1.12 is applicable only to Pre Mod 1422 and
        1456 aircraft.

1.12    Logic supply
        circuit-breakers.
        (a) CB 166.              )    Make sure that they are
        (b) CB 402.              )    open.

        Sub-item 1.13 is applicable only to TIALD capable
        aircraft.

1.13    TIALD supply
        circuit-breakers.
        (a) CB 93.               )    Make sure that they are
        (b) CB 145.              )    open.

1.14    Right rear gun bay            (i)   Open.
        access door.                  (ii)  Secure.


EXXXXX(7A)                                              Continued
```

Figure 6 Example 6 of a Topic 5A6 page

CHAPTER 9-0

AIRCRAFT TOPIC 5A7 WEAPON LOADING/OFF-LOADING PROCEDURES SUBJECT TO SPECIAL APPROVAL

CONTENTS

Para

1 Introduction

INTRODUCTION

1 Weapon loading/off-loading procedures which are subject to special approval were produced in accordance with JSP 372, Approvals Procedures for Publications Associated with Nuclear Weapons and published under the cover of Topic 5A7. However, the requirement for such procedures does not presently exist and the Topic 5A7 has been withdrawn from use.

CHAPTER 10-0

AIRCRAFT FLIGHT SERVICING - GENERAL

CONTENTS

Para

1 Introduction
2 Types of flight servicing
4 Continuous operations
5 Operational Re-arm (ORA) servicing
6 Operational Readiness Servicing (ORS)

INTRODUCTION

1 Flight servicing comprises those preventive maintenance activities required to determine the condition of an aircraft prior to, or on completion of, a period of flying. The replenishment of consumables, such as oils, gases and domestics, are flight servicing activities and are included in the relevant Flight Servicing Schedule (FSS).

TYPES OF FLIGHT SERVICING

2 There are 3 basic regimes of aircraft flight servicing:

2.1 A regime comprising After Flight (AF), Before Flight (BF) and Turn Round (TR) servicings.

2.2 A regime comprising Daily Flight Servicing (DFS) and Technical Flight Servicing (TFS).

2.3 A regime comprising Daily Servicing and Replenishment Servicing.

Aircraft flight servicing regimes are promulgated in Topics 5B1, Flight Servicing Schedules, as described in Chapter 10-1.

3 Flight servicing schedules may also be produced for the role equipment fitted to certain multi-role aircraft types. These schedules are promulgated as Topics 5B1C, Flight Servicing Schedules (Role Equipment), as described in Chapter 10-3.

CONTINUOUS OPERATIONS

4 The concept of operations for some aircraft types demands that they land, stop their engine(s), change crews, possibly refuel, restart engine(s) and take off again in order to complete a particular mission. The Topic 5B1A Continuous Operation Mandatory Maintenance (COMM) schedule is used to promulgate those preventive maintenance activities that are to be done between flights during periods of continuous operation. The presentation of a Topic 5B1A is described in Chapter 10-2.

OPERATIONAL RE-ARM (ORA) SERVICING

5 An ORA servicing combines elements of the FSS, as applicable, with refuelling and the loading of weapons and/or external stores, as required. The Topic 5T Operational Turn Round Schedule is used to promulgate an ORA servicing as described in Chapter 17-0.

OPERATIONAL READINESS SERVICING (ORS)

6 An Operational Readiness Servicing (ORS) regime may be used when an aircraft undergoes a sustained period of operational standby. An ORS schedule is a substitute for the aircraft's basic FSS and comprises the preventive maintenance and weapon loading/off-loading activities if applicable, necessary to maintain an aircraft in a state of continuous operational readiness in accordance with ►MAP-01 Chapter 2.8◄. The presentation of ORS schedules is described in Chapters 18-0 to 18-3 inclusively.

CHAPTER 10-1

TOPIC 5B1 FLIGHT SERVICING SCHEDULE

CONTENTS

Para

1 Introduction
5 Preliminary pages
5 Front cover
6 Amendment record
7 Record of Advance Information Leaflet (AIL) and Service Amendments Leaflets (SAL)
8 Introduction
9 Health and safety at work
10 List of sections
11 List of chapters
12 List of annexes
13 Format and presentation of work cards
13 Format
14 Single trade aspects
15 Composite trained aspects
16 Topic 5A2 hazard information
18 Work card text
19 Aircraft mark applicability
20 Annexes to flight servicing schedules
21 Trade annotation in annexes
22 Work card examples

Figure Page

1 Example 1 of a Topic 5B1 introduction page (recto) 5
2 Example 2 of a Topic 5B1 introduction page (recto) 6
3 Example of a Topic 5B1 introduction page (verso) 7
4 Example of a Topic 5B1 health and safety at work page 8
5 Example 1 of a Topic 5B1 list of sections page 9
6 Example 2 of a Topic 5B1 list of sections page 10
7 Example 1 of a Topic 5B1 list of chapters page 11
8 Example 2 of a Topic 5B1 list of chapters page 12
9 Example 3 of a Topic 5B1 list of chapters page 13
10 Example 1 of a Topic 5B1 list of annexes page 14
11 Example 2 of a Topic 5B1 list of annexes page 15
12 Example 3 of a Topic 5B1 list of annexes page 16
13 Example of a Topic 5B1 section/chapter work card 17
14 Example of a Topic 5B1 annex work card (recto) 18
15 Example of a Topic 5B1 annex work card (verso) 19

INTRODUCTION

1 The Topic 5B1 Flight Servicing Schedule (FSS) is a self contained set of work cards detailing all flight servicing operations and can be produced using one of three systems as follows:

1.1 The Before Flight (B/F), Turn Round (T/R) and After Flight (A/F) System consisting of:

1.1.1 B/F servicing.

1.1.2 T/R servicing.

1.1.3 A/F servicing.

1.1.4 Annexes (as required).

1.2 The Daily Flight Servicing (DFS) and Technical Flight Servicing (TFS) System consisting of:

1.2.1 DFS.

1.2.2 TFS

1.2.3 Annexes (as required).

1.3 The Daily Servicing and Replenishment Servicing System consisting of:

1.3.1 Daily.

1.3.2 Replenishment.

1.3.3 Annexes (as required).

2 Essential Check (E/C) and Post Taxi Recovery (PTR) servicings may be used in conjunction with any system.

3 The content of the Topic 5B1 is derived from the MML and is based on the flight servicings detailed in ►MAP-01 Chapters 2.8 and 5.3◄. Schedules are proved on aircraft prior to final printing and issue.

4 The Topic 5B1 consists of a series of preliminary pages followed by a List of Sections. The leading page of each section consists of a List of Chapters contained in the associated section. If the FSS contains any Annexes, then these are preceded by a List of Annexes. Each chapter and annex details the activities to be done and these activities are promulgated in the form of area based work cards presented for use by either single trade or composite trained personnel.

PRELIMINARY PAGES

Front cover

5 The front cover forms the title page of the Topic 5B1 as explained in Chapter 2. Examples of front covers are presented in Chapter 2-0, Figures 1 to 3.

Amendment record

6 The Amendment Record is a common preliminary page as described in Chapter 2. An example A5 size Amendment Record is presented in Chapter 2-0, Figures 6 and 7.

Record of Advance Information Leaflets (AIL) and Service Amendment Leaflets (SAL)

7 The Record of AILs and SALs is a common preliminary page as described in Chapter 2. An example A5 size Record of AILs and SALs is shown in Chapter 2-0, Figures 10 and 11.

Introduction

8 Examples of Topic 5B1 Introduction pages are shown in Figures 1 to 3.

Health and safety at work

9 An example of a Topic 5B1 Health and Safety at Work pages is shown in Figure 4.

LIST OF SECTIONS

10 The List of Sections is based on the applicable FSS system and includes sections related to PTR servicing and EC servicing as required. If the FSS contains any Annexes, then a reference to Annexes is also included in the list. Examples of a Topic 5B1 List of Sections page are shown in Figure 5 and Figure 6.

LIST OF CHAPTERS

11 Examples of a Topic 5B1 List of Chapters page are shown in Figures 7 to 9.

LIST OF ANNEXES

12 An example of a Topic 5B1 List of Annexes page is shown in Figures 10 to 12.

FORMAT AND PRESENTATION OF WORK CARDS

Format

13 FSS work cards are written in an area based trade annotated format. This format presents the work by physical areas and, as far as possible, in a walk-round sequence. The part of the aircraft covered by each block on the work card is displayed in upper case text as a centre heading. This format has been devised to allow for use by both single trade and composite trained personnel.

Single trade aspects

14 Chapters dedicated to single trade personnel follow the multi trade based chapters. The associated work card header blocks are annotated at the top left with the trade identified in full, in upper case form. There is no requirement to identify the individual blocks of the work cards by trade.

Composite trained aspects

15 The schedules for composite trained personnel are written for use by engineering trades personnel who have been trained to do composite flight servicing tasks in accordance with ►MAP-01 Chapter 2.8◄. Sections are sub-divided into chapters and annotated 'MAN A', 'MAN B' etc. In determining the number of men and therefore the number of chapters required the PT will consider the size, role and complexity of the aircraft and establishment of user units. For ease of use by single trade personnel, each work block is annotated in the upper left corner with the abbreviated description of the basic trade responsible for doing the work.

Topic 5A2 hazard information

16 A standard entry, contained within the work card header, is to direct the user of the schedule to the information contained in the aircraft Topic 5A2.

17 When an operation detailed within the schedule is hazardous, a suitable warning or caution is to be entered immediately prior to that operation.

Work card text

18 The descriptions of the SIN and item shown on the work card are to be the same as in the MML; however, operation entries should be expanded as necessary to make them as easy to understand as possible.

Aircraft mark applicability

19 Mark applicability of individual blocks of work is indicated as part of the centre heading of each block, following the work area location. The mark appears in brackets and in upper case abbreviated form eg (GR1), (HC2), (K3). Mark applicability for individual SINs is indicated by the statement 'SIN xxxxxxx is applicable only to Mk xx aircraft'.

Annexes to flight servicing schedules

20 Annexes contain work cards that detail the maintenance procedures necessary to support flight servicing activities. They form the final series of work cards in the Topic 5B1. Cross-references to the relevant annexes appear in the text of the work cards in brackets below the operation. Annexes are normally identified by consecutive letters, but consecutive numbers may be used for large lists of annexes, if this is considered more appropriate. Where relevant, annexes are cross-referred to the original procedure.

Trade annotation in annexes

21 When an annex involves more than one trade it is to be allocated to the trade responsible for the major portion of the work. Each block on the work cards is annotated with the trade concerned.

Work card examples

22 An example of a section/chapter work card is shown in Figure 13.

23 An example of an annex work card is shown in Figures 14 and 15.

FLIGHT SERVICINGS AIRCRAFT NAME — AP Code-5B1

INTRODUCTION

1 Contents. This Topic 5B1 contains a series of work cards. Section 1, the 'Daily Flight Servicing', is 'Area Based, Composite'. This section is for technicians and aircrew who are authorized to do Flight Servicings as given in ►MAP-01 Chapters 4.3, 4.7, 5.4 & 7.2◄. Section 2, the 'Technical Flight Servicing' is 'Area Based, Trade Based'. This section is only for technicians who are authorized to do Flight Servicings as given in ►MAP-01 Chapters 4.3, 4.7, 5.4 & 7.2◄.

2 Relationship. The relationship between this Topic 5B1 and other Topics in the series is explained in the introduction to the Topic 5A1 (Master Maintenance Schedule).

3 Hazard and Maintenance Information. The Special Instructions contained in this topic are in addition to, and are to be read in conjunction with, the aircraft Hazard and Maintenance Information contained in the Topic 5A2.

4 Arrangement. The servicing operations have been grouped into work areas and are presented as far as possible in a walk round sequence.

5 Schedule Identification Numbers (SINs). Details of how SINs can be used to give direct reference to relevant chapters and sub-chapters of the Aircraft Maintenance Manual are contained in the introduction to the Topic 5A1.

E1234(3) — Page (vii)/(viii)

Figure 1 Example 1 of a Topic 5B1 introduction page (recto)

FLIGHT SERVICINGS AIRCRAFT NAME — AP Code-5B1

INTRODUCTION

1 Contents. This Topic 5B1 contains a series of work cards produced in an area based trade annotated format for issue to single skilled ground trade personnel responsible for Before Flight, Turn Round and After Flight Servicings. Certain operations to be done only by single skilled ground trade personnel are contained on separate work cards.

2 Relationship. The relationship between this Topic 5B1 and other Topics in the series is explained in the introduction to the Topic 5A1 (Master Maintenance Schedule).

3 Hazard and Maintenance Information. The Special Instructions contained in this topic are in addition to, and are to be read in conjunction with, the aircraft Hazard and Maintenance Information contained in the Topic 5A2.

4 Arrangement. The servicing operations have been grouped into work areas and are presented as far as possible in a walk round sequence.

5 Schedule Identification Numbers (SINs). Details of how SINs can be used to give direct reference to relevant chapters and sub-chapters of the Aircraft Maintenance Manual are contained in the introduction to the Topic 5A1.

E1234(3) Page (vii)

Figure 2 Example 2 of a Topic 5B1 introduction page (recto)

AP Code-5B1

6 Trade Abbreviations. The following trade abbreviations are used in this schedule:

Ac - Aircraft Technician

Av - Avionic Technician

7 Annexes. When there is a requirement to support flight servicings by replenishment and/or complicated procedures they are included in the form of Annexes which are located at the back of this Topic.

8 Amendments. New or amended matter will be indicated by vertical lines in the right hand margin (tumble format) or outer margin (back to back format) showing the extent of the amendment. Amendment procedure is detailed in ▶MAP-01 Chapter 8.2◀.

AUTHORS NOTE: Trade abbreviations should reflect specific Service applicability (See Chapter 1-4 Para 6).

E1234(3A) Page (viii)

Figure 3 Example of a Topic 5B1 introduction page (verso)

FLIGHT SERVICINGS AIRCRAFT NAME — AP Code-5B1

INTRODUCTION

HEALTH AND SAFETY AT WORK

The Health and Safety at Work etc. Act 1974 (HSWA) requires you to:

- Take reasonable care for the health and safety of yourself and other persons who may be affected by your actions or omissions at work.
- Co-operate with your supervisors and any other persons to enable them to comply with any safety and legal requirements.
- Not intentionally or recklessly interfere with or misuse anything supplied in the interest of health, safety or welfare.

JSP 375 - HEALTH AND SAFETY HANDBOOK

JSP 375 provides instruction and guidance on the policy, top-level organisation and arrangements by which the Ministry of Defence ensures the maintenance of acceptable standards of Health and Safety (H&S) throughout the organisation. Both the Health and Safety at Work Etc Act 1974 and the Secretary of State's H&S policy apply to all members of HM Forces and MOD civilian employees and to all activities done under the control of the Secretary of State for Defence.

All line managers and employees must comply with:

- The guidance and requirements of JSP 375.
- All local promulgated orders and procedures.
- All risk mitigation measures and safety requirements assessed and associated with any work activity done on this aircraft and equipment.

E1234(4) — Page (ix)/(x)

Figure 4 Example of a Topic 5B1 health and safety at work page

FLIGHT SERVICINGS AIRCRAFT NAME — AP Code-5B1

LIST OF SECTIONS

Section 1 - Daily Flight Servicing

Section 2 - Technical Flight Servicing

Annexes

E1234(5)

Figure 5 Example 1 of a Topic 5B1 list of sections page

FLIGHT SERVICINGS AIRCRAFT NAME — AP Code-5B1

LIST OF SECTIONS

Section 1 - Before Flight Servicing

Section 2 - Turn Round Servicing

Section 3 - After Flight Servicing

Section 4 - Post Taxi Recovery Servicing

Section 5 - Essential Check Servicing

Annexes

E1234(5)

Figure 6 Example 2 of a Topic 5B1 list of sections page

BEFORE FLIGHT SERVICINGS
AIRCRAFT NAME

AP Code-5B1

LIST OF CHAPTERS

	Card No.	No. of Cards
Chapter 1 - MAN A	1-3	3
Chapter 2 - MAN B	1-4	4
Chapter 3 - WEAPONS	1-2	2

LIST OF CARDS APPLICABLE TO EACH TRADE WHEN THE SCHEDULE IS USED AS A TRADE BASED SERVICING.

TRADE	CHAP 1	CHAP 2	CHAP 3
Mech(AF)	1, 2, 3	1, 2, 3, 4	Nil
Wpns	1, 2	Nil	1, 2
Av(Elect)	3	1, 2, 4	Nil
Mech(Prop)	2	2, 3, 4	Nil
Av(AV)	2, 3	2	Nil

AUTHORS NOTE: Trade abbreviations should reflect specific Service applicability (See Chapter 1-4 Para 6).

E0167(5)

Figure 7 Example 1 of a Topic 5B1 list of chapters page

DAILY FLIGHT SERVICING
AIRCRAFT NAME

AP Code-5B1

LIST OF CHAPTERS

	Card No.	No. of Cards
Chapter 1	1 - 6	6

LIST OF CARDS APPLICABLE TO EACH TRADE WHEN THE SCHEDULE IS USED AS A TRADE BASED SERVICING.

TRADE	CARD NO.
Ac	1, 2, 3, 4, 5, 6
Av	1, 4, 5, 6

E0167(5)

Figure 8 Example 2 of a Topic 5B1 list of chapters page

TECHNICAL FLIGHT SERVICING AIRCRAFT NAME — AP Code-5B1

LIST OF CHAPTERS

	Card No.	No. of Cards
Chapter 1 - Ac	1 - 16	16
Chapter 2 - Av	1 - 9	9

E1234(5)

Figure 9 Example 3 of a Topic 5B1 list of chapters page

FLIGHT SERVICINGS AIRCRAFT NAME — AP Code-5B1

LIST OF ANNEXES

		No. of Cards
Annex A	Infrared External Lights - Test	5
Annex B	Lag Plane Damper - Indicator ..... Gap Check	1
Annex C	Station Keeping Lights - Test	3
Annex D	Rotor Overspeed Audio Warning ..... System (ROAWS) -Interrogation Procedure	1
Annex E	Engine Oil System - Replenishment	2

E0014MW(62)

Figure 10 Example 1 of a Topic 5B1 list of annexes page

FLIGHTAP Code-5B1
SERVICINGS
AIRCRAFT NAME

LIST OF ANNEXES

			Card No.	No. of Cards
Annex 1	-	Pressure Refuelling	1-4	4
Annex 2	-	Nose and Main Wheel Tyre Pressure Checks	1-2	2
Annex 3	-	FLIR Window Cleaning	1-2	2
Annex 4	-	LOX Converter Contents Check/Replacement	1-3	3
Annex 5	-	Raptor Pod Purging	1	1
Annex 6	-	VICON Pod Servicing	1-6	6
Annex 7	-	Hydraulic Reservoir Contents Check	1	1
Annex 8	-	Secondary Power System Oil Contents Check/Replenishment	1-2	2
Annex 9	-	Power Plant Oil System Replenishment	1-6	6
Annex 10	-	Nitrogen Replenishment Of The Fin Fuel Inerting System (Activated System Only)	1-2	2
Annex 11	-	Canopy Bracket Alignment Check	1	1
Annex 12	-	Ejection Seat Harness Restraint Line Stowage And PEC Dust Cover Check	1	1

E1234(86) Continued

Figure 11 Example 2 of a Topic 5B1 list of annexes page

AP Code-5B1

			Card No.	No. of Cards
Annex 13	-	Probe Nozzle Sliding Sleeve Force Check	1	1
Annex 14	-	LDERU After Firing Servicing	1-2	2
Annex 15	-	HDERU After Firing Servicing	1	1
Annex 16	-	CBLS 200 After Firing Servicing.	1	1
Annex 17	-	LAU7A/BOL 304A Launcher Coolant Bottle Content Check/Replacement	1-4	4
Annex 18	-	LAU7A/BOL 304A Launcher After Firing Servicing	1-2	2
Annex 19	-	Paveway II and Enhanced Paveway II Post Flight Checks.	1-3	3
Annex 20	-	Paveway III and Enhanced Paveway III Post Flight Checks.	1-4	4
Annex 21	-	1000lb Bombs with No.114 Mk 7 Tail Units Post Flight Checks.	1	1
Annex 22	-	Mauser Gun and Barrel After Firing Servicing	1-3	3
Annex 23	-	Mauser Gun Barrel Gauging	1-4	4

E1234(86A) Continued

Figure 12 Example 3 of a Topic 5B1 list of annexes page

Trade or ‘MAN A’, ‘MAN B’ etc, as required

Type of Servicing eg BEFORE FLIGHT

```
XXXXXX                    XXXXXXXXX                AP Code-5B1
Card 1                     SERVICING                    Sect 1
                        AIRCRAFT NAME                   Chap 1
```

INFORMATION IN THE TOPIC 5A2 IS TO BE CONSULTED THROUGHOUT THE WORK DETAILED ON THIS CARD

```
AF                            GENERAL

          External areas include all probes, aerials,
          intakes, exhaust ducts, pylons and any fuel
          tanks, ECM pods or chaff/flare dispensers
          fitted to pylons.

0700001   Aircraft external          Look for damage and signs
          lower surface areas.       of leaks.

0700002   Aircraft.                  Make sure that attitude
                                     appears normal.

AF                        FRONT COCKPIT

7232002   Pilots display unit        Make sure that they are
          optical surfaces.          clean.

7232004   Pilots display             Make sure that it is
          unit protective            fitted.
          cover.

          SIN 7233001 is applicable only to Mk 1, 1A and 1B
          aircraft.

7233001   RPMD optical               Make sure that it is
          surface.                   clean.

          SIN 7236001 is applicable only to Mk 4 and 4A
          aircraft.

7236001   PMFD optical               Make sure that it is
          surface.                   clean.

EXXXX (  )                                          Continued
```

Figure 13 Example of a Topic 5B1 section/chapter work card

AIRFRAME	FLIGHT SERVICINGS	AP Code-5B1
Card 1	AIRCRAFT NAME	Annex C

LOX CONVERTER REPLACEMENT

INFORMATION IN THE TOPIC 5A2 IS TO BE CONSULTED THROUGHOUT THE WORK DETAILED ON THIS CARD

Special Tools and Equipment:
Face Mask 22G/1227504
Apron 22G/1253405
Gauntlet (S) 22G/1323062
Gauntlet (M) 22G/1323063
Gauntlet (L) 22G/1323064

BLOCK 1 AIRFRAME

1. Preparation

1.1	Circuit-breaker 353.	Open.
1.2	Oxygen combined services unit (2 off).	Make sure that they are set to 'OFF'.

BLOCK 2 AIRFRAME

2. Removal

2.1	Door L147.	Open.
	During Sub-item 2.2 the supply pipe is not to be bent to a radius smaller than 76.2 mm (3 in.).	
2.2	Supply connection.	Disconnect.
2.3	Electrical connector.	(i) Disconnect. (ii) Stow.
2.4	T-bolt safety pin.	Remove.
2.5	T-bolt.	Release.
2.6	Vent connector.	Disconnect.
2.7	LOX converter.	Remove.

EXXXX( ) Continued

Figure 14 Example of a Topic 5B1 annex work card (recto)

AP Code-5B1

BLOCK 3 AIRFRAME

3. Installation

3.1	Converter base plate securing point heel.	Make sure that it is clean.
3.2	LOX converter.	Install.
3.3	Vent connector.	Connect again.
3.4	T-bolt.	(i) Position. (ii) Tighten, making sure that bonding lug is correctly positioned.
3.5	T-bolt safety pin.	Install again.
3.6	Electrical connector.	Connect again.

During Sub-item 3.7 the supply pipe is not to be bent to a radius smaller than 76.2 mm (3 in.).

3.7	Supply connection.	Connect again.

BLOCK 4 AIRFRAME

4. Completion

4.1	Circuit-breaker 353.	Close.
4.2	Doors R230 and R231.	Open.
4.3	Ground service fuel panel battery switch.	Set to 'ON'.
4.4	LOX converter contents gauge.	Make sure that it is indicating 'FULL'.

EXXXX( ) Continued

Figure 15 Example of a Topic 5B1 annex work card (verso)

CHAPTER 10-2

TOPIC 5B1A CONTINUOUS CHARGE MAINTENANCE

CONTENTS

Para

1 Introduction
3 Format and presentation
4 Work card example

Figure Page

1 Example of a Topic 5B1A section/chapter work card (recto) 2
2 Example of a Topic 5B1A section/chapter work card (verso) 3

INTRODUCTION

1 Continuous charge maintenance schedules are produced to present those activities of the FSS that are to be done between flights during a period of continuous operation. The policy and requirements of continuous operation are contained in ►MAP-01 Chapters 2.8 and 2.9◄.

2 The content of the Topic 5B1A is decided by the aircraft PT and the limitations relating to its use is to be detailed in the Topic 2(N/A/R)1 for the aircraft.

3 Continuous charge maintenance was previously identified as Continuous Operation Mandatory Maintenance (COMM) and the associated maintenance operations listed in the Topic 5A1 MML were annotated with the code 'COMM'. This code has been retained to identify continuous charge maintenance operations.

FORMAT AND PRESENTATION

4 The format and presentation of Topic 5B1A schedules are virtually the same as that for the Topic 5B1 as described in Chapter 10-1. The one exception is that there is no requirement for a List of Sections, because the only section in the Topic 5B1A is the continuous charge schedule itself.

Work card example

5 An example of a Topic 5B1A chapter work card is shown in Figures 1 and 2.

```
MAN A              CONTINUOUS CHARGE MAINTENANCE      AP Code-5B1A
Card 1                     AIRCRAFT NAME                   Chap 1


   INFORMATION IN THE TOPIC 5A2 IS TO BE CONSULTED THROUGHOUT THE WORK
                          DETAILED ON THIS CARD
Av(AV)                  LOWER FRONT FUSELAGE

7050001     Altimeter antenna        Make sure that they are
            (2 off).                 clean.

Av(Elect)               LEFT FRONT FUSELAGE

2860001     Airstream direction      (i)    Do a freedom of
            detector probe                  rotation check.

                                     (ii)   Look for damage,
                                            misalignment and slot
                                            blockage.

Mech(AF)                LEFT FRONT FUSELAGE

            SIN 2921001 is applicable only if the gun
            has been fired.

2921001     MDC external actuating   Do an 'O' ring retention
            handle.                  check.

Mech(AF)                LEFT FRONT FUSELAGE

WARNING
            WINDSCREEN WASH AL-36 IS A HAZARDOUS SUBSTANCE

2730001     MDC external actuating   Do an 'O' ring retention
            handle.                  check.

9130006     Windscreen wash bottle.  Fill (AL-36).

EXXXX( )                                                Continued
```

Figure 1 Example of a Topic 5B1A chapter work card (recto)

```
AP Code-5B1
Mech(AF)                LEFT FRONT FUSELAGE

2050002      Emergency lowering fire       Do a pressure check
             bottle.                       (200 bar)
                                           (2900 lbf/in2)).

Mech(AF)           NOSE UNDERCARRIAGE COMPARTMENT

0700006      NLG compartment.              Look for damage and
                                           signs of leaks.

2020001      Nose leg assembly (Including  Look for damage and
             drag brace                    signs of leaks.
             and retraction jack).

2020002      Nose wheel and tyre assembly  Look for damage.
             (2 off).

Av(AV)                  LEFT FRONT FUSELAGE

6010002      VHF/UHF transceiver.          Do a pressure check
                                           (276 millibar)
                                           (4lbf/in2)).

Mech(Prop)              LEFT FRONT FUSELAGE

             SIN 4090002 is applicable only if EUMS is fitted.

4090002      Card recorder                 Replace flash card.
             PA3025A (EUMS).

Av(Elect)               LEFT FRONT FUSELAGE

             SIN 0700007 is applicable only if SUMS is fitted.

0700007      Daval 1207 data               Replace cassette
             recorder (SUMS).              tape.

EXXXX( )                                                Continued
```

Figure 2 Example of a Topic 5B1A chapter work card (verso)

CHAPTER 10-3

TOPIC 5B1C FLIGHT SERVICING SCHEDULE (ROLE EQUIPMENT)

CONTENTS

Para

1 Introduction
3 Preliminary pages
4 Front cover
5 Amendment record
6 Record of Advance Information Leaflets (AIL) and Service Amendment Leaflets (SAL)
7 Introduction
8 Health and safety at work notice
9 Standard metric conversion figures table
10 List of chapters
11 List of annexes
12 Format and presentation of work cards
13 Topic 5A2 hazard information
15 Work card examples

Figure		Page
1	Example of a Topic 5B1C contents page	4
2	Example of a Topic 5B1C introduction page (recto)	5
3	Example of a Topic 5B1C introduction page (verso)	6
4	Example of a Topic 5B1C health and safety at work page	7
5	Example of a Topic 5B1C standard metric conversion figures page	8
6	Example of a Topic 5B1C list of chapters page	9
7	Example of a Topic 5B1C list of annexes page	10
8	Example of a Topic 5B1C section/chapter work card	11
9	Example of a Topic 5B1C annex work card	12

INTRODUCTION

1 The Topic 5B1C contains the flight servicing activities to be done on the role equipment fitted to multi-role aircraft types.

2 The Topic 5B1C is produced in an A4 landscape format that consists of a series of preliminary pages followed by a List of Sections. The leading page of each section consists of a List of Chapters contained in the associated section. If the FSS (Role Equipment) contains any Annexes, then these are preceded by a List of Annexes. Each chapter and annex details the activities to be done and these activities are promulgated in the form of area based work cards presented for use by single trade personnel.

PRELIMINARY PAGES

3 The preliminary pages consists of the following constituent elements:

3.1 A front cover.

3.2 An Amendment Record.

3.3 A Record of Advance Information Leaflets (AIL) and Service Amendment Leaflets (SAL).

3.4 A Contents page.

3.5 A Health and Safety at Work Notice.

3.6 A Standard Metric Conversion Figures table.

Front cover

4 The front cover forms the title page of the Topic 5B1C as explained in Chapter 2. Examples of front covers are presented in Chapter 2-0, Figures 1 to 3.

Amendment record

5 The Amendment Record is a common preliminary page as described in Chapter 2. An example landscape A4 Amendment Record is presented in Chapter 2-0, Figures 4 and 5.

Record of Advance Information Leaflets (AIL) and Service Amendment Leaflets (SAL)

6 The Record of AILs and SALs is a common preliminary page as described in Chapter 2. An example landscape A4 Record of AILs and SALs is shown in Chapter 2-0, Figures 10 and 11.

Introduction

7 Examples of Topic 5B1C Introduction pages are shown in Figures 1 to 3.

Health and safety at work notice

8 An example of a Topic 5B1C Health and Safety at Work notice page is shown in Figure 4.

Standard metric conversion figures table

9 The Standard Metric Conversion Figures table lists items of role equipment along with their respective metric and imperial weights. An example of a Topic Standard Metric Conversion Figures table is shown in Figure 5.

LIST OF CHAPTERS

10 A chapter is allocated to each role listed, starting with Chapter 1. To retain the numbering sequence of the list and avoid unnecessary amendment, roles which have been allocated numbers but not procedures are to be annotated as 'Not Issued'. An example of a Topic 5B1C List of Chapters page is shown in Figure 6.

LIST OF ANNEXES

11 An example of a Topic 5B1C List of Annexes page is shown in Figure 7.

FORMAT AND PRESENTATION OF WORK CARDS

12 Role equipment flight servicings are written in a single trade format. Work is presented by physical areas and, as far as possible, in a logical sequence. Work cards present the information in continuous form; ie, not split into 'blocks' as in other work card formats. The trade appears in the top left hand corner of the header block and is written in full, in upper case. The area of the aircraft is shown in the top left hand corner of the work card text area, written using initial capitals and underlined. A four column format is used on the work card as shown in the examples.

Topic 5A2 hazard information

13 A standard entry, contained within each work card header, directs the user of the schedule to the information contained in the aircraft Topic 5A2.

14 When an operation detailed within the schedule is hazardous, a suitable warning or caution is entered immediately prior to that operation.

Work card examples

15 An example of a Topic 5B1C section/chapter work card is shown in Figure 8.

16 An example of a Topic 5B1C annex work card is shown in Figure 9.

FLIGHT SERVICINGS
ROLE EQUIPMENT
AIRCRAFT NAME

AP Code-5B1C
4th Edition

CONTENTS

Preliminary Material — Page

Title Page ..... (i)/(ii)
Amendment Record ..... (iii)/(iv)
Record of Advance Information Leaflets (AIL) ..... (v)/(vi)
Contents (This page) ..... (vii)/(viii)
Introduction ..... (ix) and (x)
Health and safety at work ..... (xi)/(xii)
Standard metric conversion figures ..... (xiii)/(xiv)

Sections

1 Before Flight Servicing
2 Turnround Servicing (Not issued)
3 After Flight Servicing
Annexes

E0491 (3)

Page (vii)/(viii)

Figure 1 Example of Topic 5B1C contents page

FLIGHT SERVICINGS
ROLE EQUIPMENT
AIRCRAFT NAME

AP Code-5B1C
4th Edition

INTRODUCTION

1 This Topic 5B1C contains a series of work cards for the flight servicing of role equipment.

2 This Topic 5B1C is to be used in conjunction with the AMM, AP XXXX-XXXX-5A1 and AP XXXX-XXXX-5A2 which contain information on the following:

AMM - Aircraft Maintenance Manual.

5A1 - Master Maintenance Schedule.

5A2 - Hazard and Maintenance Information.

3 Each item in the Master Maintenance List (MML) is allocated a SIN which identifies the item wherever it appears in the maintenance schedule.

Example: SIN 2550005

25 - System 25 - Equipment/Furnishings

50 - Sub-system 50 - Cargo and Accessory Compartment

The remaining digits 005 identify the item within the sub-system in the schedule. Assistance, preparation and recovery items on work cards are annotated with the SIN of the aircraft system and sub-system applicable to the preparation and recovery item with the last three digits designated '000'.

4 Master and office copies are to be used in book form. Working copies should be prepared as follows:

4.1 Remove from covers.

4.2 Cut off margin and insert in plastic covers or polythene lie-flat tubing as available.

5 Standard metric conversion figures are as shown on Page (xiii)/(xiv).

6 This schedule has been written to include a single and multi-skilled workforce.

E0491 (4)

Page (ix)

Figure 2 Example of a Topic 5B1C introduction page (recto)

AP101B-0701-5B1C
4th Edition

7 The following trade abbreviations are used throughout this schedule:

Mech(AF) - Mechanical (Airframe)

Wpns - Weapons

Av(Elect) - Avionics (Electrical)

Mech(Prop) - Mechanical (Propulsion)

Av(AV) - Avionics (Avionics)

SE - Survival Equipment

NDT - Non-Destructive Testing

Ptr/Fnr - Painter and Finisher

Zonal - Zonal Survey

8 Where single-skilled ground trade personnel are employed, the bracketed abbreviations e.g. (AF) represent single-skilled trades.

9 New or amended matter will be indicated by a vertical line in the left hand margin to show the extent of the amendment. Amendment procedure is detailed in ▶MAP-01 Chapter 8.2◀.

E0491 (4A) Page (x)

Figure 3 Example of a Topic 5B1C introduction page (verso)

FLIGHT SERVICINGS
ROLE EQUIPMENT
AIRCRAFT NAME

AP Code-5B1C
4th Edition

HEALTH AND SAFETY AT WORK

HEALTH AND SAFETY AT WORK

The Health and Safety at Work etc. Act 1974 (HSWA) requires you to:

- Take reasonable care for the health and safety of yourself and other persons who may be affected by your actions or omissions at work.
- Co-operate with your supervisors and any other persons to enable them to comply with any safety and legal requirements.
- Not intentionally or recklessly interfere with or misuse anything supplied in the interest of health, safety or welfare.

JSP 375 - HEALTH AND SAFETY HANDBOOK

JSP 375 provides instruction and guidance on the policy, top-level organisation and arrangements by which the Ministry of Defence ensures the maintenance of acceptable standards of Health and Safety (H&S) throughout the organisation. Both the Health and Safety at Work Etc Act 1974 and the Secretary of State's H&S policy apply to all members of HM Forces and MOD civilian employees and to all activities done under the control of the Secretary of State for Defence.

All line managers and employees must comply with:

- The guidance and requirements of JSP 375.
- All local promulgated orders and procedures.
- All risk mitigation measures and safety requirements assessed and associated with any work activity done on this aircraft and equipment.

E0491 (5)

Page (xi)/(xii)

Figure 4 Example of a Topic 5B1C health and safety at work page

FLIGHT SERVICINGS
ROLE EQUIPMENT
AIRCRAFT NAME

AP Code-5B1C
4th Edition

STANDARD METRIC CONVERSION FIGURES

Item	kg	lb
Load Restraint Device		
Strop (P Type) strength (1 ton)	1015	2240
15 ft HD strop	2250	5000
Lashing fitting, chain, tensioner and floor plug (5K Spike & Butterfly)	2250	5000
Lashing fitting, chain, tensioner and floor plug (10K Spike & Butterfly)	4535	10 000
Lashing fitting, tie-down shackle eye-bolt and floor plug	11 340	25 000
Standard cargo net (Baggage) - Weight of net	18	39.7
Standard cargo net (108 x 88) - Capacity	4535	10 000
Standard cargo net (108 x 88) - Weight of net	56	123.5
NBC	180	400
NBC	45	100
Heavy Duty Winch		
Heavy Duty Winch - Weight	157	346
Heavy Duty Winch - Weight (Plus accessories)	205	452
Heavy Duty Winch - Max load (Single haul)	9070	19 996
Heavy Duty Winch - Max load (Double haul)	18 140	39 992
Heavy Duty Winch - Max cable tension	3400	7496

Standard conversion factors - multiply weight in lb by 0.4536 to determine weight in kg.

E0491 (6)

Page (xiii)/(xiv)

Figure 5 Example of a Topic 5B1C standard metric conversion figures page

Sheet 1

BEFORE FLIGHT
ROLE EQUIPMENT
AIRCRAFT NAME

AP Code-5B1C
4th Edition
Sect 1

LIST OF CHAPTERS

	Role	Card No.	No. of Cards	
Chap 1	1A	1	1	All Stowed.
Chap 2	2A	1-3	3	Miscellaneous Stores, RH and LH Side Door Ejection.
Chap 3	2B	1-3	3	Miscellaneous Stores, LH Side Door Ejection.
Chap 4	2C	1-3	3	Miscellaneous Stores, Cargo Ramp Ejection.
Chap 5	2D	1-4	4	2 Track Roller Conveyor for the Aerial Dispatch of Miscellaneous Stores LH Side Door Ejection.
Chap 6	2E	1-4	4	2 Track Roller Conveyor for the Aerial Dispatch of Miscellaneous Stores LH and RH Side Door Ejection.
Chap 7	2F	1-4	4	4 Track Roller Conveyor for the Aerial Dispatch of Miscellaneous Stores LH and RH Side Door Ejection.
Chap 8	2G			Not Issued.
Chap 9	2H			Not Issued.
Chap 10	3A	1-6	6	Two Medium Stressed Platforms Mk 3 (MSP) Reefed Mains Extraction.
Chap 11	3B	1-6	6	One Medium Stressed Platform Mk 3 (MSP) Reefed Mains Extraction.

E0491 (173)

Figure 6 Example of a Topic 5B1C list of chapters page

FLIGHT SERVICINGS
ROLE EQUIPMENT
AIRCRAFT NAME

AP Code-5B1C
4th Edition

LIST OF ANNEXES

	Card No.	No. of Cards
Annex A - Extra Role Equipment - Stowage	1-7	7
Annex B - Heavy Duty Winch - Operational Checks	1-5	5
Annex C - Parachute Release Units - Electrical And Mechanical Checks	1-3	3
Annex D - Aft End Toilet and Containers - Check For Security	1	1
Annex E - Airborne Modular Oxygen System (AMOS) - Flight Servicing Checks	1-2	2

E0491 (173)

Figure 7 Example of a Topic 5B1C list of annexes page

MECHANICAL (AIRFRAME) Card 1	AFTER FLIGHT ROLE EQUIPMENT AIRCRAFT NAME ROLE 2A	AP Code-5B1C 4th Edition Sect 1 Chap 2

INFORMATION IN THE TOPIC 5A2 IS TO BE CONSULTED THROUGHOUT THE WORK DETAILED ON THIS CARD

Cargo Compartment

2550005	Two man troop seat (5 off).	Forward of wheel well LH	(i)	Look for damage.
2550005	One man troop seat.		(ii)	Make sure that they are secure.
2550005	Two man troop seat (5 off).	Forward of wheel well RH	(i)	Look for damage.
2550005	One man troop seat.		(ii)	Make sure that they are secure.
2550005	Two man troop seat.	Aft of wheel well LH	(i)	Look for damage.
2550005	Two man troop seat (2 off).	Aft of wheel well RH	(ii)	Make sure that they are secure.
			(iii)	Make sure that they are folded.
2550006	Lap strap (LH and RH) (28 off each).	Fitted to sidewall seats	(i)	Make sure that they are secure with locking lever in passengers RH positions. Look for damage.
			(ii)	Look for contamination.
			(iii)	
2550000	Static line anchor cable aft support (2 off).		Lower.	
2550008	Static line anchor cable (4 off).	Attachment points 2, 3, 4 and 5.	(i)	Make sure that they are secure.
			(ii)	Make sure that no strands are broken along entire length of cable.
			(iii)	Make sure that the retrieval spools are secured to forward end of cable with self adhesive black tape.

E0491 (13) Continued

Figure 8 Example of a Topic 5B1C section/chapter work card

MECHANICAL (AIRFRAME) Card 1	AFTER FLIGHT ROLE EQUIPMENT AIRCRAFT NAME	AP Code-5B1C 4th Edition Annex A

EXTRA ROLE EQUIPMENT - STOWAGE

INFORMATION IN THE TOPIC 5A2 IS TO BE CONSULTED THROUGHOUT THE WORK DETAILED ON THIS CARD

The equipment detailed in this annex is to be checked only when it has not been referred to in a specific role fit.

The quantities of the following equipments stowed at a particular location will vary, depending on the specific role fit.

1. Seats and Fittings

1.1	Two man troop seat (2550005) (15 0ff).	Lower sidewall FS 245 to 445 LH. Lower sidewall FS 620 to 695 LH.	Make sure that they are stowed.
1.2	One man troop seat (2550005) (2 0ff).	Lower sidewall FS 465 LH.	
1.3	Two man troop seat (2550005) (15 0ff).	Lower sidewall FS 245 to 440 RH. Lower sidewall FS 620 to 695 RH.	Make sure that they are stowed.
1.4	One man troop seat (2550005) (2 0ff).	Lower sidewall FS 465 RH.	
1.5	Seat support beam (2550004) (4 off).	Against stanchion FS 245 LH.	Make sure that they are stowed.
1.6	Seat support beam (2550004) (4 off).	Sidewall mountings FS 617 to 697 RH.	
1.7	Seat support fitting (Wheel well) (2550021) (8 off).	Sidewall plate FS 635 to 660 LH.	Make sure that they are stowed.
1.8	Seat support fitting (Wheel well) (2550021) (8 off).	Sidewall plate FS 635 to 660 RH.	

E0491 (13) Continued

Figure 9 Example of a Topic 5B1C annex work card

CHAPTER 11-0

PACKAGED MAINTENANCE SCHEDULES - GENERAL

CONTENTS

Para

1 Introduction
8 Build-up schedule system
9 Repetitive work card system
10 Discrete major packages
11 Format of aircraft packaged maintenance schedules
12 Preliminary pages
12 Front cover
13 Amendment record
14 Record of Advance Information Leaflets (AIL) and Service Amendment Leaflets (SAL)
15 Contents
16 Introduction
17 Health and safety at work
18 Zonal plan
19 List of card numbers allocated
21 Supplementary maintenance
22 Section chapters
23 Layout of work cards
27 Numbering of work cards
28 Cross-referencing
29 Duration of work
30 Associated work cards for assistance, preparation and recovery tasks
31 Work card example

Table Page

1 Packaged maintenance schedules 2

Figure Page

1 Example of a packaged maintenance schedule contents page 6
2 Example of a packaged maintenance schedule health and safety at work page 7
3 Example 1 of a packaged maintenance schedule zonal plan page 8
4 Example 2 of a packaged maintenance schedule zonal plan page 9
5 Example 1 of a packaged maintenance schedule list of cards allocated page 10
6 Example 2 of a packaged maintenance schedule list of cards allocated page 11
7 Example 3 of a packaged maintenance schedule list of cards allocated page 12
8 Example of a schedule of work cards page 13
9 Example of a packaged maintenance schedule supplementary maintenance page 14
10 Example of a packaged maintenance schedule list of chapters page 15
11 Example of a packaged maintenance schedule work card 16

INTRODUCTION

1 Packaged maintenance schedules are those schedules, other than the FSS, which detail those preventive maintenance activities promulgated in the Topic 5A1 MML that are to be done at specified intervals based on allotted numbers of flying hours or calendar time. Those activities that can not be included in the packaged schedules are treated as Out-of-Phase (OOP) tasks, which are managed independently. Table 1 shows the various types of packaged maintenance schedules that are currently in use. Also shown are the chapter numbers within this publication that describes them in more detail.

2 In operational or combat conditions it may be appropriate to tolerate the risk associated with reduced levels of maintenance. The Topic 5(CTY) details the minimum preventive maintenance required during such conditions.

The initiation of Contingency maintenance is the responsibility of the platform PT and is to be in compliance with the aircraft Topic 2(N/A/R)1.

TABLE 1 PACKAGED MAINTENANCE SCHEDULES

TITLE	TOPIC	CHAPTER
Primary Maintenance Schedule	5B2	11-1
Flexible Primary Maintenance Schedule	5B2A	11-2
Minor Maintenance Schedule	5C	11-3
Equalized Maintenance Schedule	5C	11-4
Basic Maintenance Schedule (Build-up style))	5C	11-5
Basic Maintenance Schedule (Flex-ops style)	5C	11-6
Contingency Maintenance Schedule	5(CTY)	11-7
Major /Depth Maintenance Schedule	5D	11-8

3 The work required should be detailed on either A4 landscape or A4 portrait work cards for use by tradesmen. The preferred format for work cards is the MOD Form 707MS.

4 The Topic 5B2, 5C and 5D may be published as separate topics or in one of the following combinations:

4.1 As a combined Primary and Minor schedule (5B2&C) with a separate Major Schedule (5D).

4.2 As a combined Primary, Minor and Major Schedule (5B2, C&D).

5 The criteria to determine how the Topics 5B2, 5C and 5D are published are as follows:

5.1 The quantity of work cards in each package.

5.2 The various levels of maintenance that need to be done by different units or organizations.

5.3 The need for a discrete Major package (see Para 10).

6 If required by the platform PT, a Topic 5B2A Flexible Primary Maintenance Schedule may be produced as an alternative to the Topic 5B2 Primary Maintenance Schedule.

7 If required by the platform PT, a Topic 5C Equalized Maintenance Schedule may be produced as an alternative to the Topic 5C Minor Maintenance Schedule and Topic 5D Major Maintenance Schedule.

BUILD-UP SCHEDULE SYSTEM

8 The 'build-up' system of publishing work cards is used when a maintenance package also requires the completion of all higher frequency packages; ie, the work cards of the higher frequency packages are not reproduced with those of a lower frequency. Instructions are printed in the preliminary pages of each topic stating that, in addition to the work cards for the maintenance referred to, all work cards of a higher frequency must be completed. This method is economical in the total number of work cards produced and avoids the repetition of amendments necessitated when separate topics are issued.

REPETITIVE WORK CARD SYSTEM

9 The ‘repetitive work card’ system is represented by discrete maintenance packages that are independent of any other maintenance packages. This system is applicable to all equalized and flexible maintenance schedules.

DISCRETE MAJOR PACKAGES

10 A discrete Major package contains not only the Major frequency work cards, but also all of the work cards contained in the higher frequency packages of the associated build-up system. This type of package is best suited to aircraft with extensive or complex maintenance schedules, where adoption of a discrete Major package serves to simplify maintenance management.

FORMAT OF AIRCRAFT PACKAGED MAINTENANCE SCHEDULES

11 Aircraft packaged maintenance schedules consist of a series of preliminary pages followed by a number of Sections. There is one section for each maintenance package contained in the schedule. The last card in the preliminary pages is a Supplementary Maintenance card, if this is required.

PRELIMINARY PAGES

Front cover

12 The front cover forms the title page of a packaged maintenance schedule as explained in Chapter 2. Examples of front covers are presented in Chapter 2-0, Figures 1 to 3.

Amendment record

13 The Amendment Record is a common preliminary page as described in Chapter 2. Examples of A4 size Amendment Records are presented in Chapter 2-0, Figures 4 to 7.

Record of Advance Information Leaflets (AIL) and Service Information Leaflets (SAL)

14 The Record of AILs and SALs is a common preliminary page as described in Chapter 2. Examples of A4 size Records of AILs and SALs are shown in Chapter 2-0, Figures 8 to 11.

Contents

15 The Contents page contains a list of headings that summarizes the make up of a packaged maintenance schedule. It also identifies the various sections contained in a schedule, whereby each section represents a single maintenance package. There may also be a requirement for a section that is dedicated to Out of Phase work cards. This requirement used to be the reserve of Army Basic Maintenance Schedules, which provided a unique means of managing OOP maintenance without the need for separate component lifing and OOP registers in the Topic 5A1. However, the availability of OOP work cards has proved beneficial to maintenance management, even for those platforms that operate using component lifing and OOP registers. An example Contents page is shown in Figure 1.

Introduction

16 The introduction describes the type of maintenance package work cards contained in the schedule. It also provides supplementary information regarding their general use and completion. Examples of packaged maintenance schedule Introduction pages are shown in Chapters 11-1 to 11-7.

Health and safety at work

17 An example of a packaged maintenance schedule Health and Safety at Work page is shown in Figure 2.

Zonal plan

18 The Zonal Plan defines the various zones contained in an entire aircraft and allocates an appropriate identification number and description to each zone. The Zonal Plan is illustrated in the maintenance schedule preliminary pages only if a zonal plan is not provided in the Aircraft Topic 1. Example pages of a maintenance schedule Zonal Plan are shown in Figures 3 and 4.

List of card numbers allocated

19 The List of Card Numbers Allocated illustrates, in tabular form, the numbers of the work card series that have been allocated for use in each work package. The list does not represent the actual numbers of the work cards contained in a schedule. Examples of List of Card Numbers Allocated Pages are shown in Figures 5 to 7.

20 The List of Card Numbers Allocated may be augmented by a schedule of work cards as in the example shown in Figure 8.

Supplementary maintenance

21 Supplementary Maintenance pages are included to facilitate the listing of other maintenance tasks, such as Technical Instructions, that are to be done at the same time as the scheduled maintenance. An example Supplementary Maintenance page is shown in Figure 9.

SECTION CHAPTERS

22 Each section of a packaged maintenance schedule is divided into a series of chapters that represent each of the trades associated with the schedule. An example List of Chapters is shown in Figure 10.

LAYOUT OF WORK CARDS

23 Each chapter of a section contains all of the work cards associated with a particular trade for a specific maintenance package. Work cards are to indicate the SIN and item/operation as printed in the MML. If necessary, operations may be amplified but any such amplification is not to appear in the MML.

24 A standard entry, contained within the card header, directs the user of the schedule to the information contained in the Topic 5A2.

25 The text of work cards is divided into blocks as follows:

25.1 A new block is made for each change of system or sub-system.

25.2 Each block is individually numbered beginning with block 1 on each card.

25.3 Each block has a main centre heading indicating the system and sub-system of the maintenance items in the block.

25.4 Location of items by zone is indicated by a sub-heading on the left of the block immediately above the item(s) to which it refers.

26 Pre or post mod states are clearly annotated against the relevant items.

NUMBERING OF WORK CARDS

27 Work cards are numbered as detailed in Chapter 1-5, Supplementary Rules.

CROSS-REFERENCING

28 Reference may be made on work cards (as per the MML operation entry) to the AMM, EMM, MPs or NDT techniques as required. Cross-reference between work cards is entered in the block entitled 'Associated Cards'. Maintenance schedules should not repeat information which is covered in other publications but are to make reference to any such publications.

DURATION OF WORK

29 When a flexible operations maintenance regime is adopted, the duration of work contained on each work card should be limited to approximately 2 hours. This allows greater flexibility for planning and aircraft recovery purposes.

ASSOCIATED WORK CARDS FOR ASSISTANCE, PREPARATION AND RECOVERY TASKS

30 The requirement for assistance from another tradesman to prepare for, do or recover from a maintenance task should be clearly stated on all affected work cards. Assistance, preparation and recovery tasks are allocated a SIN comprising the system and sub-system applicable to the item and the last 3 digits designated '000'. The number of the card containing associated work is recorded in the block entitled 'Associated Cards'.

WORK CARD EXAMPLE

31 An example of a packaged maintenance schedule work card produced in MOD Form 707MS format is shown in Figure 11.

TYPE OF MAINTENANCE SCHEDULE
AIRCRAFT NAME

AP Code-XXX

CONTENTS

Preliminary Material — Page

Title page ..... (i)/(ii)
Amendment record ..... (iii) and (iv)
Record of Advance Information Leaflet (AIL) signals ..... (v) and (vi)
Contents (This page) ..... (vii)/(viii)
Introduction ..... (ix)/(x)
Health and safety at work ..... (xi)/(xii)
Zonal plan ..... (xiii) to (xv)/(xvi)
List of card numbers allocated ..... (xvii)/(xviii)
Supplementary maintenance ..... (xix(/(xx)

Sections

1 Primary
2 Minor
3 Major
4 Out of Phase

AUTHORS NOTE: The example list of sections shown represents a combined Topic 5B2, C&D. The list of sections may also represent other maintenance packages; eg, a series of equalized packages or flex-op groups.

E0018 (3)

Page (vii)/(viii)

Figure 1 Example of a packaged maintenance schedule contents page

AP Code-XXX

TYPE OF MAINTENANCE SCHEDULE
AIRCRAFT NAME

HEALTH AND SAFETY AT WORK

HEALTH AND SAFETY AT WORK

The Health and Safety at Work etc. Act 1974 (HSWA) requires you to:

- Take reasonable care for the health and safety of yourself and other persons who may be affected by your actions or omissions at work.
- Co-operate with your supervisors and any other persons to enable them to comply with any safety and legal requirements.
- Not intentionally or recklessly interfere with or misuse anything supplied in the interest of health, safety or welfare.

JSP 375 - HEALTH AND SAFETY HANDBOOK

JSP 375 provides instruction and guidance on the policy, top-level organisation and arrangements by which the Ministry of Defence ensures the maintenance of acceptable standards of Health and Safety (H&S) throughout the organisation. Both the Health and Safety at Work Etc Act 1974 and the Secretary of State's H&S policy apply to all members of HM Forces and MOD civilian employees and to all activities done under the control of the Secretary of State for Defence.

All line managers and employees must comply with:

- The guidance and requirements of JSP 375.
- All local promulgated orders and procedures.
- All risk mitigation measures and safety requirements assessed and associated with any work activity done on this aircraft and equipment.

E0491 (5)

Page (xi)/(xii)

Figure 2 Example of a packaged maintenance schedule health and safety at work page

TYPE OF MAINTENANCE SCHEDULE
AIRCRAFT NAME

AP Code-XXX

ZONAL PLAN

100	FRONT FUSELAGE	500	TAIL (EMPENNAGE) UNIT
110	Propeller	510	Fin
120	Engine compartment	511	Dorsal fin
		520	Rudder
200	CENTRE FUSELAGE	530	Tailplane
		531	Left elevator
210	Cabin front	532	Right elevator
211	Cabin front LH	533	Left elevator trim tab
212	Cabin front RH		
220	Cabin rear	600	UNDERCARRIAGE
300	REAR FUSELAGE	610	Left wing strut
		620	Right wing strut
400	WINGS	630	Left main undercarriage
		640	Right main undercarriage
410	Left wing	650	Tail undercarriage
411	Left wing leading edge (Torsion box)	660	Stores rack
412	Left wing centre	670	Left foot step
413	Left wing outer	680	Right foot step
414	Left wing tip		
415	Left aileron	800	DOORS
416	Left flat and flap shroud		
417	Left wing fuel tank	810	Cabin front door LH
420	Right wing	820	Cabin front door RH
421	Right wing leading edge (Torsion box)	830	Cabin rear door RH
422	Right wing centre		
423	Right wing outer		
424	Right wing tip		
425	Right aileron		
426	Right flat and flap shroud		
427	Right wing fuel tank		

E0491 (14)

Page (xxi)/(xxii)

Figure 3 Example 1 of a packaged maintenance schedule zonal plan page

TYPE OF MAINTENANCE SCHEDULE
AIRCRAFT NAME

AP Code-XXX

ZONAL PLAN

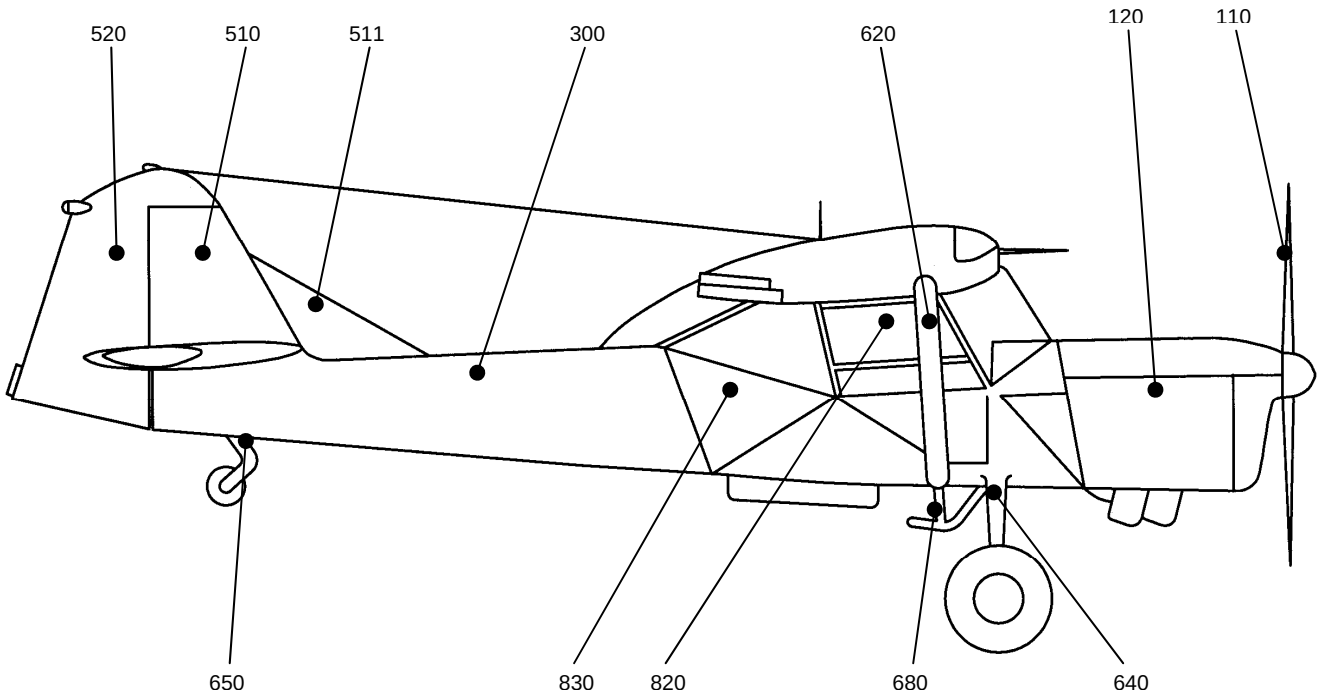

Fig 1 Zonal Plan

E0491 (15)

Page (xxiii)/(xxiv)

Figure 4 Example 2 of a packaged maintenance schedule zonal plan page

PRIMARY, MINOR, MAJOR AND OUT OF PHASE MAINTENANCE SCHEDULE
AIRCRAFT NAME

AP Code-5B2C&D

LIST OF CARD NUMBERS ALLOCATED

SECTION	MAINTENANCE			
1	PRIMARY			
2	MINOR			
3	MAJOR			
4				OUT OF PHASE
TRADE	WORK CARD NUMBRS			
Ac	1-100	271-370	441-500	581-780
Av	101-150	371-390	501-520	781-790
NDT	151-200	391-410	521-540	791-800
ZONAL	201-270	411-440	541-580	

AUTHORS NOTE: Trade abbreviations should reflect specific Service applicability (See Chapter 1-4 Para 6).

E0491 (16)

Page (xxv)/(xxvi)

Figure 5 Example 1 of a packaged maintenance schedule list of cards allocated page

MAJOR
AIRCRAFT NAME

AP Code-5D

LIST OF CARD NUMBERS ALLOCATED

TRADE	WORK CARD NUMBERS
Mech(AF)	1 - 300
Wpns	301 - 350
Av(Elect)	351 - 400
Mech(Prop)	401 - 450
Av(AV)	451 - 550
SE	551 - 600
NDT	601 - 650
Ptr/Fnr	651 - 700
Zonal	701 - 800

AUTHORS NOTE: Trade abbreviations should reflect specific Service applicability (See Chapter 1-4 Para 6).

E0491 (16)

Page (xxv)/(xxvi)

Figure 6 Example 2 of a packaged maintenance schedule list of cards allocated page

FLEXIBLE PRIMARY MAINTENANCE SCHEDULE
AIRCRAFT NAME

AP Code-5B2A

LIST OF CARD NUMBERS ALLOCATED

	MAINTENANCE GROUP							
TRADE	A	B	C	D	E	F	G	H
Mech(AF)	A1 - A27	B1 - B27	C1 - C27	D1 - D27	E1 - E27	F1 - F27	G1 - G27	H1 - H27
Wpns	A28 - A30	B28 - B30	C28 - C30	D27 - D30	E28 - E30	F28 - F30	G28 - G30	H28 - H30
Av(Elect)	A31 - A40	B31 - B40	C31 - C40	D31 - D40	E31 - E40	F31 - F40	G31 - G40	H31 - H40
Mech(Prop)	A41 - A60	B41 - B60	C41 - C60	D41 - D60	E41 - E60	F41 - F60	G41 - G60	H41 - H60
Av(AV)	A61 - A70	B61 - B70	C61 - C70	D61 - D70	E61 - E70	F61 - F70	G61 - G70	H61 - H70
SE	A71 - A74	B71 - B74	C71 - C74	D71 - D74	E71 - E74	F71 - F74	G71 - G74	H71 - H74
NDT	A75 - A80	B75 - B80	C75 - C80	D75 - D80	E75 - E80	F75 - F80	G75 - G80	H75 - H80
Ptr/Fnr	A81 - A84	B81 - B84	C81 - C84	D81 - D84	E81 - E84	F81 - F84	G81 - G84	H81 - H84
Zonal	A85 - A100	B85 - B100	C85 - C100	D85 - D100	E85 - E100	F85 - F100	G85 - G100	H85 - H100

AUTHORS NOTE: Trade abbreviations should reflect specific Service applicability (See Chapter 1-4 Para 6).

E0491 (16)

Page (xxv)/(xxvi)

Figure 7 Example 3 of a packaged maintenance schedule list of cards allocated page

Sheet 2
Amdt 20

EQUALIZED MAINTENANCE
SCHEDULE OF WORK CARDS
AIRCRAFT NAME

AP Code-5C
XX Edition

EQUALIZED MAINTENANCE GROUP 1

CARD NO Mech (Prop)	CARD NO Mech (Prop)	CARD NO Mech (Prop)	CARD NO Mech (Prop)	CARD NO Mech (Prop)	CARD NO Av (AV)	CARD NO Av (AV)	CARD NO Av (AV)	CARD NO Av (AV)	CARD NO SE	CARD NO NDT	CARD NO NDT	CARD NO Ptr/Fnr
473	501	1352	1380	1414	571	609	1472			1511	2140	721
474	502	1353	1381	1415	572	610	1473			1513	2141	722
475	503	1354	1382	1416	579	611	1474			1514	2142	723
476	504	1355	1383	1417	580	612	1480			1515	2143	724
477	505	1356	1384	1418	581	613	1481			1518	2150	725
478	506	1357	1385	1962	582	615	1483			1519	2151	726
479	507	1358	1386	1976	583	616	1484			1520	2152	727
480	508	1359	1387		584	617	1485			1521	2153	728
481	509	1360	1388		585	618	1491			1522	2154	729
482	510	1361	1389		586	620	1492			1523		730
483	511	1362	1390		587	1451				1528		1551
484	512	1363	1391		588	1452				1529		
484	513	1364	1392		589	1453				1530		
486	514	1365	1393		590	1454				2121		
487	515	1366	1394		591	1455				2122		
488	516	1367	1395		593	1459				2123		
489	517	1368	1396		594	1461				2124		
490	518	1369	1397		595	1462				2125		
491	519	1370	1398		596	1463				2130		
492	520	1371	1399		597	1464				2131		
493	521	1372	1400		599	1466				2132		
494	522	1373	1402		600	1467				2133		
495	523	1374	1403		604	1468				2134		
496	524	1375	1404		605	1469				2135		
497	525	1376	1405		606	1470				2136		
498	526	1377	1406		607	1471				2137		
499	527	1378	1407							2138		
500	528	1379	1408							2139		
	529		1409									
	530		1410									
	1351		1411									
			1412									
			1413									

10162718 (4)

Page (xxxix)

Figure 8 Example of a schedule of work cards

TYPE OF MAINTENANCE SCHEDULE AIRCRAFT NAME SUPPLEMENTARY MAINTENANCE	AP Code- XXX	Maintenance Record MOD Form 707MS Aircraft or Equipment Ser No: Date:
INFORMATION IN THE TOPIC 5A2 IS TO BE CONSULTED THROUGHOUT THE WORK DETAILED ON THIS CARD		**Brief details of suspected fault(s) and SNOW(s)**

E0491 (52) Page (xix)/(xx)

Figure 9 Example of a packaged maintenance schedule supplementary maintenance page

MINOR

AIRCRAFT NAME

LIST OF CHAPTERS

AP Code-5C
4th Edition
Section 2

	Card No.	No. of Cards
Chapter 1 - Mechanical	271 - 294	24
Chapter 2 - Avionics	371 - 373	5
Chapter 3 - Non-destructive Testing	391 - 393	3
Chapter 4 - Zonal	411 - 420	10

AUTHORS NOTE: Trades should reflect specific Service applicability (See Chapter 1-4 Para 6).

E0491 (52)

Figure 10 Example of a packaged maintenance schedule list of chapters page

AIRCRAFT Card 13	BASIC 1 AIRCRAFT NAME	Ap Code-5C&D 2nd Edition Sect 1 Chap 1	Maintenance Record Aircraft or Equipment Serial No: Date:				MOF Form707MS (Revised Jan 01)	
INFORMATION IN THE TOPIC 5A2 IS TO BE CONSULTED THROUGHOUT THE WORK DETAILED ON THIS CARD			Tradesman		Brief details of Suspected fault(s} And SNOW(s}	Supervisor		
Associated Cards		Power	Code	Man Hrs	Certification and TDM		Man Hrs	Certification and TDM
12		N/A						
Block 1	ENGINE TURBOPROP - COMPRESSOR SECTION							
	Zone 481/482							
7230003	Compressor scroll.	Examine (AMM PN-A-71-00-00-00A-281A-A).						
7230004	Compressor scroll to Pc filter tube assembly.	Examine (AMM PN-A-71-00-00-00A-281A-A).						
7230004	Compressor discharge air tube (2 off).	Examine (AMM PN-A-71-00-00-00A-281A-A).						
7230004	Compressor mounting insert (5 off).	Examine (AMM PN-A-71-00-00-00A-281A-A).						
BLOCK 2	ENGINE TURBOPROP - COMBUSTION							
	Zone 481/482							
7240001	Burner drain valve.	Clean (Removed) (AMM PN-A-72-40-15-00A-251A-A).						
E0004MW(18)								

Figure 11 Example of a packaged maintenance schedule work card

CHAPTER 11-1

TOPIC 5B2 PRIMARY MAINTENANCE SCHEDULE

CONTENTS

Para

1 Introduction
3 Format and layout

Figure Page

1 Layout of a primary maintenance schedule 2
2 Example of a Topic 5B2 primary maintenance schedule introduction page 3

INTRODUCTION

1 The Topic 5B2 Primary Maintenance Schedule contains the maintenance activities detailed in each Primary maintenance package.

2 The topic 5B2 may form part of a combined Primary and Minor schedule (5B2&C). It may also form part of a combined Primary, Minor and Major Schedule (5B2, C&D). If this is so, then a single set of preliminary pages precedes a series of sections that represent each of the maintenance packages contained in the combined schedule.

FORMAT AND LAYOUT

3 The Topic 5B2 is produced in an A4 landscape format and the general layout is as described in Chapter 11-0. This layout is also illustrated in Figure 1 and a Topic 5B2 Introduction is shown in Figure 2.

4 Unless otherwise directed, the Topic 5B2 work cards are produced in MOD Form 707MS format.

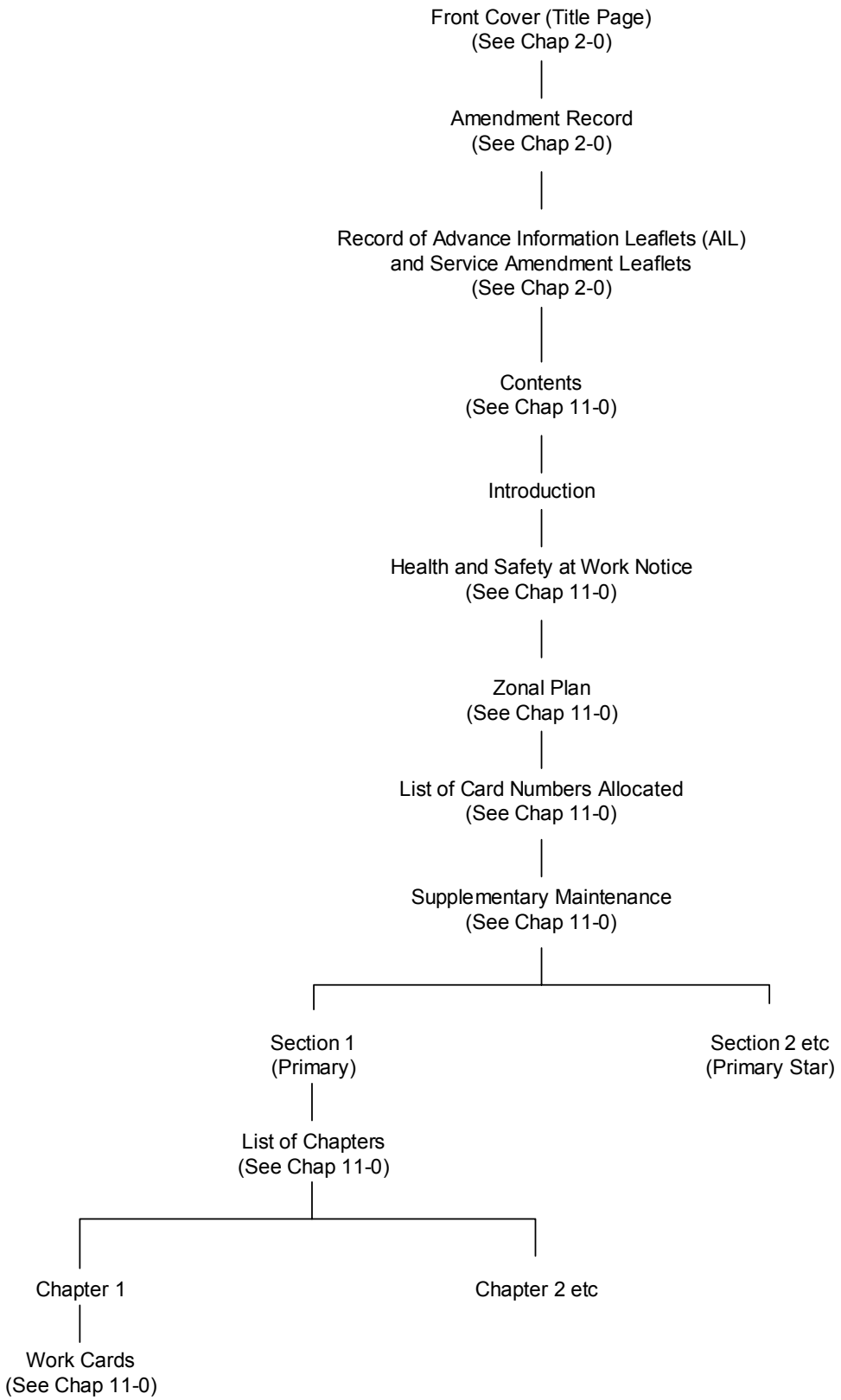

Figure 1 Layout of a primary maintenance schedule

PRIMARY MAINTENANCE SCHEDULE AP Code-5B2
AIRCRAFT NAME

INTRODUCTION

1 This Topic 5B2 contains a series of work cards for Primary and Primary Star maintenance.

2 This Topic 5B2 is to be used in conjunction with the AMM, the Topic 5A1 and the Topic 5A2, which contain information on the following:

AMM - Aircraft Maintenance Manual.
5A1 - Master Maintenance Schedule.
5A2 - Hazard and Maintenance Information.

3 When this Topic 5B2 is in use, all work cards of a higher frequency are to be done in addition to the lower frequency work cards; ie, Primary Star maintenance = Primary and Primary Star work packages.

4 Each item in the Master Maintenance List (MML) is allocated a Scheduled Identification Number (SIN), which identifies the item wherever it appears in the maintenance schedule. Work card assistance, preparation and recovery items are annotated with the aircraft system and sub-system SIN applicable to the item and the last three digits designated ‘000’.

5 When an item is identified as a Structurally Significant Item (SSI) in accordance with ▶MRP RA5720◀, the item description is followed immediately by the identifier '(SSI)'. The identifier is to include the SSI number. SSI lists and illustrations can be found in the Topic 5V.

6 Operations that specify the survey of a zone are to be done by personnel who are authorized in accordance with ▶MAP-01 Chapter 5.3◀.

7 Operations that are not suitable for self-supervision are indicated by the code 'S' appearing in the column headed 'Code'.

8 With the exception of when a separate Topic 5(CTY) Contingency Maintenance Schedule is produced, operations that are to be done to satisfy contingency maintenance requirements are annotated with the letters 'Cty' in the column headed 'Code'.

9 A ‘List of Card Numbers Allocated’ is included in the preliminary pages of this schedule. Unused card numbers are provided to allow for any future amendment action.

10 New or amended material is indicated by a vertical line in the left hand margin to show the extent of the amendment.

E0018 ( ) Page (ix)/(x)

Figure 2 Example of Topic 5B2 primary maintenance schedule introduction page

CHAPTER 11-2

TOPIC 5B2A FLEXIBLE PRIMARY MAINTENANCE SCHEDULE

CONTENTS

Para

1 Introduction
4 Format and layout

Figure Page

1 Layout of a flexible primary maintenance schedule 2
2 Example of a Topic 5B2A flexible primary maintenance schedule introduction page 3

INTRODUCTION

1 The Topic 5B2A Flexible Primary Maintenance Schedule contains the maintenance activities detailed in each Primary maintenance package. However, the tasks contained in those schedules are further divided into groups that are done within specified intervals that are spread across the overall Primary maintenance schedule interval(s) in accordance with ►MAP-01 Chapter 5.3◄.

2 The Topic 5B2A is independent of a combined Primary and Minor schedule (5B2&C) or a combined Primary, Minor and Major Schedule (5B2, C&D). Consequently, when a Minor or Major is required, the Primary, and Primary Star work cards are not to be done at that maintenance; ie, a Minor Star maintenance = Minor and Minor Star work packages only, and a Major = Major, Minor and Minor Star work packages only.

3 Although this chapter explains the method of increasing the flexibility of a Primary maintenance schedule, the same principles can be applied to a build-up style Basic maintenance schedule, which is described in Chapter 11-5.

FORMAT AND LAYOUT

4 The Topic 5B2A is produced in an A4 landscape format and the general layout is as described in Chapter 11-0. This layout is also illustrated in Figure 1 and a Topic 5B2 Introduction is shown in Figure 2.

5 Unless otherwise directed, the Topic 5B2A work cards are produced in MOD Form 707MS format.

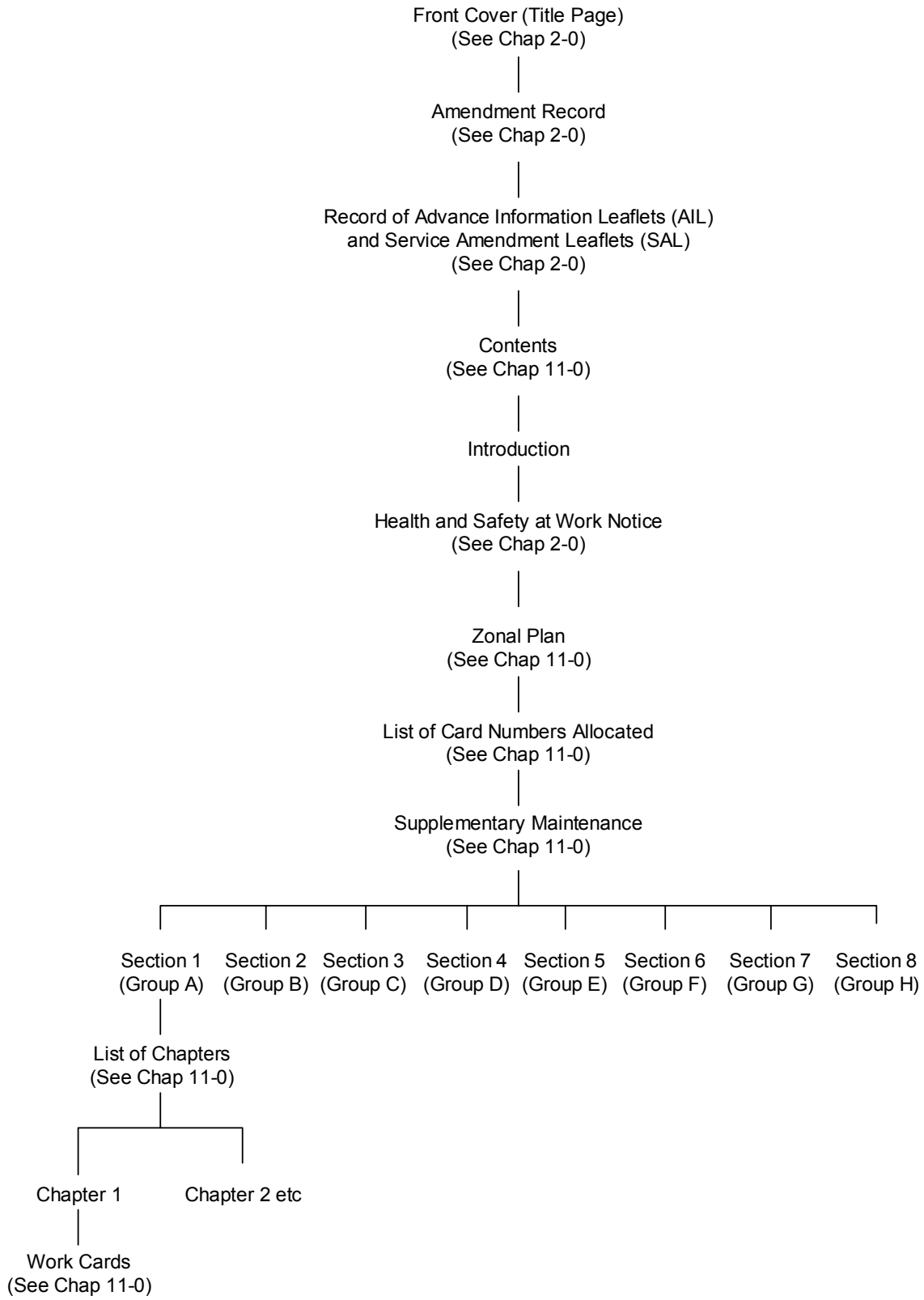

Figure 1 Layout of a flexible primary maintenance schedule

FLEXIBLE PRIMARY MAINTENANCE SCHEDULE AP Code-5B2A
AIRCRAFT NAME

INTRODUCTION

1 This Topic 5B2A contains a series of work cards for Primary and Primary Star maintenance frequencies combined to allow the schedule to be used in a more flexible fashion.

2 This Topic 5B2A is to be used in conjunction with the AMM, the Topic 5A1 and the Topic 5A2, which contain information on the following:

AMM - Aircraft Maintenance Manual.
5A1 - Master Maintenance Schedule.
5A2 - Hazard and Maintenance Information.

3 This Topic 5B2A can be used as an alternative to the Primary and Primary Star schedules contained in the Topic 5B2, C&D.

4 When this Topic is in use, each group is to be done at any time within a forecast flying hour period of 18 hours and 45 minutes (18.45). Each group is to be forecast sequentially (eg Group A = 3000 to 3018.45 Hours. Group B = 3018.45 to 3037.30 Hours etc.). This flexibility of maintenance satisfies the requirements of ▶MAP-01 Chapter 5.3◀ in that a maintenance anticipation or extension of 25 percent (for Primary items) is allowed for within the maintenance periods.

5 When this Topic is in use, the requirements of a Primary and Primary Star maintenance are done on a continuous basis, therefore, when a Minor or Major is required, the Primary, and Primary Star work cards contained in the Topic 5B2C&D are not to be done at that maintenance; ie, Minor Star maintenance = Minor and Minor Star work packages.

6 Each item in the Master Maintenance List (MML) is allocated a Scheduled Identification Number (SIN), which identifies the item wherever it appears in the maintenance schedule. Work card assistance, preparation and recovery items are annotated with the aircraft system and sub-system SIN applicable to the item and the last three digits designated ‘000’.

7 When an item is identified as a Structurally Significant Item (SSI) in accordance with ▶MRP RA5720◀, the item description is followed immediately by the identifier '(SSI)'. The identifier is to include the SSI number. SSI lists and illustrations can be found in the Topic 5V.

8 Operations that specify the survey of a zone are to be done by personnel who are authorized in accordance with ▶MAP-01 Chapter 5.3◀.

9 Operations that are not suitable for self-supervision are indicated by the code 'S' appearing in the column headed 'Code'.

10 With the exception of when a separate Topic 5(CTY) Contingency Maintenance Schedule is produced, operations that are to be done to satisfy contingency maintenance requirements are annotated with the letters 'Cty' in the column headed 'Code'.

11 A ‘List of Card Numbers Allocated’ is included in the preliminary pages of this schedule. Unused card numbers are provided to allow for any future amendment action.

12 New or amended material is indicated by a vertical line in the left hand margin to show the extent of the amendment.

E0018 ( ) Page (ix)/(x)

Figure 2 Example of Topic 5B2A flexible primary maintenance schedule introduction page

CHAPTER 11-3

TOPIC 5C MINOR MAINTENANCE SCHEDULE

CONTENTS

Para

1 Introduction
3 Format and layout

Figure Page

1 Layout of a minor maintenance schedule 2
2 Example of a Topic 5C minor maintenance schedule introduction page 3

INTRODUCTION

1 The Topic 5C Minor Maintenance Schedule contains the maintenance activities detailed in each Minor maintenance package.

2 The Topic 5C Minor Maintenance Schedule may form part of a combined Primary and Minor schedule (5B2&C) or part of a combined Primary, Minor and Major Schedule (5B2, C&D). If this is so, then a single set of preliminary pages precedes a series of sections that represent each of the maintenance packages contained in the combined schedule.

FORMAT AND LAYOUT

3 The Topic 5C Minor Maintenance Schedule is produced in an A4 landscape format and the general layout is as described in Chapter 11-0. This layout is also illustrated in Figure 1 and a Topic 5B2 Introduction is shown in Figure 2.

4 Unless otherwise directed, the Topic 5B2 Minor Maintenance Schedule work cards are produced in MOD Form 707MS format.

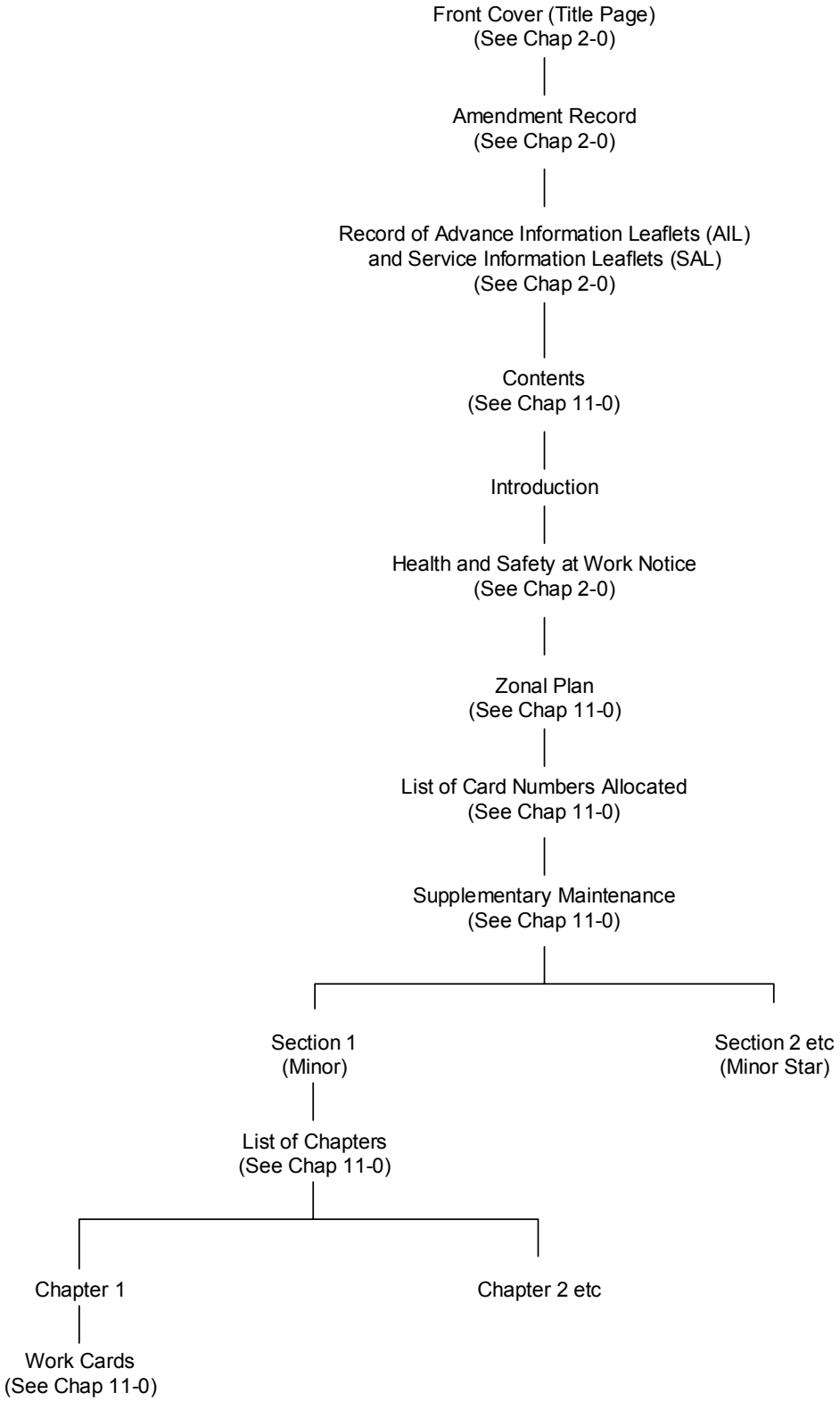

Figure 1 Layout of a minor maintenance schedule

MINOR MAINTENANCE SCHEDULE
AIRCRAFT NAME

AP Code-5C

INTRODUCTION

1 This Topic 5C contains a series of work cards for Minor and Minor Star maintenance.

2 This Topic 5C is to be used in conjunction with the AMM, the Topic 5A1 and the Topic 5A2, which contain information on the following:

AMM - Aircraft Maintenance Manual.
5A1 - Master Maintenance Schedule.
5A2 - Hazard and Maintenance Information.

3 When this Topic 5C is in use, all work cards of a higher frequency are to be done in addition to the lower frequency work cards; ie, Primary Star maintenance = Primary and Primary Star work packages.

4 Each item in the Master Maintenance List (MML) is allocated a Scheduled Identification Number (SIN), which identifies the item wherever it appears in the maintenance schedule. Work card assistance, preparation and recovery items are annotated with the aircraft system and sub-system SIN applicable to the item and the last three digits designated ‘000’.

5 When an item is identified as a Structurally Significant Item (SSI) in accordance with ▶MRP RA5720◀, the item description is followed immediately by the identifier '(SSI)'. The identifier is to include the SSI number. SSI lists and illustrations can be found in the Topic 5V.

6 Operations that specify the survey of a zone are to be done by personnel who are authorized in accordance with ▶MAP-01 Chapter 5.3◀.

7 Operations that are not suitable for self-supervision are indicated by the code 'S' appearing in the column headed 'Code'.

8 With the exception of when a separate Topic 5(CTY) Contingency Maintenance Schedule is produced, operations that are to be done to satisfy contingency maintenance requirements are annotated with the letters 'Cty' in the column headed 'Code'.

9 A ‘List of Card Numbers Allocated’ is included in the preliminary pages of this schedule. Unused card numbers are provided to allow for any future amendment action.

10 New or amended material is indicated by a vertical line in the left hand margin to show the extent of the amendment.

E0018 ( )

Page (ix)/(x)

Figure 2 Example of Topic 5C minor maintenance schedule introduction page

CHAPTER 11-4

TOPIC 5C EQUALIZED MAINTENANCE SCHEDULE

CONTENTS

Para

1 Introduction
2 Format and layout

Figure Page

1 Layout of an equalized maintenance schedule 2
2 Example of a Topic 5C equalized maintenance package introduction page 3

INTRODUCTION

1 The Topic 5C Equalized Maintenance Schedule contains a series of discrete maintenance packages that are independent of each other, but which together make up the medium to low frequency PM tasks required in an aircraft maintenance regime. The concept of equalized maintenance is explained in ►MAP-01 Chapter 5.3◄. Effectively, the lower frequency tasks are spread evenly across the Equalized packages so that the elapsed time to complete each package is approximately the same. Although a Topic 5C Equalized Maintenance Schedule usually contains the entire medium to low frequency PM tasks of a PM programme, there may be a requirement for an equalized schedule to be supplemented with a discrete Topic 5D Major Schedule.

FORMAT AND LAYOUT

2 The Topic 5C Equalized Maintenance Schedule is produced in an A4 landscape format and the general layout is as described in Chapter 11-0. This layout is also illustrated in Figure 1 and a Topic 5C Equalized Maintenance Schedule Introduction page is shown in Figure 2.

3 Unless otherwise directed, the Topic 5C Equalized Maintenance Schedule work cards are produced in MOD Form 707MS format.

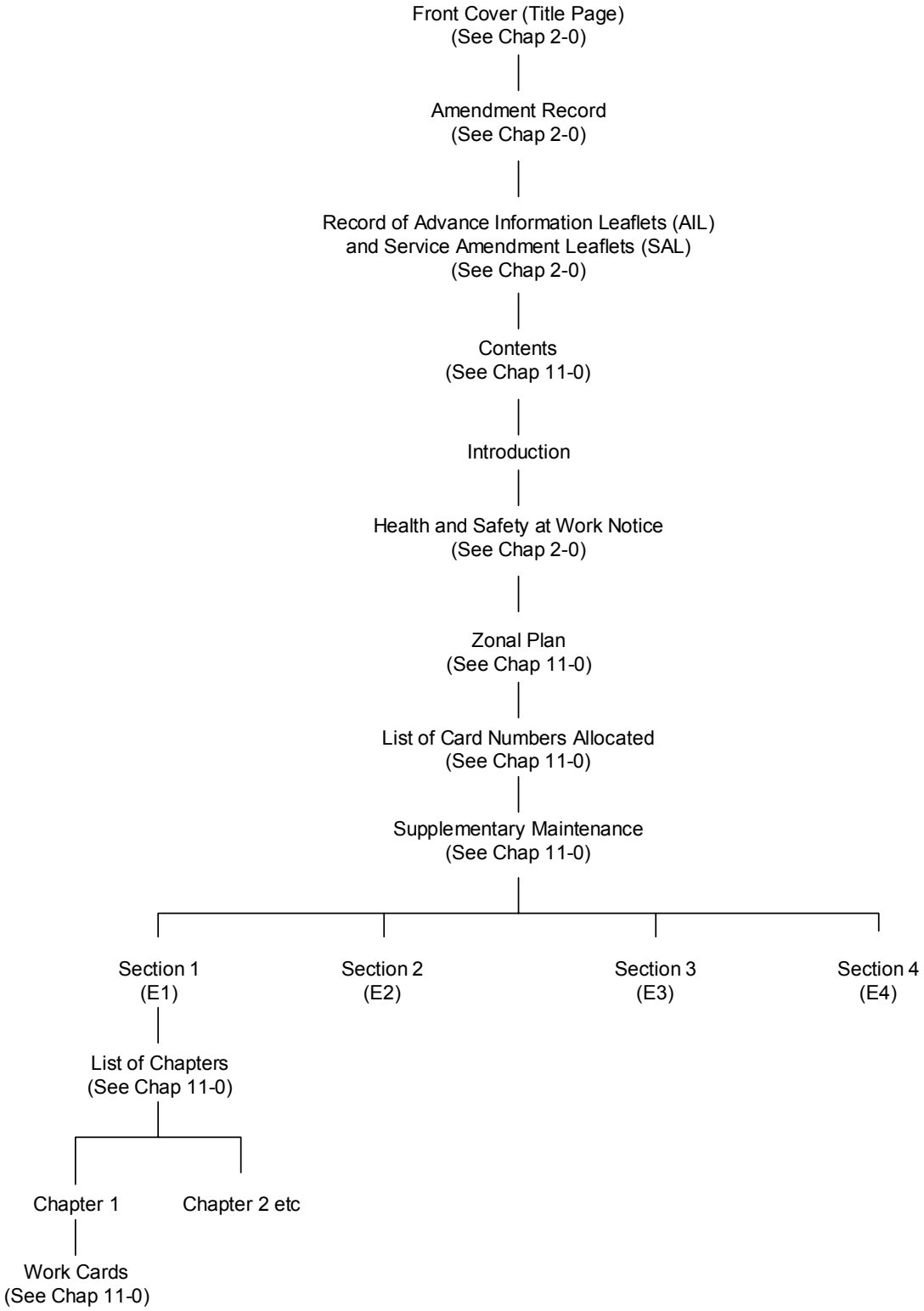

Figure 1 Layout of an equalized maintenance schedule

EQUALIZED MAINTENANCE SCHEDULE AP Code-5C
AIRCRAFT NAME

INTRODUCTION

1 This Topic 5C contains a series of work cards for the following Equalized maintenance packages:

Equalized 1 - (E1)
Equalized 2 - (E2)
Equalized 3 - (E3)
Equalized 4 - (E4)

2 This Topic 5C is to be used in conjunction with the AMM, the Topic 5A1 and the Topic 5A2, which contain information on the following:

AMM - Aircraft Maintenance Manual.
5A1 - Master Maintenance Schedule.
5A2 - Hazard and Maintenance Information.

3 Each item in the Master Maintenance List (MML) is allocated a Scheduled Identification Number (SIN), which identifies the item wherever it appears in the maintenance schedule. Work card assistance, preparation and recovery items are annotated with the aircraft system and sub-system SIN applicable to the item and the last three digits designated ‘000’.

4 When an item is identified as a Structurally Significant Item (SSI) in accordance with ▶MRP RA5720◀, the item description is followed immediately by the identifier '(SSI)'. The identifier is to include the SSI number. SSI lists and illustrations can be found in the Topic 5V.

5 Operations that specify the survey of a zone are to be done by personnel who are authorized in accordance with ▶MAP-01 Chapter 5.3◀.

6 Operations that are not suitable for self-supervision are indicated by the code 'S' appearing in the column headed 'Code'.

7 With the exception of when a separate Topic 5(CTY) Contingency Maintenance Schedule is produced, operations that are to be done to satisfy contingency maintenance requirements are annotated with the letters 'Cty' in the column headed 'Code'.

8 A ‘List of Card Numbers Allocated’ is included in the preliminary pages of this schedule. Unused card numbers are provided to allow for any future amendment action.

9 The ‘Schedule of Work Cards’ pages detail all the work card numbers applicable to each Equalized Maintenance group.

10 New or amended material is indicated by a vertical line in the left hand margin to show the extent of the amendment.

E0018 ( ) Page (ix)/(x)

Figure 2 Example of Topic 5C equalized maintenance schedule introduction page

CHAPTER 11-5

BUILD-UP STYLE TOPIC 5C BASIC MAINTENANCE SCHEDULE

CONTENTS

Para

1 Introduction
3 Format and layout

Figure Page

1 Layout of a build -up style basic maintenance schedule 2
2 Example of a build up style Topic 5C basic maintenance schedule introduction page 3

INTRODUCTION

1 The build-up style Topic 5C Basic Maintenance Schedule contains the maintenance activities detailed in each Basic maintenance package. This style of maintenance schedule is used by the Army and is the equivalent of the Primary and Minor build-up schedules used by the RAF.

2 The build-up style Topic 5C Basic Maintenance Schedule may form part of a combined Basic and Major Schedule (5C&D). If this is so, then a single set of preliminary pages precedes a series of sections that represent each of the maintenance packages contained in the combined schedule.

FORMAT AND LAYOUT

3 The build-up style Topic 5C Basic Maintenance Schedule is produced in an A4 landscape format and the general layout is as described in Chapter 11-0. This layout is also illustrated in Figure 1 and a Topic 5C Introduction is shown in Figure 2.

4 Unless otherwise directed, the build-up style Topic 5C Basic Maintenance Schedule work cards are produced in MOD Form 707MS format.

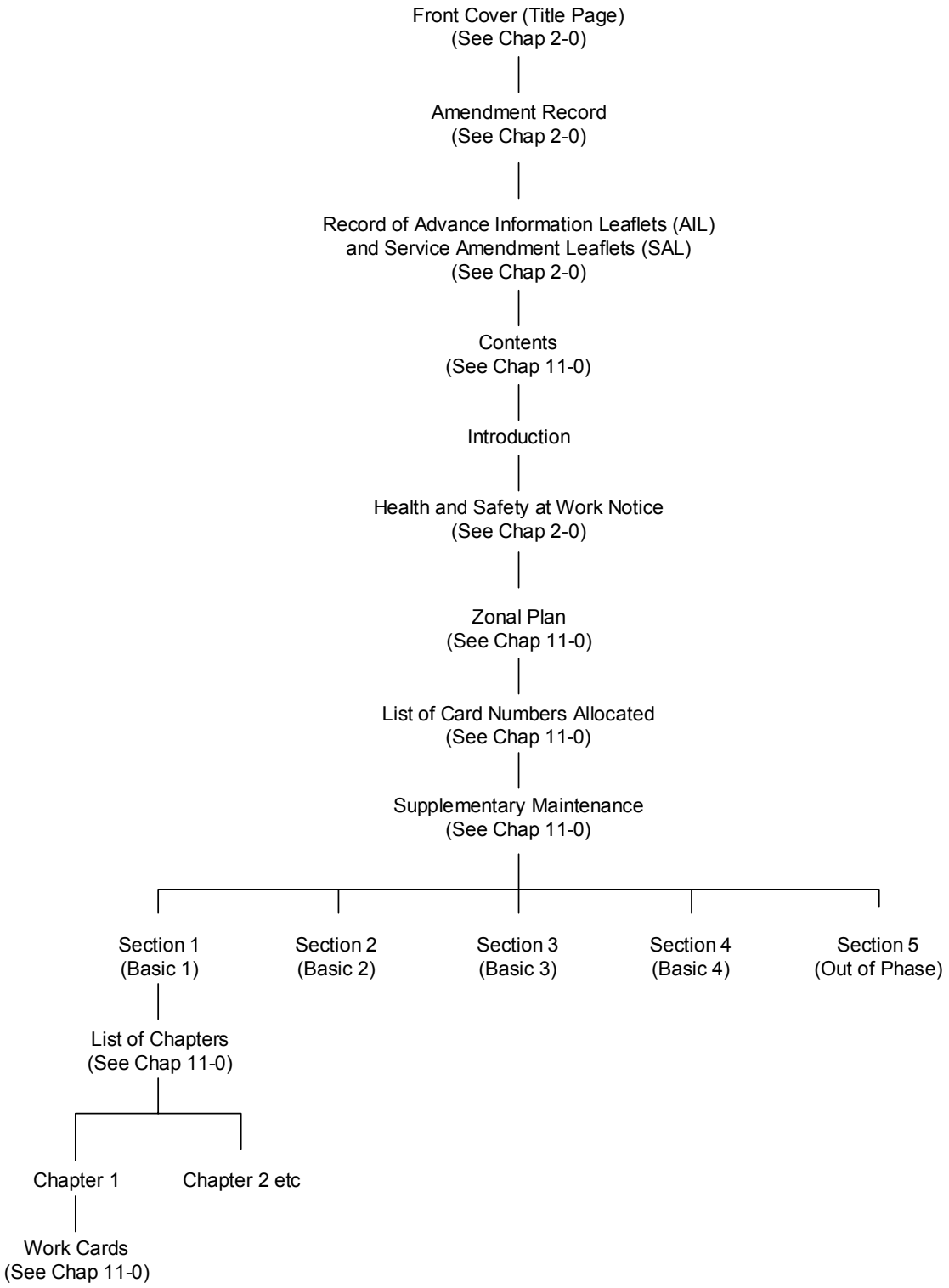

Figure 1 Layout of a build-up style basic maintenance schedule

BASIC MAINTENANCE SCHEDULE AP Code-5C
AIRCRAFT NAME

INTRODUCTION

1 This Topic 5C contains a series of work cards for Basic 1, Basic 2, Basic 3, Basic 4 and Out-of-Phase maintenance.

2 This Topic 5C should be used in conjunction with the AMM, the Topic 5A1 and the Topic 5A2, which contain information on the following:

AMM - Aircraft Maintenance Manual.
5A1 - Master Maintenance Schedule.
5A2 - Hazard and Maintenance Information.

3 When this Topic 5C is in use, all work cards of a higher frequency are done in addition to the lower frequency work cards; ie, B3 = B1 + B2 + B3. The Out-of-Phase work cards are done at the intervals detailed in the Topic 5A1 Section 1 Master Maintenance List (MML).

4 Each item in the Master Maintenance List (MML) is allocated a Scheduled Identification Number (SIN), which identifies the item wherever it appears in the maintenance schedule. Work card assistance, preparation and recovery items are annotated with the aircraft system and sub-system SIN applicable to the item and the last three digits designated ‘000’.

5 When an item is identified as a Structurally Significant Item (SSI) in accordance with ▶MRP RA5720◀, the item description is followed immediately by the identifier '(SSI)'. The identifier is to include the SSI number. SSI lists and illustrations can be found in the Topic 5V.

6 Operations that specify the survey of a zone are to be done by personnel who are authorized in accordance with ▶MAP-01 Chapter 5.3◀.

7 Operations that are not suitable for self-supervision are indicated by the code 'S' appearing in the column headed 'Code'.

8 With the exception of when a separate Topic 5(CTY) Contingency Maintenance Schedule is produced, operations that are done to satisfy contingency maintenance requirements are annotated with the letters 'Cty' in the column headed 'Code'.

9 A ‘List of Card Numbers Allocated’ is included in the preliminary pages of this schedule. Unused card numbers are provided to allow for any future amendment action.

10 New or amended material is indicated by a vertical line in the left hand margin to show the extent of the amendment.

E0018 ( ) Page (ix)/(x)

Figure 2 Example of build-up style Topic 5C basic maintenance schedule introduction page

CHAPTER 11-6

FLEXIBLE OPERATIONS TOPIC 5C BASIC MAINTENANCE SCHEDULE

CONTENTS

Para

1 Introduction
3 Format of flex-ops topic 5C maintenance schedules
4 Preliminary pages
4 Front cover
5 Amendment record
6 Record of Advance Information Leaflets (AIL) and Service Amendment Leaflets (SAL)
7 Contents
8 Introduction
9 Health and safety at work
10 Zonal plan
11 Panel charts
12 Section pages
12 Title page
14 Maintenance operation work card

Figure Page

1 Layout of a flex-ops Topic 5C basic maintenance schedule 4
2 Example of a flex-ops Topic 5C contents page 5
3 Example 1 of a flex-ops Topic 5C introduction page 6
4 Example 2 of a flex-ops Topic 5C introduction page 7
5 Example 1 of a flex-ops Topic 5C panel chart page 8
6 Example 2 of a flex-ops Topic 5C panel chart page 9
7 Example of a flex-ops Topic 5C section title page 10
8 Example 1 of a flex-ops Topic 5C maintenance operations work card 11

INTRODUCTION

1 The Flexible Operations (Flex-ops) Topic 5C Basic Maintenance Schedule contains a series of work cards for use by units in the forward area. The work detailed on the Ops cards can be done in either a periodic or flexible manner in accordance with ►MAP-01 Chapter 5.1◄.

2 To date, the Flex-ops style of maintenance has only been used by the Royal Navy, thus the associated Topic 5C maintenance schedule has retained the format of its naval origins.

FORMAT OF FLEX-OPS TOPIC 5C MAINTENANCE SCHEDULES

3 Flex-ops Topic 5C maintenance schedules consist of a series of preliminary pages followed by a number of Sections as shown in Figure 1. There is one section for each group of maintenance operations contained in the schedule. The maintenance detailed on the work cards of each section may be done all at once in a periodic fashion, or done individually as independent maintenance operations that are spread over an operating period to optimize aircraft availability.

PRELIMINARY PAGES

Front cover

4 The front cover forms the title page of a Flex-ops Topic 5C maintenance schedule. Examples of front covers are presented in Chapter 2-0, Figures 1 to 3.

Amendment record

5 The Amendment Record is a common preliminary page as described in Chapter 2. Examples of A4 size Amendment Records are presented in Chapter 2-0, Figures 4 to 7.

Record of Advance Information Leaflets (AIL) and Service Amendment Leaflets (SAL)

6 The Record of AILs and SALs is a common preliminary page as described in Chapter 2. Examples of A4 size Records of AILs and SALs are shown in Chapter 2-0, Figures 8 to 11.

Contents

7 The Contents page contains a list of headings that summarizes the make up of a Flex-ops Topic 5C maintenance schedule. An example Contents page is shown in Figure 2.

Introduction

8 The introduction describes the type of maintenance package work cards contained in the schedule. It also provides supplementary information regarding their general use and completion. Examples of a Flex-ops Topic 5C maintenance schedule Introduction pages are shown in Figures 3 and 4.

Health and safety at work

9 An example of a maintenance schedule Health and Safety at Work page is shown in Chapter 11-0, Figure 2.

Zonal plan

10 The Zonal Plan defines the various zones contained in an entire aircraft and allocates an appropriate identification number and description to each zone. The Zonal Plan is illustrated in the maintenance schedule preliminary pages only if a zonal plan is not provided in the Aircraft Topic 1. Example pages of a maintenance schedule Zonal Plan are shown in Chapter 11-0, Figures 3 and 4.

Panel charts

11 Panel charts identify the location and nomenclature of each panel fitted to an aircraft. They may also provide information on the access capability that is provided by each panel. Examples of Panel Chart pages are shown in Figures 5 and 6.

SECTION PAGES

Title page

12 The section title page identifies the following:

12.1 The section number.

12.2 The type and frequency of the maintenance operations contained within the section.

12.3 The chapters within the section.

12.4 The range and total numbers of operations work cards allocated to each chapter within the section.

13 An example of a section title page is shown in Figure 7.

Maintenance operation work card

14 The information presented on a maintenance operation work card is similar to that described in Chapter 11-0, but it also includes details of any associated operations work cards. Associated operations are those that may be done at the same time as the forecasted maintenance operation, whenever ease of access,

convenience and out of trade compatibility allow. An example of a maintenance operation work card is shown in Figure 8.

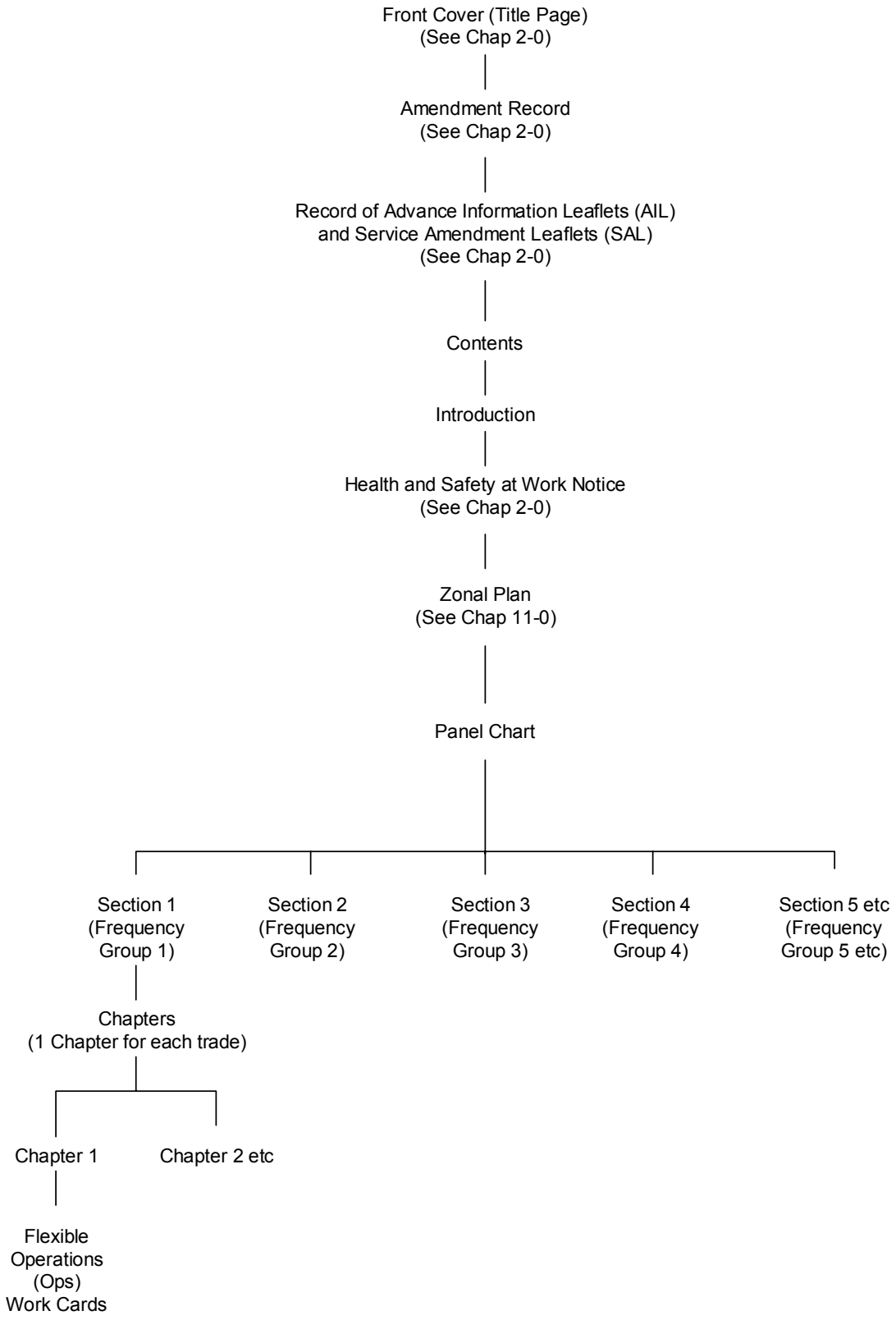

Figure 1 Layout of a flex-ops Topic 5C basic maintenance schedule

BASIC MAINTENANCE SCHEDULE
AIRCRAFT NAME

AP Code -5C

CONTENTS

Preliminary Pages — Page

Title page (Front Cover) ..... (i)/(ii)
Amendment record ..... (iii)/(iv)
Record of Advance Information Leaflet (AIL) Signals ..... (v)/(vi)
Contents (This page) ..... (vii) to (viii)
Introduction ..... (ix) to (x)
Health and safety at work notice ..... (xi)/(xii)
Zonal Plans ..... (xiii) to (xx)
All Marks panel chart ..... (xxi) to (xxxiv)

Basic Maintenance Schedule

Flexible Maintenance Operations :

Section		Frequency	Trade	Op Numbers	Number of Ops
Sect 1	Chap 1	12.5 Hours	M/Ac	001 - 002	2
	Chap 2	12.5 Hours	Av	Nil	Nil
Sect 2	Chap 1	25 Hours	M/Ac	011 - 017	7
	Chap 2	25 Hours	Av	031 - 035	5
Sect 3	Chap 1	50 Hours	M/Ac	051 - 068	18
	Chap 2	50 Hours	Av	091 - 094	4
Sect 4	Chap 1	75 Hours	M/Ac	121 - 124	4
	Chap 2	75 Hours	Av	Nil	Nil
Sect 5	Chap 1	100 Hours	M/Ac	141 - 171	31
	Chap 2	100 Hours	Av	191 - 196	6
Sect 6	Chap 1	150 Hours	M/Ac	221 - 222	2
	Chap 2	150 Hours	Av	Nil	Nil
Sect 7	Chap 1	200 Hours	M/Ac	241 - 276	36
	Chap 2	200 Hours	Av	301 - 304	4
Sect 8	Chap 1	300 Hours	M/Ac	341 - 345	5
	Chap 2	300 Hours	Av	361 - 362	2
Sect 9	Chap 1	400 Hours	M/Ac	381 - 382	2
	Chap 2	400 Hours	Av	Nil	Nil
Sect 10	Chap 1	600 Hours	M/Ac	401 - 402	2
	Chap 2	600 Hours	Av	Nil	Nil
Sect 11	Chap 1	Daily	M/Ac	421 - 423	3
	Chap 2	Daily	Av	Nil	Nil

(Continued overleaf)

E1234 ( ) — Page (vii)

Figure 2 Example 1 of a flex-ops Topic 5C contents page

BASIC MAINTENANCE SCHEDULE AP Code -5C
AIRCRAFT NAME

INTRODUCTION

1 This Topic 5C contains a series of Flexible Operations (Ops) to be done by units in the forward area which enable the schedule to be used in either periodic or flexible form in accordance with ►MAP-01 Chapter 5.1 Paragraph 3.2◄. Any Mark may adopt either periodic or flexible operations maintenance as dictated by Front Line Commands.

2 This Topic 5C is to be used in conjunction with Topics 5A1, 5A2 and 5V which contain information on the following:

2.1 Topic 5A1:

2.1.1 Master Maintenance List.
2.1.2 Component Replacement List.

2.2 Topic 5A2:

2.2.1 Hazard and Maintenance Information

2.3 Topic 5V - Structural Examination Requirements.

3 When this Topic 5C is in use on aircraft with a periodic (block) maintenance policy, all Ops of a higher frequency are to be satisfied in addition to the lower frequency Ops (eg if the maintenance due is the 200 hourly group then this is to include the 100 and 50 hourly groups.

4 When this Topic 5C is in use on aircraft with a flexible maintenance policy, all Ops are done on a continuous basis.

5 When an item is identified as a Structurally Significant Item (SSI) in accordance with ►MRP RA5720◄, the item description is followed immediately by the identifier '(SSI)'. The identifier is to include the SSI number. SSI lists and illustrations can be found in the Topic 5V.

6 Certain maintenance activities are still covered by single service policy. These are indicated by a code in the column headed code on each affected work card. These codes are in addition to the basic trade codes in the header of the Ops. The codes are as follows:

6.1 Maintenance activities on Naval aircraft which may be supervised by any trade supervisor are indicated by the code ‘A’.

6.2 Maintenance activities on Naval aircraft that are corrosion related and for which the manhours expended are to be recorded as such in WRAM are indicated by the code ‘D’.

6.3 Maintenance activities on Naval aircraft that require the assistance of a Non Destructive Test (NDT) supervisor/technician and for which the manhours expended are to be recorded as such in WRAM are indicated by the code ‘N’.

6.4 Maintenance activities on Naval aircraft which are to be supervised by pilot/aircrew undertaking in flight checks are indicated by the code ‘P’.

6.5 Maintenance activities on Naval aircraft deemed as Elementary Self-supervision (ESS) are indicated by the code ‘ESS’.

(Continued overleaf)

E1234 ( ) Page (ix)

Figure 3 Example 1 of a flex-ops Topic 5C introduction page

AP Code -5C

6.6 Zonal maintenance activities on Naval aircraft which are to be done by an authorized zonal surveyor are indicated by the code 'Z'. Detailed instructions on the implementation of zonal maintenance for Naval aircraft are contained in the aircraft Topic 2(NA)1A.

6.7 Maintenance activities on Naval aircraft which may be supervised by either an Electrical, radio or Avionic trade supervisor are indicated by the code 'AV'.

6.8 Maintenance activities on Naval aircraft which may be supervised by either an Electrical or Avionic trade supervisors are indicated by the code 'AV/L'.

6.9 Maintenance activities on Naval aircraft which may be supervised by either Radio or Avionic trade supervisors are indicated by the code 'AV/R'.

7 A sheet headed 'List of Card Numbers Allocated' is shown at the end of these Preliminary pages. Unused card numbers are provided to allow for any future amendment action.

8 New or amended matter will be indicated by a vertical line in the left or right hand margin to show the extent of the amendment. Amendment procedure is detailed in ► MAP-01 Chapter 8.2.1◄.

9 The following abbreviations/codes are used in this schedule:

Ac	Army mechanical trade group
AMM	Aircraft Maintenance Manual
Av	Avionic trade group
Cty	Contingency maintenance
L	RN electrical trade group
M	RN mechanical trade group
N	Non-destructive testing (NDT)
Mk	Mark
Mod	Modification
Op	Flexible Operation (Flex Op)
R	RN radio trade group
SSI	Structurally Significant Item
Stn	Station
WRAM	Work Recording and Asset Management

E1234 (A) Page (x)

Figure 4 Example 2 of a flex-ops Topic 5C introduction page

BASIC MAINTENANCE SCHEDULE
AIRCRAFT NAME

AP Code -5C

PANEL CHART

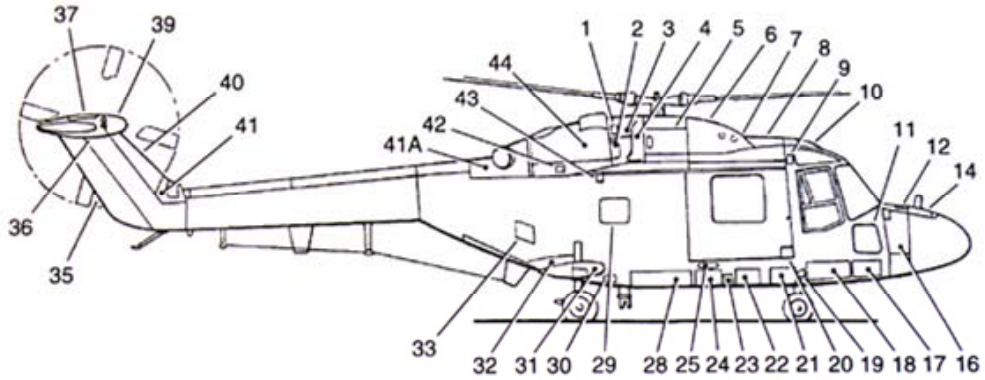

RIGHT SIDE

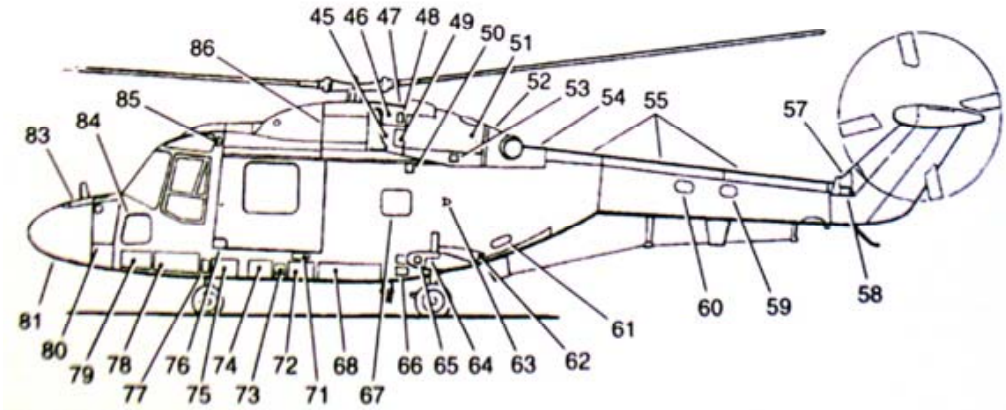

Fig 1 Location of access panels (External top and side surfaces)

E1234 ( ) Page (xix)

Figure 5 Example 1 of a flex-ops Topic 5C panel chart page

BASIC MAINTENANCE SCHEDULE AP Code -5C
AIRCRAFT NAME

PANEL CHART

Item No.	NOMENCLATURE	ACCESS TO	MARK
1	Air intake panel	Oil cooler intake	3, 7, 8, 9
2	Air intake panel right	Engine compressor wash connection	3, 7, 8, 9
3	Air intake cowling top right	Engine compressor	3, 7, 8, 9
4	Air intake cowling bottom right	Engine compressor	3, 7, 8, 9
5	Gearbox footstep fairing right	Main rotor gearbox	3, 7, 8, 9
6	Sliding fairing	Hydraulic components, AC generators, Main rotor control linkage	3, 7, 8, 9
7	Control fairing aft	Rotor brake control cable, Engine controls, Main rotor control linkage	3, 7, 8, 9
8	Control fairing	Rotor brake control cable, Engine controls, Main rotor control linkage	3, 7, 8, 9
9	Access panel right	Cyclic fore-and-aft controls	3, 7, 8, 9
10	Access panel #	Condition lever linkages, Fuel cock linkages, Rotor brake cable linkage	3, 7, 8, 9
11	Transparent panel right	Pilot's rudder bar, Windscreen wiper motor	3, 7, 8, 9
12	Grille panel	Radar cooling (Mks 3 & 8), Heating and ventilation	3, 7, 8, 9
13	Splash shield panel (Below panel 12)	Cockpit ventilation pipe	7, 9
14	Access door, right top nose compartment	Panel AY	3
15	Access panel	ESM aerials	8
16	Access door, right nose compartment	Windscreen washer pump (Mk 3), PID washer system, panel AY (Mk 8), Radar transmitter) Armament relays) (Mks 3 & 8) Radar signal processor) Panel AJ) Transmitters) (Mks 7 & 9) Combining unit)	3, 7, 8, 9
17	Hinged access panel	Cable looms, Navigation lamps flasher/dimmer unit, Pitot/static water drains (Mks 7 & 9)	3, 7, 8, 9

# Denotes caulked panel

E1234 ( ) Page (xxvii)

Figure 6 Example 2 of a flex-ops Topic 5C panel chart page

BASIC MAINTENANCE SCHEDULE
AIRCRAFT NAME

AP Code -5C

SECTION 5

100 HOUR OPERATIONS

		Operation Numbers	Number of Operations
Chapter 1	Mechanical Operations	141 - 170	30
Chapter 2	Avionic Operations	191 - 195	5

:34 ( )

Figure 7 Example of a flex-ops Topic 5C section title page

M/Ac Op Number	BASIC MAINTENANCE SCHEDULE AIRCRAFT NAME 100 HOURS	AP Code -5C Sect 5 Chap 1

INFORMATION IN THE TOPIC 5A2 IS TO BE CONSULTED THROUGHOUT THE WORK DETAILED ON THIS PAGE

Associated Ops	Code
Op 164, Op 166	

BLOCK 1	MAIN ROTOR HEAD AND BLADES - MAIN ROTOR BLADES		
	Zone 420		
5011001	Main rotor blade (4 off) (SSI 047).	Examine (AMM 50-11-00-601).	
5011002	Main rotor blade attachment pin (2 each blade).	Examine (AMM 50-11-00-401).	
5011004	Blade (4 off) bush (4 each blade).	(i) Remove blade .) (ii) Examine.) (AMM 50-11-00-401). (iii) Refit blade.)	
BLOCK 2	MAIN ROTOR HEAD AND BLADES - MAIN ROTOR HEAD		
	Zone 410		
5021014	Blade sleeve extension arm (4 off) bush (4 each extension arm).	Examine (AMM 50-11-00-401 Para C(3)).	

E1234 ( )

Figure 8 Example of a flex-ops Topic 5C maintenance operations work card

CHAPTER 11-7

TOPIC 5(CTY) CONTINGENCY MAINTENANCE SCHEDULE

CONTENTS

Para

1 Introduction
2 Format and layout

Figure Page

1 Layout of a contingency maintenance schedule 2
2 Example of a Topic 5(CTY) contingency maintenance schedule introduction page (recto) .. 3
3 Example of a Topic 5(CTY) contingency maintenance schedule introduction page (verso) ... 4

INTRODUCTION

1 The Topic 5(CTY) Contingency Maintenance Schedule details the essential maintenance activities contained in each maintenance package that must be done during periods when the risk of reduced levels of maintenance may be acceptable. These activities are annotated in the Topic 5A1 Section 1 Master Maintenance List (MML) with the code ‘cty’.

FORMAT AND LAYOUT

2 The Topic 5(CTY) is produced in an A4 landscape format and the general layout is as described in Chapter 11-0. This layout is also illustrated in Figure 1 and a Topic 5(CTY) Introduction is shown in Figures 2 and 3.

3 Unless otherwise directed, the Topic 5(CTY) work cards are produced in MOD Form 707MS format.

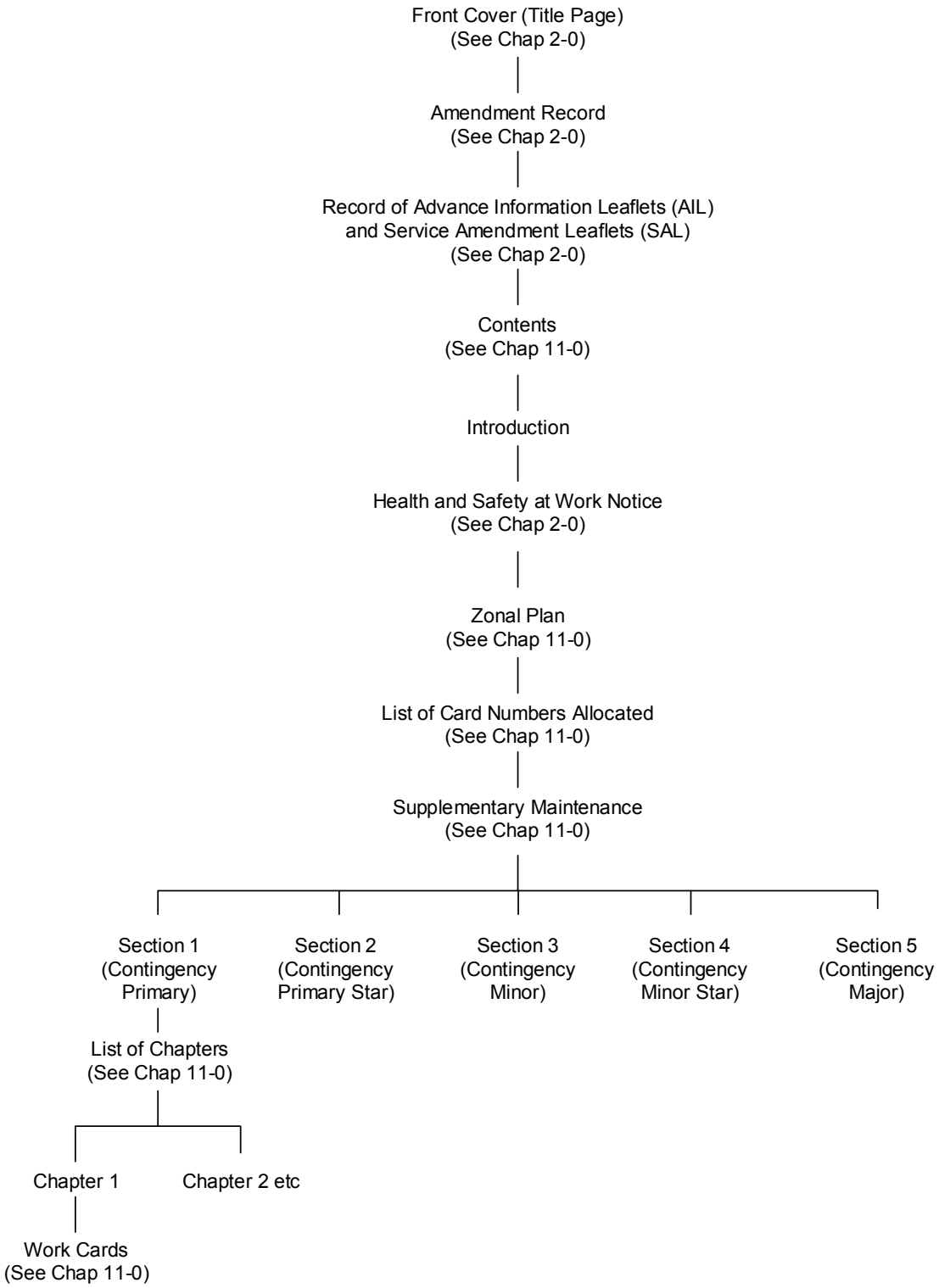

Figure 1 Layout of a contingency maintenance schedule

CONTINGENCY MAINTENANCE SCHEDULE AP Code-5(CTY)
AIRCRAFT NAME

INTRODUCTION

1 The initiation of Contingency (CTY) maintenance is to be in accordance with the aircraft Topic 2(N/A/R/)1.

2 Contingency maintenance is to be done in accordance with the following table in conjunction with instructions detailed in the aircraft Topic 2(N/A/R/)1.

MAINTENANCE	FREQUENCY
Contingency Primary	75 hrs
Contingency Primary Star	150 hrs
Contingency Primary Two Star	300 hrs
Contingency Minor	600 hrs
Contingency Minor Star	1200 hrs
Contingency Major	2400 hrs

3 All maintenance activities are subject to normal anticipation/extension discretionary latitudes, as follows:

a. Aircraft in accordance with the aircraft Topic 2(N/A/R/)1.

b. Components in accordance with ▶MAP-01 Chapter 5.3.1◀.

4 During CTY maintenance, CLR, SOOPMR and Flight Servicing items are to be done in accordance with the aircraft Topic 2(N/A/R/)1.

5 Reversion to normal scheduled maintenance is to be in accordance with the aircraft Topic 2(N/A/R/)1.

6 When this Topic 5(CTY) is in use, all work cards of a higher frequency are done in addition to the lower frequency work cards; eg, Contingency Primary Two Star = Contingency Primary + Contingency Primary Star + Contingency Primary Two Star.

E0018 ( ) Page (ix)

Figure 2 Example of Topic 5(CTY) contingency maintenance schedule introduction page (recto)

AP Code-5C

7 This Topic 5(CTY) should be used in conjunction with the AMM, the Topic 5A1 and the Topic 5A2, which contain information on the following:

AMM - Aircraft Maintenance Manual.
5A1 - Master Maintenance Schedule.
5A2 - Hazard and Maintenance Information.

8 Each item in the Master Maintenance List (MML) is allocated a Scheduled Identification Number (SIN), which identifies the item wherever it appears in the maintenance schedule. Work card assistance, preparation and recovery items are annotated with the aircraft system and sub-system SIN applicable to the item and the last three digits designated ‘000’.

9 When an item is identified as a Structurally Significant Item (SSI) in accordance with ▶MRP RA5720◀, the item description is followed immediately by the identifier '(SSI)'. The identifier is to include the SSI number. SSI lists and illustrations can be found in the Topic 5V.

10 Operations that are not suitable for self-supervision are indicated by the code 'S' appearing in the column headed 'Code'.

11 A ‘List of Card Numbers Allocated’ is included in the preliminary pages of this schedule. Unused card numbers are provided to allow for any future amendment action.

12 New or amended material is indicated by a vertical line in the left hand margin to show the extent of the amendment.

E0018 ( ) Page (x)

Figure 3 Example of Topic 5(CTY) contingency maintenance schedule introduction page (verso)

CHAPTER 11-8

TOPIC 5D MAJOR (OR DEPTH) MAINTENANCE SCHEDULE

CONTENTS

Para

1 Introduction
4 Format and layout

Figure Page

1 Layout of a major or depth maintenance schedule 2
2 Example of a Topic 5D major or depth maintenance schedule introduction page 3

INTRODUCTION

1 The Topic 5D Major Maintenance Schedule contains the maintenance activities detailed in each Major maintenance package.

2 The Topic 5D Major Maintenance Schedule may form part of a combined Basic and Major schedule (5C&D) or part of a combined Primary, Minor and Major Schedule (5B2, C&D). If this is so, then a single set of preliminary pages precedes a series of sections that represent each of the maintenance packages contained in the combined schedule.

3 The Topic 5D Major Maintenance may also be identified as a Topic 5D Depth. When more than one Depth maintenance package exists, they are numbered in sequence; eg, Depth 1 and Depth 2. The associated Topics 5D are also numbered accordingly: eg, Topic 5D1 and Topic 5D2.

FORMAT AND LAYOUT

4 The Topic 5D Major Maintenance Schedule is produced in an A4 landscape format and the general layout is as described in Chapter 11-0. This layout is also illustrated in Figure 1 and a Topic 5D Introduction is shown in Figure 2.

5 Unless directed otherwise, the Topic 5D Major Maintenance Schedule work cards should be produced in MOD Form 707MS format.

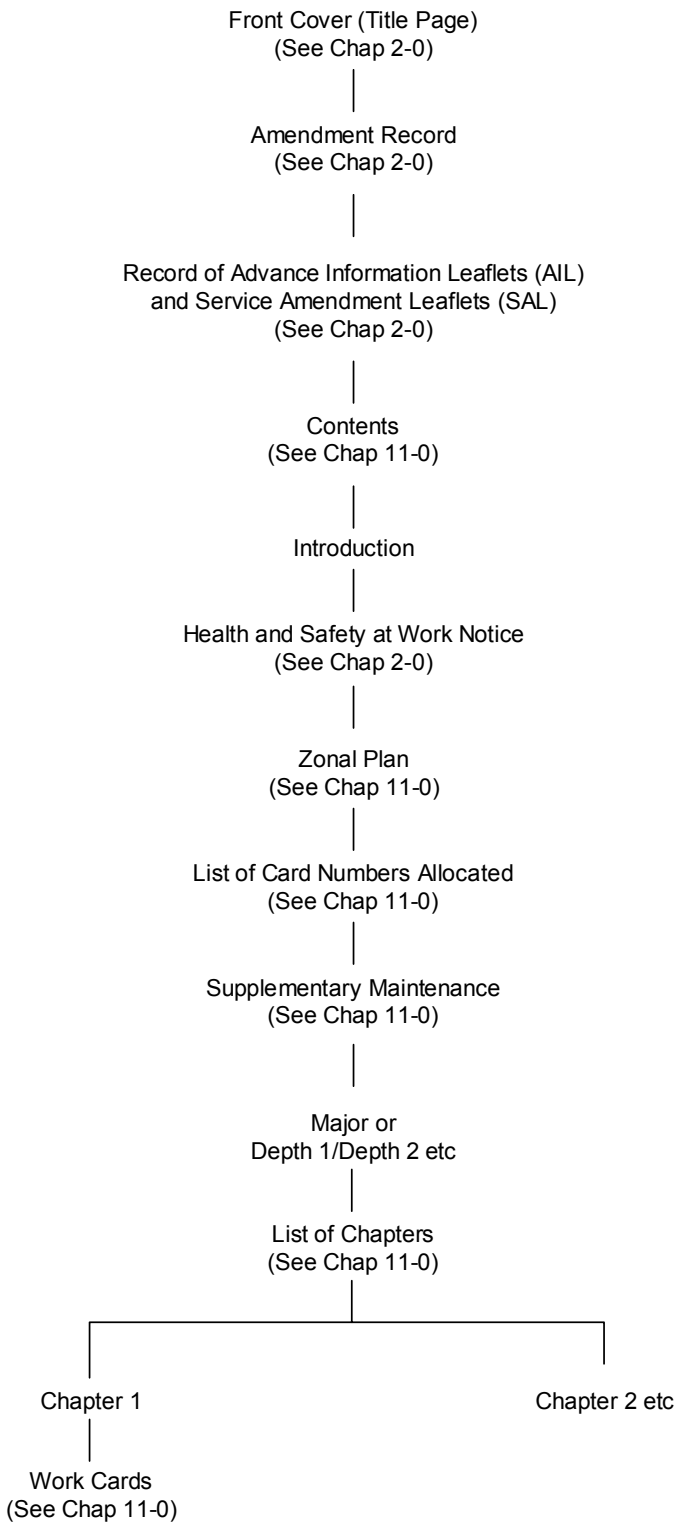

Figure 1 Layout of a major or depth maintenance schedule

INTRODUCTION

1 This Topic 5D contains a series of work cards for Major maintenance.

2 This Topic 5D is to be used in conjunction with the AMM, the Topic 5A1 and the Topic 5A2, which contain information on the following:

AMM - Aircraft Maintenance Manual.
5A1 - Master Maintenance Schedule.
5A2 - Hazard and Maintenance Information.

3 Each item in the Master Maintenance List (MML) is allocated a Scheduled Identification Number (SIN), which identifies the item wherever it appears in the maintenance schedule. Work card assistance, preparation and recovery items are annotated with the aircraft system and sub-system SIN applicable to the item and the last three digits designated ‘000’.

4 When an item is identified as a Structurally Significant Item (SSI) in accordance with ▶MRP RA5720◀, the item description is followed immediately by the identifier '(SSI)'. The identifier is to include the SSI number. SSI lists and illustrations can be found in the Topic 5V.

5 Operations that specify the survey of a zone are to be done by personnel who are authorized in accordance with ▶ MAP-01 Chapter 5.3◀.

6 Operations that are not suitable for self-supervision are indicated by the code 'S' appearing in the column headed 'Code'.

7 A ‘List of Card Numbers Allocated’ is included in the preliminary pages of this schedule. Unused card numbers are provided to allow for any future amendment action.

8 New or amended material is indicated by a vertical line in the left hand margin to show the extent of the amendment.

Figure 2 Example of Topic 5D major or depth maintenance schedule introduction page

CHAPTER 12-0

TOPIC 5F BAY MAINTENANCE SCHEDULE - GENERAL

CONTENTS

Para

1 Introduction
2 Types of equipment
3 Coding
4 Numbering of work cards
5 Layout of work cards
6 Layout of topic 5F bay maintenance schedules

INTRODUCTION

1 Bay maintenance information for aircraft and associated equipment components should be contained in the Topic 1 for the component. Where there is no Topic 1, the relevant designated PT may seek a concession for the production of a Topic 5F.

TYPES OF EQUIPMENT

2 A Topic 5F may be produced to meet the bay maintenance requirements of the following types of equipment:

2.1 Aircraft components (including ejection seats).

2.2 Aircraft role equipment.

2.3 Air armament equipment (conventional).

2.4 Safety and survival equipment (including flying clothing).

CODING

3 The nominated PO is responsible for the coding action of new Topics 5F.

NUMBERING OF WORK CARDS

4 Work cards are to be numbered as detailed in Chapter 1-5.

LAYOUT OF WORK CARDS

5 The text of work cards is divided into blocks as follows:

5.1 A new block is made for each change of work item.

5.2 Each block is individually numbered, each card beginning with block 1.

5.3 Each block is to have a main centre heading indicating the trade responsible.

5.4 The work item is indicated by a sub-heading on the left of the block.

5.5 Work items are numbered sequentially throughout the procedure.

5.6 Work sub-items are to be numbered sequentially throughout the work item using a decimal numbering system.

5.7 In the event of an item extending into the next card the sub-heading is to be repeated and '(Contd)' added.

5.8 Numbering and headings within a block are displayed on both the back and front cards.

LAYOUT OF TOPIC 5F BAY MAINTENANCE SCHEDULES

6 The format of an Aircraft Bay Maintenance Schedule is detailed in Chapter 12-1.

7 The format of a Component Bay Maintenance Schedule is detailed in Chapter 12-2.

CHAPTER 12-1

TOPIC 5F BAY MAINTENANCE SCHEDULE - AIRCRAFT

CONTENTS

Para

1 Introduction
2 Format of aircraft bay maintenance schedules
4 Preliminary pages
4 Front cover
5 Amendment record
6 Record of Advance Information Leaflets (AIL) and Service Amendment Leaflets (SAL)
7 Contents
8 Introduction
9 Health and safety at work
10 List of master maintenance schedule items requiring pre-issue maintenance
11 List of chapters
12 Aircraft Topic 5F chapters
12 Chapter 1
13 Chapter 2 and remaining chapters
17 Layout of work cards

Figure Page

1 Layout of an aircraft Topic 5F bay maintenance schedule 4
2 Example of an aircraft Topic 5F contents page 5
3 Example of an aircraft Topic 5F introduction page 6
4 Example of an aircraft Topic 5F list of items requiring pre-issue maintenance page 7
5 Example of an aircraft Topic 5F list of chapters page 8
6 Example an aircraft Topic 5F section - first chapter 9
7 Example of an aircraft Topic 5F supplementary maintenance card 10
8 Example of an aircraft Topic 5F list of special tools and equipment page 11
9 Example of an aircraft Topic 5F work card 12

INTRODUCTION

1 The general requirements of an aircraft or a component Topic 5F Bay Maintenance Schedule are detailed in Chapter 12-0. This chapter details the specific requirements of an aircraft Topic 5F.

FORMAT OF AIRCRAFT BAY MAINTENANCE SCHEDULES

2 Aircraft bay maintenance schedules consist of a series of preliminary pages followed by a number of Sections. One section is allocated to each trade. When a schedule involves more than one trade, it is allocated to the trade responsible for the major portion of the work, and appears in the section relevant to that trade.

3 Chapter one of each section is an index of schedules for components requiring bay maintenance, followed by a separate chapter for each type of maintenance associated with all the components relevant to the designated section trade. The layout of an Aircraft Bay Maintenance Schedule is shown in Figure 1.

PRELIMINARY PAGES

Front cover

4 The front cover forms the title page of a bay maintenance schedule as explained in Chapter 2-0. Examples of front covers are presented in Chapter 2-0, Figures 1 to 3.

Amendment record

5 The Amendment Record is a common preliminary page as described in Chapter 2-0. Examples of A4 size Amendment Records are presented in Chapter 2-0, Figures 4 to 7.

Record of Advance Information Leaflets (AIL) and Service Amendment Leaflets (SAL)

6 The Record of AILs and SALs is a common preliminary page as described in Chapter 2-0. Examples of A4 size Records of AILs and SALs are shown in Chapter 2-0, Figures 8 to 11.

Contents

7 The Contents page contains a list of headings that summarizes the make up of an aircraft Topic 5F. An example aircraft Topic 5F Contents page is shown in Figure 2.

Introduction

8 The introduction provides supplementary information regarding the general use of an aircraft Topic 5F. An example Topic 5F Introduction page is shown in Figure 3.

Health and safety at work

9 An example of a Health and Safety at Work page is shown in Chapter 11-0 Figure 2.

List of master maintenance schedule items requiring pre-issue maintenance

10 Before a bay maintained item is fitted to an aircraft it is essential that all relevant on-aircraft maintenance applicable to the item has been done, thus giving that component a complete, renewed, life cycle. Such maintenance is termed pre-issue maintenance. A chapter detailing the pre-issue maintenance required on a component is included in the aircraft Bay Maintenance Schedule. Pre-issue maintenance items are also listed in the preliminary pages of the aircraft Topic 5A1. This facilitates a measure of control and crosschecking between the aircraft Topic 5A1 and the relevant Aircraft Topic 5F. An example list of items requiring pre-issue maintenance is shown in Figure 4.

List of chapters

11 The first page of each section is a List of Chapters. An example List of Chapters is shown in Figure 5.

AIRCRAFT TOPIC 5F CHAPTERS

Chapter 1

12 The first chapter of each section is a Reference Index of Maintenance Schedules for Components Requiring Bay Maintenance. An example Chapter 1 is shown in Figure 6.

Chapter 2 and remaining chapters

13 The second and subsequent chapters of each section relate to each type of maintenance associated with the components relevant to the designated section trade.

14 Card 1 of each chapter, excluding chapter one, is a Supplementary Maintenance card. Supplementary Maintenance cards are included to facilitate the listing of other maintenance tasks, such as Technical Instructions, that are to be done at the same time as the scheduled maintenance. An example Supplementary Maintenance card is shown in Figure 7.

15 Card 2 of each chapter, excluding chapter one, lists the special tools, equipment and materials required for the bay maintenance. An example List of Special Tools and Equipment card is shown in Figure 8.

16 The remaining cards of each chapter, excluding chapter one, detail the necessary maintenance operations appropriate to the chapter. These are referred to as work cards.

LAYOUT OF WORK CARDS

17 A standard entry, contained within each work card header, is to direct the user of the schedule to the information contained in the aircraft Topic 5A2.

18 Cards are numbered sequentially throughout the chapter.

19 When an operation detailed within the schedule is hazardous, a suitable warning or caution is entered immediately prior to that operation.

20 Corrective maintenance is not to be included in the aircraft bay maintenance schedule.

21 An example of an aircraft Topic 5F work card produced in MOD Form 707MS format is shown in Figure 9.

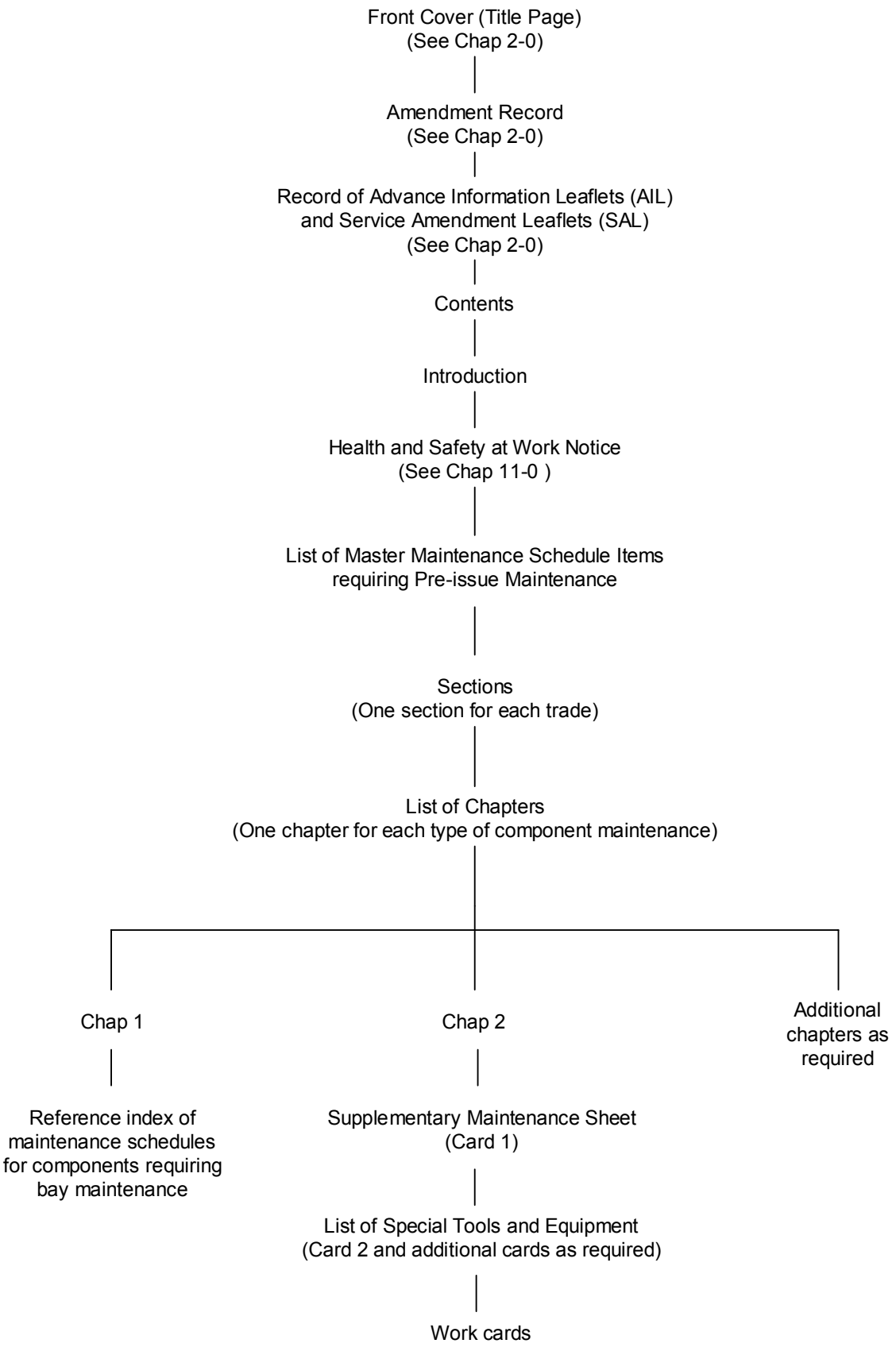

Figure 1 Layout of an aircraft Topic 5F bay maintenance schedule

BAY MAINTENANCE SCHEDULE AP Code-5F
AIRCRAFT NAME

CONTENTS

Preliminary Material Page

Title page ..... (i)/(ii)
Amendment record ..... (iii) and (iv)
Record of Advance Information Leaflets (AIL) and Service Amendment Leaflets (SAL) ..... (v) and (vi)
Contents (This page) ..... (vii)/(viii)
Introduction ..... (ix)/(x)
Health and safety at work ..... (xi)/(xii)
List of master maintenance schedule items requiring pre-issue maintenance..... (xiii)/(xiv)

Sections

1 Mechanical
2 Not issued
3 Avionics
4 Not issued
5 Not issued
6 Not issued
7 Not issued
8 Not issued

E0018 ( ) (vii)/(viii)

Figure 2 Example of an aircraft Topic 5F contents page

BAY MAINTENANCE SCHEDULE AP Code-5F
AIRCRAFT NAME

INTRODUCTION

1 This Topic 5F is the Bay Maintenance Schedule for XXXXXXXX aircraft.

2 The instructions contained in all parts of this schedule do not absolve personnel from the responsibility for acting upon circumstances which may come to their notice indicating the need for additional maintenance.

3 Bay maintenance frequencies are detailed in the aircraft Topic 5A1.

4 New or amended matter will be indicated by a vertical line in the left margin to show the extent of the amendment. Amendment procedure is detailed in ▶MAP-01 Chapter 8.2◀.

E0018 ( ) Page (ix)/(x)

Figure 3 Example of an aircraft Topic 5F introduction page

BAY MAINTENANCE SCHEDULE
AIRCRAFT NAME

AP Code-5F

LIST OF MASTER MAINTENANCE SCHEDULE ITEMS REQUIRING PRE-ISSUE MAINTENANCE

SIN	Item	Trade	Section	Chapter
4900002	APU	Mech	4	2
4910001	Exhaust duct and insulation	Mech	4	2
4910003	APU generator and exhaust duct	Mech	4	2

E0018 ( )

Page (xiii)/(xiv)

Figure 4 Example of an aircraft Topic 5F list of items requiring pre-issue maintenance page

MECHANICAL | BAY MAINTENANCE SCHEDULE | AP Code-5F
AIRCRAFT NAME | Section 1

LIST OF CHAPTERS

	Card No.	No. of Cards
Chapter 1 - Reference Index of Maintenance Schedules for Components Requiring Bay Maintenance	1	1
Chapter 2 - Unpacking and Preparation Gipsy Major Mk 8	1-3	3
Chapter 3 - Dismantling and Packing Gipsy Major Mk 8	1-3	3
Chapter 4 - Pre-Issue Maintenance Gipsy Major Mk 8	1-10	10

E0018 ( )

Figure 5 Example of an aircraft Topic 5F list of chapters page

MECHANICAL
Card 1

REFERENCE INDEX OF MAINTENANCE SCHEDULES
FOR COMPONENTS REQUIRING BAY MAINTENANCE
AIRCRAFT NAME

AP Code-5F
Sect 1
Chap 1

Component	Reference or Part No.	Publication	Remarks
Master Cylinder	ACM15354	105B-1326-5F	
Mainwheel	AH51981	104F-1036-5F	
Brake Unit	AH9220	104J-1051-1) 4515C Vol 3 Pt 1)	
Tailwheel	AH9869 AH5047	104G-1041-1) 4515C Vol 3 Pt 1)	

E1234 (17)

Figure 6 Example an aircraft Topic 5F section - first chapter

MECHANICAL
Card 1

TYPE OF MAINTENANCE
COMPONENT IDENTIFICATION
AIRCRAFT NAME

AP Code-5F
Sect 1
Chap 2

SUPPLEMENTARY MAINTENANCE

Authority	Component or System	Operation	Remarks

E1234 ( )

Figure 7 Example of an aircraft Topic 5F supplementary maintenance card

MECHANICAL | TYPE OF MAINTENANCE | AP Code-5F
Card 2 | COMPONENT IDENTIFICATION | Sect 1
AIRCRAFT NAME | Chap 2

SPECIAL TOOLS AND EQUIPMENT

Sect/Ref	Nomenclature	Qty
1A/9100059	Outside Micrometer 0-1 in.	1
1A/4673773	Spring Balance 0-40 lb	1
1B/9575041	Universal Lubricating Gun	1
or		
1B/1276147	Lubricating Hand Gun 5 oz	1
LM	Adjustable Clamp	1

SPARES

Refer to AP101B-5510-3A

MATERIALS

6850-99-1923613	Lotoxane	As required
34B/2241793	Grease XG-287 (NATO G-354)	As required

E1234 ( )

Figure 8 Example of an aircraft Topic 5F list of special tools and equipment page

MECHANICAL Card 3	BAY MAINTENANCE COMPONENT IDENTIFICATION AIRCRAFT NAME	AP Code-5F Sect 1 Chap 2	Maintenance Record Aircraft or Equipment Serial No:	MOD Form 707MS (Revised Jan 01) Date:

INFORMATION IN THE TOPIC 5A2 IS TO BE CONSULTED THROUGHOUT THE WORK DETAILED ON THIS CARD		Tradesman		Brief Details of suspected fault(s) and SNOW(s)	Supervisor	
Associated Procedures	Code	Man Hrs	Certification and TDM		Man Hrs	Certification and TDM
BLOCK 1 MECHANICAL 1. Preparation 1.1 Introduction. Read.						
BLOCK 2 MECHANICAL 2. Dismantling 2.1 Compression strut to yoke group. (a) Split pin. Remove and discard. (b) Slotted nut.) (c) Bolt.) Remove. (d) Distance piece.) (e) Compression strut. Remove from yoke. 2.2 Axle bolt assembly. (a) Slotted nut.) (b) Towing arm spool) (2 off).) Remove. (c) Distance piece) (2 off).) (d) Axle bolt.)						
E0544(11) Continued						

Figure 9 Example of an aircraft Topic 5F work card

CHAPTER 12-2

TOPIC 5F BAY MAINTENANCE SCHEDULE - COMPONENT

CONTENTS

Para

1 Introduction
2 Format of component bay maintenance schedules
4 Preliminary pages
4 Front cover
5 Amendment record
6 Record of Advance Information Leaflets (AIL) and Service Amendment Leaflets (SAL)
7 Contents
8 Introduction
9 Health and safety at work
10 Control of substances hazardous to health warnings
11 Glossary of terms
12 List of chapters
13 Component Topic 5F chapters
17 Layout of work cards

Figure Page

1 Layout of a component Topic 5F bay maintenance schedule 4
2 Example of a component Topic 5F contents page 5
3 Example of a component Topic 5F introduction page 6
4 Example of a component Topic 5F COSHH warning page 7
5 Example of a component Topic 5F glossary of terms page 8
6 Example of a component Topic 5F list of chapters page 9
7 Example of a component Topic 5F supplementary maintenance card 10
8 Example of a component Topic 5F list of special tools and equipment page 11
9 Example of a component Topic 5F work card 12

INTRODUCTION

1 The general requirements of an aircraft or a component Topic 5F Bay Maintenance Schedule are detailed in Chapter 12-0. This chapter details the specific requirements of a component Topic 5F.

FORMAT OF COMPONENT BAY MAINTENANCE SCHEDULES

2 Component bay maintenance schedules consist of a series of preliminary pages followed by a number of Sections. One section is allocated to each trade. When a schedule involves more than one trade, it is allocated to the trade responsible for the major portion of the work, and appears in the section relevant to that trade. The chapters within each section relate to each type of maintenance required.

3 The layout of a Component Bay Maintenance Schedule is shown in Figure 1.

PRELIMINARY PAGES

Front cover

4 The front cover forms the title page of a bay maintenance schedule as explained in Chapter 2-0. Examples of front covers are presented in Chapter 2-0, Figures 1 to 3.

Amendment record

5 The Amendment Record is a common preliminary page as described in Chapter 2-0. Examples of A4 size Amendment Records are presented in Chapter 2-0, Figures 4 to 7.

Record of Advance Information Leaflets (AIL) and Service Amendment Leaflets (SAL)

6 The Record of AILs and SALs is a common preliminary page as described in Chapter 2-0. Examples of A4 size Records of AILs and SALs are shown in Chapter 2-0, Figures 8 to 11.

Contents

7 The Contents page contains a list of headings that summarizes the make up of a component Topic 5F. An example component Topic 5F Contents page is shown in Figure 2.

Introduction

8 The introduction provides supplementary information regarding the general use of a component Topic 5F. An example Topic 5F Introduction page is shown in Figure 3.

Health and safety at work

9 An example of a Health and Safety at Work page is shown in Chapter 11-0 Figure 2.

Control of substances hazardous to health warnings

10 An example of a Control of Substances Hazardous to Health (COSHH) warnings page is shown in Figure 4.

Glossary of terms

11 The Glossary of Terms for a particular component should be based on the guidance provided in Chapter 1-4 Annex A. An example of a Glossary of Terms page is shown in Figure 5.

List of chapters

12 The first page of each section is a List of Chapters. An example List of Chapters is shown in Figure 6.

COMPONENT TOPIC 5F CHAPTERS

13 The chapters of each section relate to each type of maintenance associated with the designated section trade.

14 Card 1 of each chapter is a Supplementary Maintenance card. Supplementary Maintenance cards are included to facilitate the listing of other maintenance tasks, such as Technical Instructions, that are to be done at the same time as the scheduled maintenance. An example Supplementary Maintenance card is shown in Figure 7.

15 Card 2 of each chapter lists the special tools, equipment and materials required for the bay maintenance. An example List of Special Tools and Equipment card is shown in Figure 8.

16 The remaining cards of each chapter detail the necessary maintenance operations appropriate to the chapter. These are referred to as work cards.

LAYOUT OF WORK CARDS

17 A standard entry, contained within each work card header, is to direct the user of the schedule to the information contained in the aircraft Topic 5F preliminary pages.

18 Cards are numbered sequentially throughout the chapter.

19 When an operation detailed within the schedule is hazardous, a suitable warning or caution is entered immediately prior to that operation.

20 Corrective maintenance is not to be included in the aircraft bay maintenance schedule.

21 An example of an aircraft Topic 5F work card produced in MOD Form 707MS format is shown in Figure 9.

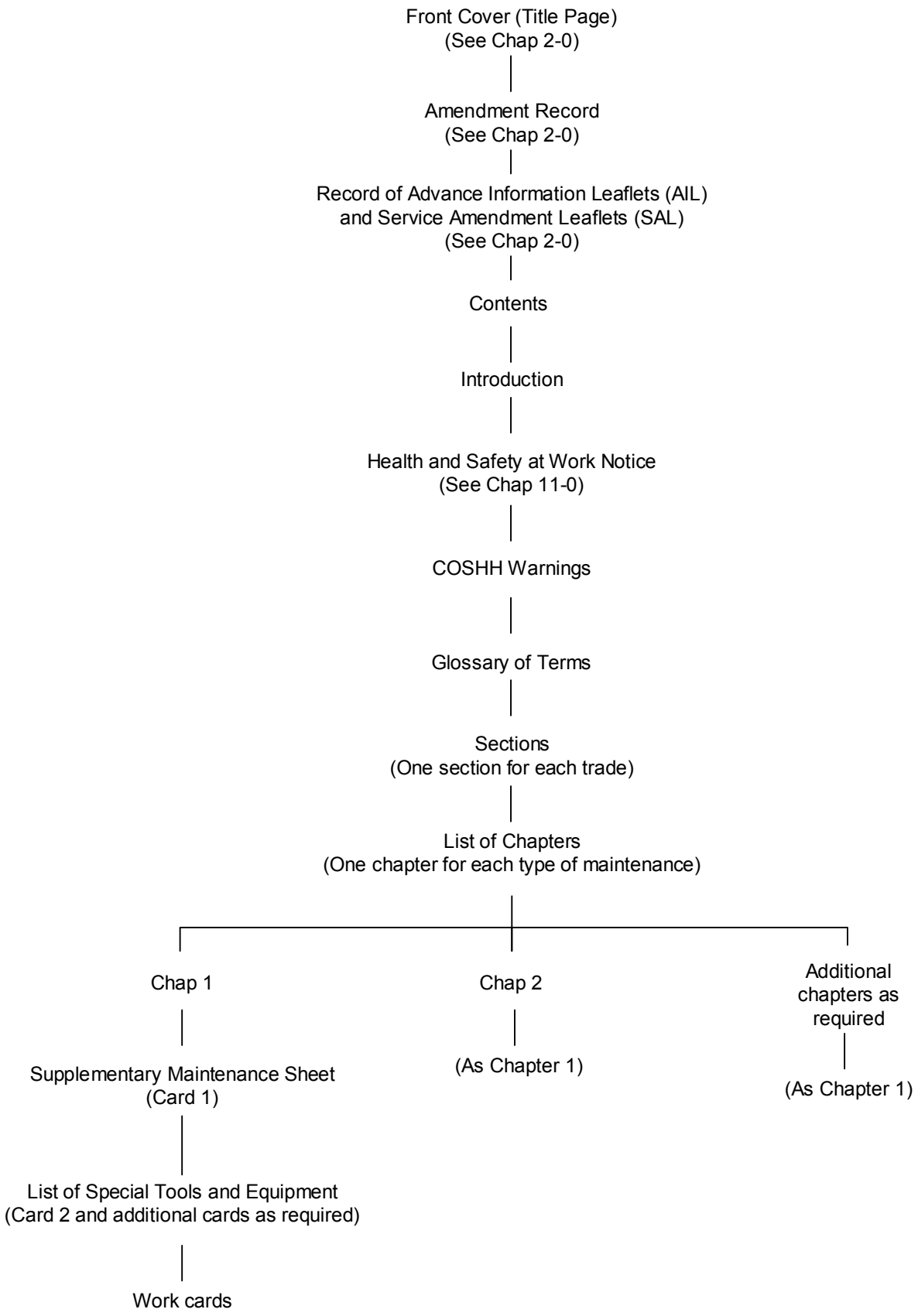

Figure 1 Layout of an component Topic 5F bay maintenance schedule

BAY MAINTENANCE SCHEDULE AP Code-5F
COMPONENT NAME

CONTENTS

Preliminary Material Page

Title page ..... (i)/(ii)
Amendment record ..... (iii) and (iv)
Record of Advance Information LeafletS (AIL) and Service Amendment leaflets (SAL) ..... (v) and (vi)
Contents (This page) ..... (vii)/(viii)
Introduction ..... (ix)/(x)
Health and safety at work ..... (xi)/(xii)
COSHH warnings ..... (xiii)/(xiv)
Glossary of terms ..... (xv) and (xvi)

Sections

1 Not issued
2 Weapons
3 Not issued
4 Not issued
5 Not issued
6 Not issued
7 Not issued
8 Not issued

E0018 ( ) (vii)/(viii)

Figure 2 Example of an component Topic 5F contents page

BAY MAINTENANCE SCHEDULE AP Code-5F
COMPONENT NAME

INTRODUCTION

1 This Topic 5F is the Bay Maintenance Schedule for the (Component name).

2 The instructions contained in all parts of this schedule do not absolve personnel from the responsibility for acting upon circumstances which may come to their notice indicating the need for additional maintenance.

3 Bay maintenance frequencies are detailed in the relevant aircraft Topic 5A1.

4 New or amended matter will be indicated by a vertical line in the left margin to show the extent of the amendment. Amendment procedure is detailed in ▶MAP-01 Chapter 8.2◀.

E0018 ( ) Page (ix)/(x)

Figure 3 Example of an component Topic 5F introduction page

BAY MAINTENANCE SCHEDULE
COMPONENT NAME

AP Code-5F

WARNINGS

CONTROL OF SUBSTANCES HAZARDOUS TO HEALTH

MAKE SURE YOU KNOW THE SAFETY PRECAUTIONS AND FIRST AID INSTRUCTIONS BEFORE YOU USE A HAZARDOUS SUBSTANCE

READ THE LABEL ON THE CONTAINER IN WHICH THE SUBSTANCE IS SUPPLIED

READ THE DATA SHEET APPLICABLE TO THE SUBSTANCE

OBEY THE LOCAL ORDERS AND REGULATIONS

SUBSTANCES INCORPORATED IN THIS EQUIPMENT

Substance	Location	Reference

SUBSTANCES AUTHORIZED FOR USE ON THIS EQUIPMENT

Substance	Location	Reference
Lotoxane	General	ISIS
Loctite 270	Attaching parts	ISIS
Sealant PR1422 B2	Attaching parts	AP 100B-10
Grease anti-seize ZX-38 (NATO S-722)	Attaching parts	AP 100B-10

E0018 ( )

Page (xiii)/(xiv)

Figure 4 Example of an component Topic 5F COSHH warning page

BAY MAINTENANCE SCHEDULE AP Code-5F
COMPONENT NAME

GLOSSARY OF TERMS

1 Glossary Where the following underlined words or phrases appear in the maintenance schedules, they are defined as below:

AUTHORS NOTE: Insert an appropriate Glossary of Terms in accordance with Chapter 1-4 Annex A.

E0018 ( ) Page (xv)/(xvi)

Figure 5 Example of an component Topic 5F glossary of terms page

WEAPONS | BAY MAINTENANCE SCHEDULE | AP Code-5F
COMPONENT NAME | Section 2

LIST OF CHAPTERS

	Card No.	No. of Cards
Chapter 1 - Bay maintenance - (Component name)	1-8	8

E0018 ( )

Figure 6 Example of an component Topic 5F list of chapters page

WEAPONS Card 1	TYPE OF MAINTENANCE COMPONENT NAME	AP Code-5F Sect 2 Chap 1

SUPPLEMENTARY MAINTENANCE

Authority	Operation	Remarks

E1234 ( )

Figure 7 Example of an component Topic 5F supplementary maintenance card

WEAPONS TYPE OF MAINTENANCE AP Code-5F
Card 2 COMPONENT NAME Sect 2
Chap 1

SPECIAL TOOLS AND EQUIPMENT

Sect/Ref	Nomenclature	Qty

E1234 ( )

Figure 8 Example of an component Topic 5F list of special tools and equipment page

WEAPONS Card 4	BAY MAINTENANCE COMPONENT NAME	AP Code-5F Sect 2 Chap 1	Maintenance Record Aircraft or Equipment Serial No: Date:	MOD Form 707MS (Revised Jun 96)

INFORMATION IN THE PRELIMINARY PAGES IS TO BE COMPLIED WITH THROUGHOUT THE WORK DETAILED ON THIS CARD			Tradesman		Brief Details of suspected fault(s) and SNOW(s)	Supervisor	
Associated Cards		Code	Man Hrs	Certification and TDM		Man Hrs	Certification and TDM
BLOCK 1	WEAPONS						
1. Preparation							
1.1 Preliminary pages.	Read.						
BLOCK 2	WEAPONS						
2. Pylon							
2.1 Structure.	Examine.						
E0336(14)	Continued						

Figure 9 Example of an component Topic 5F work card

CHAPTER 13-0

TOPIC 5G NON-DESTRUCTIVE TEST SCHEDULE

CONTENTS

Para

1 Introduction
3 Preliminary pages
3 Front cover
4 Amendment record
5 Record of Advance Information Leaflets (AIL)
6 Record of Service Amendment Leaflets (SAL)
7 Contents
8 Preface and introduction
9 Related and associated publications
10 Warnings and cautions
11 Format of Topic 5G
13 Layout of techniques or work instructions

Figure		Page
1	Layout of a Topic 5G	3
2	Example of a Topic 5G record of AILs and SALs	4
3	Example of a Topic 5G contents page	5
4	Example of a Topic 5G preface and introduction page	6
5	Example of a Topic 5G related and associated publications page	7
6	Example of a Topic 5G warnings page	8
7	Example of a Topic 5G cautions page	9
8	Example of a Topic 5G section list of contents page	10
9	Example 1 of a Topic 5G technique (work instruction) page	11
10	Example 2 of a Topic 5G technique (work instruction) page	12

INTRODUCTION

1 The Topic 5G contains the Non-destructive Test (NDT) procedures for specific aircraft and equipment. The procedures are compiled as a series of work instructions or techniques.

2 The Topic 5G consists of a series of preliminary pages followed by up to six sections, as applicable, where each section represents a particular type of NDT technique. The layout of a Topic 5G is shown in Figure 1.

PRELIMINARY PAGES

Front cover

3 The front cover forms the title page of a Topic 5G. Examples of front covers are presented in Chapter 2-0, Figures 1 to 3.

Amendment record

4 The Amendment Record is a common preliminary page as described in Chapter 2-0. Examples of Amendment Records are presented in Chapter 2-0, Figures 4 to 7.

Record of Advance Information Leaflets (AIL)

5 The Record of AILs is a table to indicate the insertion or deletion of any AILs.

Record of Service Amendment Leaflets (SAL)

6 The Record of SALs is a table to indicate the insertion or deletion of any SALs. The Records of AILs and SALs are published on the same page as shown in Figure 2.

Contents

7 The Contents page contains a list of headings that summarizes the make up of a Topic 5G. An example contents page is shown in Figure 3.

Preface and introduction

8 The Preface and Introduction provides supplementary information regarding the general use of an aircraft Topic 5G. An example of a Topic 5G Preface and Introduction page is shown in Figure 4.

Related and associated publications

9 An example of a Related and Associated Publications page is shown in Figure 5.

Warnings and cautions

10 Examples of Warnings and Cautions are shown in Figure 6 and Figure 7 respectively.

FORMAT OF TOPIC 5G

11 Topics 5G contain the following sections:

11.1 Section 1 - Radiography techniques.

11.2 Section 2 - Ultrasonic techniques.

11.3 Section 3 - Magnetic Particle techniques.

11.4 Section 4 - Eddy Current techniques.

11.5 Section 5 - Aided Visual techniques.

11.6 Section 6 - Laser Shearography techniques.

12 An example of a list of contents page is shown in Figure 8.

LAYOUT OF TECHNIQUES OR WORK INSTRUCTIONS

13 Work Instructions or Techniques are numbered and will remain unchanged for the life of the aircraft concerned or until deleted by amendment action. Adding a suffix letter to the technique number will identify amendment of the technical content of a technique.

14 Where more than one page is required for a technique or work instruction, the pages are to be numbered sequentially, with each page annotated with the page number and the total number of pages in the technique or work instruction.

15 Page headers are to be displayed on the front page of all sheets.

16 When an operation detailed within the procedure is hazardous, an entry is to be made immediately prior to that operation, referring the user of the schedule to the information in the preliminary pages of the Topic 5G and in the aircraft Topic 5A2.

17 The equipment listed is to be the specific equipment with which the technique or work instruction was developed.

18 Examples of Topic 5G work instruction (technique) pages are shown in Figure 9 and Figure 10.

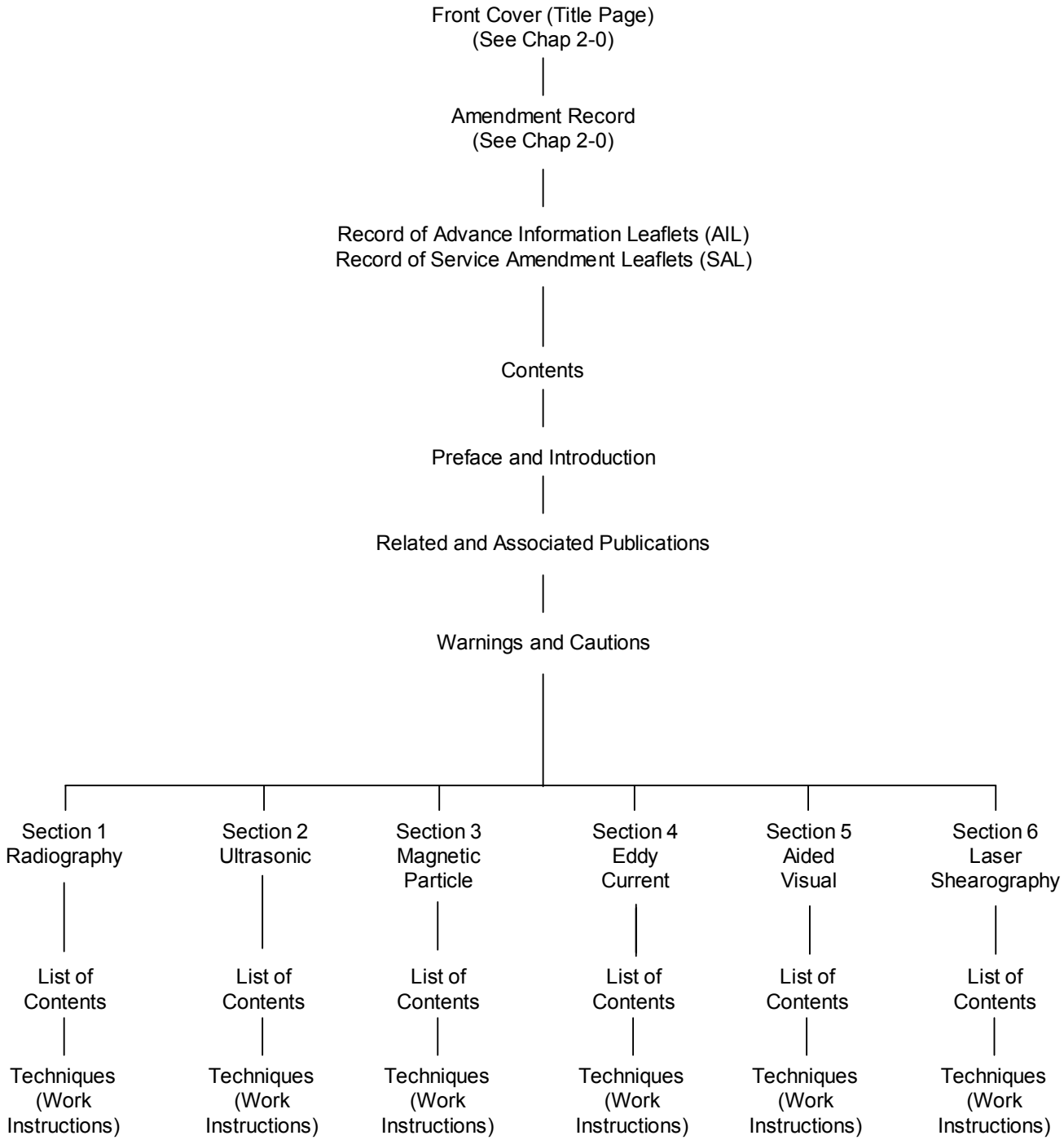

Figure 1 Layout of a Topic 5G

AP Code-5G

RECORD OF ADVANCE INFORMATION LEAFLETS (AIL)

AIL	Date Received	Deleted by Amdt or AIL	AIL	Date Received	Deleted by Amdt or AIL

RECORD OF SERVICE AMENDMENT LEAFLETS (SAL)

AIL	Date Received	Deleted by Amdt or SAL	AIL	Date Received	Deleted by Amdt or SAL

Figure 2 Example of a Topic 5G record of AILs and SALs

AP Code-5G

CONTENTS

PRELIMINARY MATERIAL Page

Front cover (title page) ..... (i)/(ii)
Amendment Record ..... (iii)
Record of Advance Information Leaflets (AIL) ..... (iv)
Record of Service Amendment Leaflets (SAL) ..... (iv)
Contents (this list) ..... (v)/(vi)
Preface and Introduction ..... (vii)
Related and Associated Publications ..... (viii)
Warnings ..... (ix)/(x)
Cautions ..... (xi)/(xii)

SECTIONS

1 Not in use

2 Not in use

3 Magnetic Particle Inspection Techniques

4 Not in use

5 Not in use

6 Not in use

Figure 3 Example of a Topic 5G contents page

PREFACE

1 This Topic 5G contains those Non-destructive Test (NDT) work instructions (Techniques) approved and issued by the (aircraft name) Project Team. These techniques are applicable to Service Aircraft.

INTRODUCTION

1 This Topic 5G has been introduced to support the maintenance operations detailed in the (aircraft name) Topic 5A1 Master Maintenance Schedule. It contains information, orders, instructions and precautions to be observed during NDT operations on the (aircraft name).

2 The information contained in the (aircraft name) Topic 5A2, Hazard and Maintenance Information, and the precautions detailed in this and other applicable publications are to be consulted and complied with throughout the work detailed in this publication.

Figure 4 Example of a Topic 5G preface and introduction page

AP Code-5G

RELATED AND ASSOCIATED PUBLICATIONS

RELATED PUBLICATIONS

►MAP-01	Manual of Maintenance and Airworthiness Processes◄
AP 119A-20001-1	NDT General and Technical Information
AP 119A-20002-1	NDT Safety Precautions
AP 119A-20003-1	NDT Penetrant Flaw Detection
AP 119A-60622-1	NDT Locator 2 Eddy Current Test Set
AP 119A-20518-1	USD 10 Ultrasonic Flaw Detector
JSP 392	Instructions for Radiation Protection
JSP 515	Hazardous Stores Information System

Unclassified YYYY-MM-DD

Page (viii) Issue number: XXX

Figure 5 Example of a Topic 5G related and associated publications page

WARNINGS

HAZARDOUS SUBSTANCES

1 Before using any hazardous substances or material, the user must be conversant with the safety precautions and first aid instructions:

1.1 On the label of the container it was supplied in.

1.2 On the material Safety Data Sheet.

1.3 In local Safety Orders and Regulations

WARNINGS

(1) RADIATION. RADIOACTIVE SOURCES AND X-RAY EQUIPMENT USED DURING RADIOGRAPHIC INSPECTIONS AS DETAILED IN SECTION 1 OF THIS PUBLICATION PRODUCE IONISING RADIATION WHICH HAVE AN ADVERSE EFFECT ON THE HUMAN BODY. EXPOSURE TO RADIATION IS TO BE KEPT AS LOW AS REASONABLY PRACTICABLE AND AT ALL TIMES WITHIN THE LIMITS LAID DOWN. REFER TO JSP 392 AND RISK ASSESSMENTS.

(2) SINTERED BERYLLIUM OXIDE. SOME TECHNIQUES DETAILED IN SECTION 1 OF THIS PUBLICATION MAY USE AN X-RAY SET WITH A SINTERED BERYLLIUM OXIDE WINDOW. ALTHOUGH THIS IS UNLIKELY TO PRESENT A HAZARD IN NORMAL USAGE, THERE COULD BE A HEALTH RISK IF THE TUBE HEAD IS SEVERELY DAMAGED. REFER TO JSP 515 AND RISK ASSESSMENTS.

(3) ULTRAVIOLET LIGHTS. ULTRAVIOLET LIGHTS ARE USED DURING MAGNETIC PARTICLE INSPECTIONS AS DETAILED IN SECTION 3 OF THIS PUBLICATION. ULTRAVIOLET LIGHT IN THE RANGE 4NM TO 270NM IS HARMFUL. IT CAN CAUSE SKIN BURNING, CANCER AND CAN INJURE THE EYES. IT PRODUCES OZONE WHICH IS POISONOUS IN LARGE QUANTITIES. REFER TO AP 119A-20002-1, JSP 515 AND RISK ASSESSMENTS.

(4) MAGNETIC FLAW DETECTORS. PORTABLE MAGNETISING EQUIPMENTS AS DETAILED IN SECTION 3 OF THIS PUBLICATION PRODUCE STRONG MAGNETIC FIELDS, THESE FIELDS ARE CAPABLE OF INDUCING ELECTRICAL CURRENTS INTO ANY ELECTRO-EXPLOSIVE SYSTEM FITTED TO THE AIRCRAFT, SUCH AS WEAPONS SYSTEMS, FUEL TANK EXPLOSIVE SUPPRESSION SYSTEMS, COBRA FIRE SUPPRESSION SYSTEMS. PRIOR TO COMMENCING ANY ON AIRCRAFT MAGNETIC PARTICLE INSPECTION, MAKE SURE THAT ALL ELECTRO-EXPLOSIVE SYSTEMS ARE MADE SAFE. REFER TO CURRENT REGULATIONS AND RISK ASSESSMENTS.

Figure 6 Example of a Topic 5G warnings page

AP Code-5G

CAUTIONS

CAUTIONS

(1) IONISING RADIATION. Erasable Programmable Read Only Memory (EPROM) and electro-optical components fitted to some aircraft operate on the photoelectric principle and are therefore adversely affected by exposure to ionising radiation. The fibre optics used in Remote Viewing Aids (RVA) are also affected by ionising radiation. While radiographic inspections are being done, EPROMs, electro-optical devices and their associated fibre optics must not be operated and all RVA equipment must be removed from the inspection area.

YYYY-MM-DD Unclassified

Issue number: XXX **Page (xi)/(xii)**

Figure 7 Example of a Topic 5G cautions page

AP Code-5G

MAGNETIC PARTICLE TECHNIQUES

LIST OF CONTENTS

Technique Number	Category	Examination Area
XXXXXX/MAG/1	TECHNICIAN	ENGINE MOUNTING FRAMES
XXXXXX/MAG/2	TECHNICIAN	ENGINE FRAME SUPPORT ATACHMENT LUG

Figure 8 Example of a Topic 5G section list of contents page

AP Code-5G

MAGNETIC TECHNIQUE No. 1

This Technique Must Be Done by An NDT Technician

1 Technique

XXXXXX/MAG/1.

2 Component to be examined

Engine mounting frames (Fig 1).

3 Area to be examined

Lower engine attachment points (Port and starboard).

4 Purpose of examination

To detect cracking in welds and surrounding tube.

5 Equipment required

Permanent Magnet Type 813 capable of a pull-off value of 16-18 psi 4XM 1126454
APMI black ink 6635-99-2031829
White contrast paint 8010-99-8087707
Solvent Remover 6850-99-524309
Magnetic Field Indicator 4XM 2143104
PPLOM 2 magnet tester 4XM 830152

WARNINGS

(1) MAGNETIC INKS ARE USED IN THE MAINTENANCE OF THIS AIRCRAFT. REFER TO THE MAGNETIC INK WARNING IN THE PRELIMINARY PAGES OF THIS PUBLICATION AND THE HAZARDOUS SUBSTANCES INFORMATION SYSTEM (HSIS).

(2) SOLVENT REMOVER IS USED IN THE MAINTENANCE OF THIS AIRCRAFT. REFER TO THE SOLVENT REMOVER WARNING IN THE PRELIMINARY PAGES OF THIS PUBLICATION AND THE HSIS.

6 Preparation

6.1 Make sure that the inboard and outboard engine cowlings have been removed for access.

6.2 Make sure that the inspection area has been thoroughly cleaned, degreased, and is free from jointing compound, PRC and flaking paint.

7 Examination procedure

7.1 Make sure that welds and the surrounding tube are demagnetized.

YYYY-MM-DD Unclassified **Section 3**
Issue number: XXX **Page 1 of 4**

Figure 9 Example 1 of a Topic 5G technique (work instruction) page

7.2 Do a check of the 813 magnet using the PLOM 2 in accordance with AP 119A-20001-1 Chap 4 Annex B or use lift-off weights as detailed in Para 11.2.

7.3 Position the magnet on the frame opposite the flexible engine mounting to straddle the inspection area (Fig 2). Apply APMI magnetic ink and allow 20 seconds for particle migration. Examine area for fault indications (See Para 11.1).

7.4 Repeat operation 7.3 on opposite side of frame.

7.5 Repeat operations 7.1 to 7.4 on the other engine frame.

7.6 Completion. Demagnetize and remove all traces of magnetic ink.

8 Examination standard

Report all fault indications, stating their position and length.

9 Reporting procedure

In accordance with current maintenance instructions.

10 Estimated man-hours

Two hours, examination only.

11 Additional information

11.1 Do a full 360 degree examination of the weld and surrounding tube. Suspect faults are to be confirmed where applicable by removing the paint finish in the inspection area using non-mechanical methods and inspecting the area again.

11.2 The minimum lift-off weight for the 813 magnet is 12.5 to 25 lbs (5.7 to 11.5 kg).

12 Validation

This technique is a re-write of XXXXXX/MAG/1A, which was developed on cracked engine mounting frame Ser No. PBN 03C and validated on (aircraft name) aircraft (Ser No).

Figure 10 Example 2 of a Topic 5G technique (work instruction) page

CHAPTER 14-0

TOPIC 5G1 VIBRATION ANALYSIS TECHNIQUES

CONTENTS

Para

1 Introduction
3 Preliminary pages
3 Front cover
4 Amendment record
5 Record of Advance Information Leaflets (AIL)
6 Record of Service Amendment Leaflets (SAL)
7 Contents
8 Preface
9 Related and associated publications
10 Warnings and cautions
11 Instructions to users
12 Abbreviations
13 Layout of techniques or work instructions

Figure		Page
1	Layout of a Topic 5G1	3
2	Example of a Topic 5G1 contents page	4
3	Example of a Topic 5G1 preface page	5
4	Example of a Topic 5G1 related and associated publications page	6
5	Example of a Topic 5G1 warnings and cautions page	7
6	Example of a Topic 5G1 instructions to users page	8
7	Example of a Topic 5G1 abbreviations page	9
8	Example of a Topic 5G1 vibration analysis technique page	10

INTRODUCTION

1 The Topic 5G1 contains the vibration analysis procedures for specific aircraft and equipment. The procedures are compiled as a series of work instructions or techniques.

2 The Topic 5G1 consists of a series of preliminary pages followed by each particular vibration analysis technique. The layout of a Topic 5G1 is shown in Figure 1.

PRELIMINARY PAGES

Front cover

3 The front cover forms the title page of a Topic 5G1. Examples of front covers are presented in Chapter 2-0 Figures 1 to 3.

Amendment record

4 The Amendment Record is a common preliminary page as described in Chapter 2-0. Examples of Amendment Records are presented in Chapter 2-0, Figures 4 to 7.

Record of Advance Information Leaflets (AIL)

5 The Record of AILs is a table to indicate the insertion or deletion of any AILs.

Record of Service Amendment Leaflets (SAL)

6 The Record of SALs is a table to indicate the insertion or deletion of any SALs. An example of a Record of AILs and SALs is shown in Chapter 13-0 Figure 2.

Contents

7 The Contents page contains a list of headings that summarizes the make up of a Topic 5G1. An example Contents page is shown in Figure 2.

Preface

8 The Preface provides supplementary information regarding the general use of an aircraft Topic 5G1. The Preface is to make reference to the information contained in the (Aircraft name) Topic 5A2, Hazard and Maintenance Information, which contains the glossary of terms that is applicable to all Topics 5 publications as defined in Annex A to Chapter 1-4 of this publication. An example of a Topic 5G1 Preface page is shown in Figure 3.

Related and associated publications

9 An example of a Related and Associated Publications page is shown in Figure 4.

Warnings and cautions

10 Examples of Warnings and Cautions are shown in Figure 5.

Instructions to users

11 An example Instructions to Users page is shown in Figure 6.

Abbreviations

12 An example Abbreviations page is shown in Figure 7.

LAYOUT OF TECHNIQUES OR WORK INSTRUCTIONS

13 Techniques are numbered and will remain unchanged for the life of the aircraft concerned or until deleted by amendment action. Adding a suffix letter to the technique number will identify amendment of the technical content of a technique.

14 Where more than one page is required for a technique or work instruction, the pages are to be numbered sequentially, with each page annotated with the page number and the total number of pages in the technique or work instruction.

15 Page headers are to be displayed on the front page of all sheets.

16 When an operation detailed within the procedure is hazardous, an entry is to be made immediately prior to that operation, referring the user of the schedule to the information in the preliminary pages of the Topic 5G and in the aircraft Topic 5A2.

17 The equipment listed is to be the specific equipment with which the technique or work instruction was developed.

18 An example of a Topic 5G1 technique (work instruction) page is shown in Figure 8.

Front Cover (Title Page)
(See Chap 2-0)

Amendment Record
(See Chap 2-0)

Record of Advance Information Leaflets (AIL)
Record of Service Amendment Leaflets (SAL)
(See Chap 13-0)

Contents

Preface

Related and Associated Publications

Warnings and Cautions

Instructions to Users

Glossary of Terms and
Abbreviations

Techniques
(Work Instructions)

Figure 1 Layout of a Topic 5G1

AP Code-5G1

CONTENTS

PRELIMINARY MATERIAL Page

Front cover (title page) ..... (i)/(ii)
Amendment record ..... (iii)
Record of Advance Information Leaflets (AIL) ..... (iv)
Record of Service Amendment Leaflets (SAL) ..... (iv)
Contents (This page) ..... (v)
Preface ..... (vii)
Related and associated publications ..... (viii)
Warnings ..... (ix)
Cautions ..... (ix)
Instructions to users ..... (x)
Abbreviations ..... (xi)/(xii)

VIBRATION TECHNIQUES

Vibration Technique No. 1	(VB 1)	Tail Rotor Balance.
Vibration Technique No. 2	(VB 2)	To be issued.
Vibration Technique No. 3	(VB 3)	High Speed Shaft.
Vibration Technique No. 4	(VB 4)	To be issued.
Vibration Technique No. 5	(VB 5)	Ground Track.
Vibration Technique No. 6	(VB 6)	Track and Vibration Survey.
Vibration Technique No. 7	(VB 7)	Tail Rotor Drive Shaft Fault Diagnosis.
Vibration Technique No. 8	(VB 8)	To be issued.
Vibration Technique No. 9	(VB 9)	Main Rotor Head Lateral Balance.
Vibration Technique No. 10	(VB 10)	Tail Rotor Drive Shaft (VCC use only).
(Aircraft name)/HUMS Technique/1	(HT 1)	Airframe Rotating Components.
(Aircraft name)/HUMS Technique/1	(HT 1)	Tail Rotor.
(Aircraft name)/HUMS Technique/1	(HT 1)	Main Rotor.
(Aircraft name)/HUMS Technique/1	(HT 1)	Tail Rotor Drive Shaft.
(Aircraft name)/HUMS Technique/1	(HT 1)	Airframe Battery Vibration Absorber Tuning.

ANNEXES

Annex A	High speed shaft chart
Annex B	Rectification flow charts
Annex C	Fault coding flow charts
Annex D	Rotor order sheet
Annex E	Vibration report proformae/limit sheet

Page (vii)

Figure 2 Example of a Topic 5G1 contents page

AP Code-5G1

PREFACE

1 This Topic 5G1 contains those Vibration Techniques approved and issued by the (Aircraft name) Project Team. These Vibration Techniques are applicable to Service aircraft.

2 Current regulations must be used for raising, issuing, superseding and cancelling Vibration Techniques. New or amended matter is shown by vertical lines in the left hand margin. Amendment procedure is detailed in ►MAP-01 Chapter 8◄.

3 When a new technique is inserted, vertical lines will not be used. The amendment state of the page will be indicated by the amendment number and the amendment date at the foot of the page.

4 References to Service Modification in this publication are subject to the conditions in the caveat that follows:

4.1 This publication may contain information on systems and equipment embodied on the aircraft by Service Modification issued with the authority of the platform Project Team Leader.

4.2 (Designer/Publication Organization Name), in producing this manual under contract from the platform PT takes no responsibility for the accuracy of the data included for Service Modifications, and the inclusion of such data does not constitute designer endorsement.

4.3 Service Modifications include Installation Modifications and Special Trial Fits.

5 The information contained in the (Aircraft name) Topic 5A2, Hazard and Maintenance Information, and the precautions detailed in this and other applicable publications are to be consulted and complied with throughout the work detailed in this publication.

Page (vii)

Figure 3 Example of a Topic 5G1 preface page

AP Code-5G1

RELATED AND ASSOCIATED PUBLICATIONS

RELATED PUBLICATIONS

►MAP-01	Manual of Maintenance and Airworthiness Processes◄
AP Code XXXX-XXXX-15 series	Aircrew Manuals
AP Code XXXX-XXXX-XX series	Aircraft Maintenance Manuals
AP Code XXXX-XXXX-5A1	Master Maintenance Schedule
AP Code XXXX-XXXX-5A2	Hazard and Maintenance Information

Page (viii)

Figure 4 Example of a Topic 5G1 related and associated publications page

AP Code-5G1

WARNINGS

WARNINGS

HAZARDOUS SUBSTANCES

1 Before using any hazardous substances or material, the user must be conversant with the safety precautions and first aid instructions:

1.1 On the label of the container it was supplied in.

1.2 On the material Safety Data Sheet.

1.3 In local Safety Orders and regulations

WARNINGS

(1) ELECTRICAL CIRCUITS. BEFORE ANY ELECTRICAL CIRCUIT IS DISTURBED OR DISCONNECTED, ALL INTERNAL AND EXTERNAL POWER SUPPLIES ARE TO BE DISCONNECTED. POWER SUPPLIES ARE TO BE CONNECTED AGAIN ONLY WHEN THE PERSON RESPONSIBLE FOR EMBODYING OR INSPECTING THE INSTALLATION IS SATISFIED THAT ALL ACTION HAS BEEN DONE TO MAKE THE AIRCRAFT SAFE.

(2) OIL OMD-160. OIL OMD-160 IS USED IN THE MAINTENANCE OF THIS AIRCRAFT. REFER TO JSP 515 AND RISK ASSESSMENTS.

CAUTIONS

CAUTIONS

(1) Over-torqueing the vertical bolt will result in damage to the adapter block helicoil insert.

(2) Permanent damage to the infra-red light source will result if the DAU rotary switch is left in the test position for more than 10 seconds.

(3) Only fit a maximum of 5 tip weights to any blade or 10 weights to 2 adjacent blades in the rotor system.

Page (ix)

Figure 5 Example of a Topic 5G1 warnings and cautions page

AP Code-5G1

INSTRUCTIONS TO USERS

TESTING TECHNIQUE

1 The test techniques contain all the relevant information and references required for the test that must be completed in the designated sequence.

RETURNS - VIBRATION ANALYSIS

2 Helicopter vibration analysis data returns are to be forwarded as follows:

2.1 (Enter a list of return addresses as required).

Page (x)

Figure 6 Example of a Topic 5G1 instructions to users page

AP Code-5G1

ABBREVIATIONS

AVM	Anti-vibration Mounting
CADU	Control and Display Unit
CCM	Credit Card Memory
CPSR	Co-pilot's Seat Rail
DAU	Data Acquisition Unit
ECU	Engine Change Unit
HSC	HUMS Support Cell
Hz	Hertz
ID	Identity
in.	inches
ips	inches per second
ISC	Inter Seat Console
LED	Light Emitting Diode
MPOG	Minimum Pitch on Ground
MRGB	Main Rotor Gearbox
MRH	Main Rotor Head
MRB	Main Rotor Blade
OPU	Optical Pick Up
RADS-AT	Rotor Analysis Diagnostics - Advanced Technology
SOOPM	Scheduled and Out-of-Phase Maintenance
TRDS	Tail Rotor Drive Shaft
TRGB	Tail Rotor Gearbox
UTD	Universal Tracking Device
VCC	Vibration Control Cell

Page (xi)/(xii)

Figure 7 Example of a Topic 5G1 abbreviations page

AP Code-5G1

(AIRCRAFT NAME) VIBRATION TECHNIQUE No. 1

1	**TECHNIQUE**	VB 1
2	**COMPONENT TO BE EXAMINED**	Tail Rotor Assembly.
3	**PURPOSE OF TEST**	(1) To measure and record tail rotor balance information. (2) To generate balance adjustments to the tail rotor.
4	**EQUIPMENT REQUIRED**	(1) RADS-AT 4XV 8756898 (2) TRGB filler plug 26SH 7320344 (3) Adapter kit 4XV 0160843 (4) Ty-wrap 10AR 7958219 (5) Wire locking C126 30A 6363057 (6) Reflective tape 4XV 3344357

5 PREPARATION

WARNING

(1) ELECTRICAL CIRCUITS. BEFORE ANY ELECTRICAL CIRCUIT IS DISTURBED OR DISCONNECTED, ALL INTERNAL AND EXTERNAL POWER SUPPLIES ARE TO BE DISCONNECTED. POWER SUPPLIES ARE TO BE CONNECTED AGAIN ONLY WHEN THE PERSON RESPONSIBLE FOR EMBODYING OR INSPECTING THE INSTALLATION IS SATISFIED THAT ALL ACTION HAS BEEN DONE TO MAKE THE AIRCRAFT SAFE.

5.1	Tail rotor hub and blades.	(1) Clean (AMM). (2) Lubricate (AMM). (3) Remove all weights from the tail rotor hub (AMM).
5.2	OPU bracket.	Fit to TRGB output fairing at the 6 o'clock position using the second and third outboard screws (Fig 1).

NOTE

Care should be taken when securing the OPU, as the plastic thread is easily damaged.

5.3	OPU.	Fit to OPU bracket with cable facing inboard as shown (Fig 1).
5.4	TRGB filler plug.	Make sure that it is fitted and wire locked (AMM).
5.5	Installation of accelerometer.	(1) Install the Triax accelerometer on the TRGB filler plug with its connector pointing forward (Fig 2). (2) Make sure that the arrow 'C' on the accelerometer is pointing upwards and a washer is fitted under the head of the captive bolt. (3) Wire lock the captive bolt to the accelerometer to make sure that it is positively locked. (4) Torque load the accelerometer bolt to 80 lbs in.
5.6	Accelerometer cable.	Connect the 50 ft accelerometer cable to the accelerometer and then ty-wrap the cable to the TRGB upper grill.
5.7	Reflective tape.	Select a 'Target' blade and apply a strip of clean reflective tape (1 in), in line with the OPU, to the inboard side.

VB 1
Page 1 of 14

Figure 8 Example of a Topic 5G1 vibration analysis technique page

CHAPTER 15-0

AIRCRAFT STORAGE SCHEDULES - GENERAL

CONTENTS

Para

1 Introduction

Table Page

1 Aircraft Storage Schedules 2

Figure Page

1 Layout of a combined Topic 5LNP&Q 3
2 Example of a combined Topic 5LNP&Q contents page 4

INTRODUCTION

1 Aircraft storage schedules are produced to make sure that aircraft are properly prepared, maintained and recovered during periods when they are allotted to any category of reserve storage. There are four categories of reserve, as follows:

1.1 Reception (RECN).

1.2 Immediate Readiness Reserve (IRR).

1.3 Short Term Reserve (STR).

1.4 Long Term Reserve (LTR).

2 JAP 100V-21, the Joint Service Manual of Aircraft Storage, defines the categories of reserve, details the minimum storage maintenance requirements and describes the associated procedures and practices. In addition, storage schedules should comply with the requirements of the following publications:

2.1	►MAP-01	Manual of Maintenance and Airworthiness Processes◄.
2.2	AP 100E-01B	Military Aviation Engineering - Management of Aero Engines.
2.3	AP 102 series/Topic 7	Aero Engine Preservation, by types.
2.4	JAP(D) 100C-22	Guide to Developing and Sustaining Preventive Maintenance Programmes.

3 The content of aircraft storage schedules was originally based solely on the requirements stipulated in AP 100V-20, the Joint Service Manual of Aircraft Storage (the predecessor to JAP 100V-21). However, the policy stipulated in ►MAP-01 Chapter 8.1.1◄ requires that aircraft preventive maintenance programmes are derived using Reliability Centred Maintenance (RCM) methodology - this includes the maintenance programmes for aircraft allotted to a category of storage reserve. Consequently, aircraft storage schedules are now derived using the RCM methodology, whilst also adhering to the requirements stipulated in JAP 100V-21. The introduction of RCM into the development of aircraft storage schedules also heralded a marked change in the format and presentation of the schedules themselves, which is as described in the relevant chapters of this publication. The schedules format and presentation described herein are applicable to both fixed and rotary wing aircraft.

4 Table 1 shows the various topics of aircraft storage schedule in use and the associated chapter numbers within this publication that describes them in more detail.

TABLE 1 AIRCRAFT STORAGE SCHEDULES

TITLE	TOPIC	CHAPTER
Storage Maintenance Schedule	5L	15-1
Preparation for Storage	5N	15-2
Maintenance During Storage	5P	15-3
Recovery from Storage	5Q	15-4

5 Topics 5L, 5N, 5P and 5Q may be produced as sub-topics in a combined publication; ie, a Topic 5NLP&Q; or as discrete stand-alone publications, depending on the size of the work content involved.

6 The layout of a combined Topic 5LNP&Q is shown in Figure 1 and an example of a Topic 5LNP&Q contents page is shown in Figure 2.

7 A combined Topic 5LNP&Q may include a Zonal Plan, which defines the various zones contained in an entire aircraft and allocates an appropriate identification number and description to each zone. The Zonal Plan is illustrated in the combined Topic 5LNP&Q preliminary pages only if a zonal plan is not provided in the Aircraft Topic 1 (AMM). Example pages of a maintenance schedule Zonal Plan are shown in Chapter 3-1, Figure 21 and Figure 22.

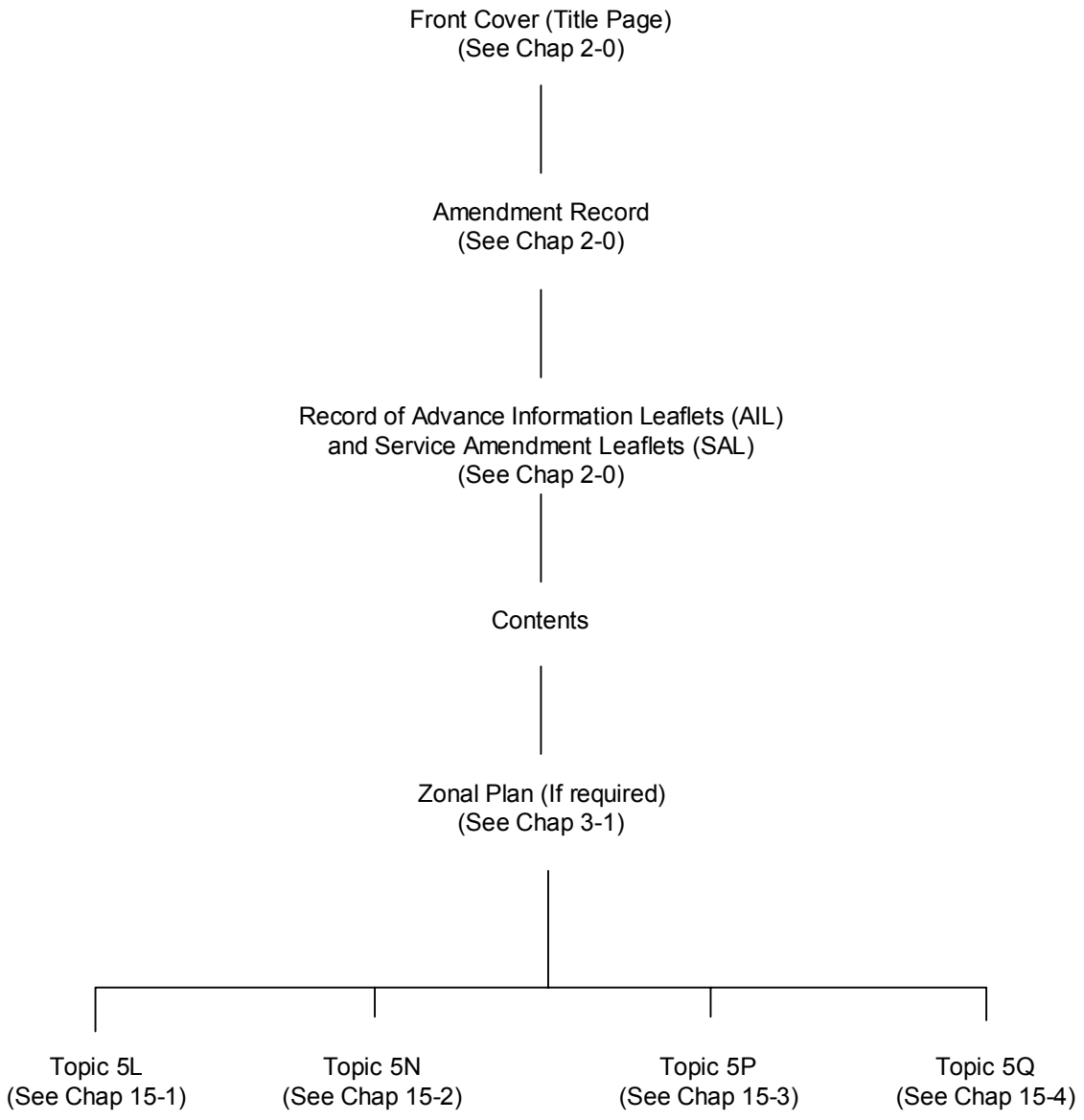

Figure 1 Layout of a combined Topic 5LNP&Q

STORAGE SCHEDULES
AIRCRAFT NAME

AP Code-5LNP&Q

CONTENTS

Preliminary Material — Page

Title page ..... (i)/(ii)
Amendment record ..... (iii)/(iv)
Record of Advance Information Leaflets (AIL)and Service Amendment Leaflets (SAL) ..... (v)/(vi)
Contents (This page) ..... (vii)/(viii)
Zonal plan (If required) ..... (ix) and (x)

This Publication is Sub-divided into 4 Topics

1 Topic 5L - Storage Maintenance Schedule
2 Topic 5N - Preparation for Storage
3 Topic 5P - Maintenance during Storage
4 Topic 5Q - Recovery from Storage

E01234 ( )

Page (vii)/(viii)

Figure 2 Example of a combined Topic 5LNP&Q contents page

CHAPTER 15-1

TOPIC 5L STORAGE MAINTENANCE SCHEDULE

CONTENTS

Para

1 Introduction
3 Preliminary pages
3 Front cover
4 Amendment record
5 Record of Advance Information Leaflets (AIL) and Service Amendment Leaflets (SAL)
6 Contents
7 Introduction
8 List of systems and sub-systems
9 Zonal plan
10 Section 1 - storage maintenance list
10 Content
14 Compilation
15 Amendment

Figure Page

1 Layout of an aircraft Topic 5L storage maintenance schedule 5
2 Example of a stand-alone Topic 5L contents page 6
3 Example of a Sub-topic 5L contents page 7
4 Example of a stand-alone Topic 5L introduction contents page 8
5 Example 1 of a stand-alone Topic 5L introduction page 9
6 Example 2 of a stand-alone Topic 5L introduction page 10
7 Example 3 of a stand-alone Topic 5L introduction page 11
8 Example 4 of a stand-alone Topic 5L introduction page 12
9 Example 5 of a stand-alone Topic 5L introduction page 13
10 Example 6 of a stand-alone Topic 5L introduction page 14
11 Example 7 of a stand-alone Topic 5L introduction page 15
12 Example of a stand-alone Topic 5L section 1 page 1/2 (number of pages) 16
13 Example of a stand-alone Topic 5L section 1 storage maintenance list page 17

INTRODUCTION

1 The aircraft Topic 5L Storage Maintenance Schedule (SMS) is the master control document for Topics 5N, 5P and 5Q storage maintenance schedules. It is effectively a master maintenance list equivalent to that of the Topic 5A1 Section 1. It includes a list of all the preventive maintenance activities, by system, that are necessary for the preparation, maintenance and recovery of an aircraft during any of the categories of reserve that an aircraft is likely to be subjected to.

2 The SMS consists of a series of preliminary pages followed by a single section that forms the Storage Maintenance List. The layout of a Topic 5L is as shown in Figure 1.

PRELIMINARY PAGES

Front cover

3 The front cover forms the title page of a stand-alone Topic 5L as explained in Chapter 2. Examples of front covers are presented in Chapter 2-0, Figures 1 to 3.

Amendment record

4 The Amendment Record of a stand-alone Topic 5L is a common preliminary page as described in Chapter 2-0. Examples of A4 size Amendment Records are presented in Chapter 2-0, Figures 4 to 7.

Record of Advance Information Leaflets (AIL) and Service Amendment Leaflets (SAL)

5 The Record of AILs and SALs for a stand-alone Topic 5L is a common preliminary page as described in Chapter 2-0. Examples of A4 size Records of AILs and SALs are shown in Chapter 2-0, Figures 8 to 11.

Contents

6 The Contents page contains a list of headings that summarizes the make up of either a stand-alone Topic 5L or the Sub-topic 5L in a combined Topic 5LNP&Q. An example stand-alone Topic 5L Contents page is shown in Figure 2. An example Sub-topic 5L Contents page is shown in Figure 3.

Introduction

7 The introduction describes the storage maintenance system contained in the schedule. It also provides supplementary information regarding its implementation. Example Topic 5L Introduction pages are shown in Figures 4 to 11.

List of systems and sub-systems

8 An example of a list of systems and sub-systems is shown in Chapter 3-1, Figures 19 and 20.

Zonal plan

9 The Zonal Plan defines the various zones contained in an entire aircraft and allocates an appropriate identification number and description to each zone. The Zonal Plan is illustrated in the maintenance schedule preliminary pages only if a zonal plan is not provided in the Aircraft Topic 1. Example pages of a maintenance schedule Zonal Plan are shown in Chapter 3-1, Figures 21 and 22.

SECTION 1 - STORAGE MAINTENANCE LIST

Content

10 The content of the Storage Maintenance List (SML) is a transcription of the storage maintenance analysis record which contains the results of the storage logic analysis process as approved by the associated platform PT. Storage logic analysis is based on the principles of RCM methodology and the policy for aircraft storage stipulated in JAP 100V-21. The SML lists the maintenance activities to be done prior to, during and at the recovery of an aircraft from each category of storage reserve. These activities are described in the SML using the following elements of data:

10.1 The Storage Schedule Identification Number (SSIN).

10.2 The zone where the activity is to be done.

10.3 The item to be maintained.

10.4 The operation to be done.

10.5 The aircraft Mark applicability.

10.6 The trade responsible for the relevant 'on aircraft' operation.

10.7 The type of storage.

10.8 The occasions and intervals when tasks are to be done.

11 The SML is not to include safety precautions or to detail any level of supervision.

12 The first page of a Section 1 - SML details the number of pages contained therein, as shown in the example at Figure 12.

13 An example SML page is shown in Figure 13.

Compilation

14 A system and sub-system method is used in the compilation of the SML. The structure and systems of an aircraft are identified in the same manner as the Topic 1 Aircraft Maintenance Manual (AMM), whereby a specific chapter number is allocated to each system and a sub-chapter number to each sub-system. The following paragraphs provide guidance on the compilation of an SML:

14.1 Each maintenance item contained in the SML is allocated a Storage Schedule Identification Number (SSIN). The SSIN is used to identify the item wherever it appears in the storage topic series and is constructed as follows:

14.1.1 The first two digits identify the associated system.

14.1.2 The second two digits identify the associated sub-system.

14.1.3 The fifth digit is the letter 'R' to indicate that the item is contained in a storage (or category of reserve) schedule,

14.1.4 The last two digits represent the item number, which is allocated in numerical sequence by the Schedule Author.

14.1.5 An example of a SSIN is 2910R01, which is broken down as follows:

29 - Emergency Systems and Equipment.
10 - Ejection Seat.
R - Storage identification.
01 - Item number.

14.2 Systems and sub-systems are detailed in ascending numerical order.

14.3 The location of an item is identified by a zone number, as defined in the Zonal Plan promulgated in the schedule introductory pages or the aircraft Topic 1 AMM.

14.4 Items are numbered in a logical sequence; ie, in ascending zone order; control systems from input to output and structures in numerical order of frames or ribs.

14.5 The repetition of item numbers occasioned by identical assemblies, eg left and right mainplanes, No. 1, 2, 3 and 4 engines, etc, is to be avoided. Such items are identified by the use of multiple zones with a singular description, followed by the quantity in each zone. A separate SSIN is to be used if the maintenance frequencies of the items concerned are not identical.

14.6 If there is more than one item in the same zone, then the item is to be labelled with the quantity, eg Bolt (4 off). If one item passes through various zones, eg a control cable, then the item is to be labelled with the quantity, eg Cable (1 off). If there are one or more items in various zones, then the quantity in each zone is to be annotated eg (1 each zone) or (1 in zone 310, 2 in zone 320, 4 in zone 330).

14.7 Items requiring qualifications for modification state or other reason are to have the qualification in brackets following the description and given a separate SSIN.

14.8 Each system starts on a new page.

14.9 Operations are to be written as follows:

14.9.1 Exclude all operations merely to gain access; these are expanded on relevant work cards.

14.9.2 Operations are to be written using common and recognized terminology.

14.9.3 Item replacement operations phased into storage maintenance, known as in-phase operations, are to be indicated by the term 'Replace' followed by the reason in full eg 'Replace (Bay maintenance).' or 'Replace (Scrap life).'

14.9.4 When an item is removed for bay maintenance and the trade responsible for the bay maintenance is different from the trade responsible for its removal; then the trade responsible for bay maintenance is to be annotated in brackets following the operation eg:

'Oxygen mask. Replace (Bay maintenance) (SE). AF'.

14.9.5 Where the removal of an item is specified prior to an act of maintenance such as examination, testing, cleaning, etc, the removal is to be included in brackets as part of the operation eg 'Clean (Removed).'

14.9.6 Where an NDT examination is specified, technique details are to be included in brackets as part of the operation eg. 'Examine (Technique/NIM/EDD/66)'. If the schedules are written using Simplified Technical English in accordance with Specification ASD STE100, the operation is written as 'Do the NDT technique NIM/EDD/66.'

14.10 The aircraft Mark is identified only if the item has a specific aircraft Mark applicability. If maintenance operations are applicable to all Marks, then the column is left blank.

14.11 The Trade column shows the trade responsible for the maintenance.

14.12 When an item has more than one operation, the operations are inserted highest frequency first, followed by replacement operations.

14.13 The Type of Storage column ('STORE TYPE') indicates DS for dehumidified storage or HS for heated storage. If maintenance is applicable to both types of storage then the column is left blank.

14.14 The category of reserve, the preparation (PREP) and recovery (RECV) columns are used to indicate when a particular activity is to be done.

14.15 Operations that are to be done during storage are indicated by a letter in the relevant reserve category column to show the applicable maintenance group (Topic 5P).

Amendment

15 Amendments to the SML are to be compiled in accordance with Para 14 and the following guidelines:

15.1 Any proposal to add a new item or operation, to delete an existing item or operation, or to change the frequency of an operation, must be subjected to storage maintenance analysis and approved by the relevant platform PT before incorporation.

15.2 New items are inserted in the relevant system and sub-system, and in sequence, using the same logic as was used to compile the SML initially.

15.3 When all the maintenance operations for an item are deleted from the SML; the SSIN, Zone(s) and item description are to remain as written and the operation column is to be annotated with 'Deleted by Amdt ...' or 'Maintenance transferred to SSIN ..... by Amdt ...' as appropriate.

Front Cover (Title Page)
(See Chap 2-0)
(Stand-alone Topic 5L only)

Amendment Record
(See Chap 2-0)
(Stand-alone Topic 5L only)

Record of Advance Information Leaflets (AIL)
(See Chap 2-0)
(Stand-alone Topic 5L only)

Contents

Introduction

List of Systems and Sub-systems
(See Chap 3-1)

Zonal Plan (if required)
(See Chap 3-1)

Section 1
Storage Maintenance List

Figure 1 Layout of an aircraft Topic 5L storage maintenance schedule

STORAGE MAINTENANCE SCHEDULE
AIRCRAFT NAME

AP Code-5L

CONTENTS

Preliminary Material — Page

Title page ..... (i)/(ii)
Amendment record) ..... (iii)/(iv)
Record of Advance Information Leaflets (AIL) and Service Amendment Leaflets (SAL) ..... (v)/(vi)
Contents (This page) ..... (vii)/(viii)
Introduction contents ..... (ix)/(x)
Introduction ..... (xi) to (xvi)
List of systems and sub-systems ..... (xvii) and (xviii)
Zonal plan (If required) ..... (xix)/(xx) to (xxiii)

Sections

1 Storage Maintenance List

E01234 ( )

Page (vii)/(viii)

Figure 2 Example of a stand-alone Topic 5L contents page

STORAGE MAINTENANCE SCHEDULE
AIRCRAFT NAME

AP Code-5LNP&Q
Sub-Topic 5L

CONTENTS

Preliminary Material — Page

Contents (This page) ..... (i)/(ii)
Introduction contents ..... (iii)
Introduction ..... (iv) to (xvi)
List of systems and sub-systems ..... (xvii) and (xviii)
Zonal plan (If required) ..... (xix)/(xx) to (xxiii)

Sections

1 Storage Maintenance List

E01234 ( )

Page (i)/(ii)

Figure 3 Example of a Sub-topic 5L contents page

STORAGE MAINTENANCE SCHEDULE AP Code-5L
AIRCRAFT NAME

INTRODUCTION

CONTENTS

Para	
	Introduction
1	Maintenance System
	Periodicity
	Associated Topic Description
4	Topic 5L- Storage Maintenance Schedule
5	Topic 5A2 - Hazard and Maintenance Information
6	Topic 5N - Preparation for Storage Schedule
9	Topic 5P - Maintenance During Storage Schedule
13	Topic 5Q - Recovery from Storage Schedule
	General
17	Storage Maintenance Practices
24	Storage Schedule Identification Number (SSIN)
26	Items requiring record/log cards
27	Trade abbreviations
29	General abbreviations
30	Aircraft Zoning
	Amendment
32	Schedule amendments

E01234 ( ) Page (ix)

Figure 4 Example of a stand-alone Topic 5L introduction contents page

AP Code-5L

INTRODUCTION

Maintenance System

1 This Storage Maintenance Schedule (SMS) has been produced in accordance with ▶MAP-01◀ and JAP 100V-21, and details the minimum maintenance requirements for the XXXXXX aircraft held in reserve. It is designed for use within the UK Military Air Environment.

2 The schedule is displayed in a periodic format.

PERIODICITY

3 The schedule is designed for a calendar based cycle dependant on the category of reserve and type of storage that the aircraft is held in, which is as follows:

Category of Reserve	Type of Storage	Frequency	Topic
All	HS and DS	Preparation	5N
Reception	HS	7 Days 14 Days 28 Days 3 Months	5P
Immediate Readiness Reserve (IRR)	HS and DS	7 Days 28 Days 3 Months 6 Months	5P
Short Term Reserve (STR)	HS	3 Months 6 Months	5P
	DS	6 Months	5P

Category of Reserve	Type of Storage	Frequency	Topic
Medium Term Reserve (MTR)	HS	3 Months 6 Months 1 Year	5P
	DS	6 Months 1 Year	5P
Long Term Reserve (LTR)	HS	3 Months 6 Months 1 Year 2 Years	5P
	DS	6 Months 2 Years	5P
All	HS and DS	Recovery	5Q

HS - Heated Storage
DS - Dehumidified Storage

E01234 ( )

Page (x)

Figure 5 Example 1 of a stand-alone Topic 5L introduction page

STORAGE MAINTENANCE SCHEDULE AP Code-5L
AIRCRAFT NAME

INTRODUCTION

ASSOCIATED TOPIC DESCRIPTION

Topic 5L Storage Maintenance Schedule (SMS)

4 The Topic 5L consists of a single section as follows:

4.1 Section 1 - Storage Maintenance List (SML)

4.1.1 The SML is a list of maintenance operations to be done during preparation, maintenance during and recovery from reserve.

4.1.2 The SML reflects maintenance requirements by aircraft system and sub-system.

4.1.3 Each sub-system is divided into items under headings which indicate location, maintenance operation and trade.

4.1.4 Where maintenance operations are applicable to all marks of aircraft, the mark applicability column is left blank. If maintenance is applicable to a particular mark, then only that mark is annotated in the applicability column.

4.1.5 Where maintenance operations are applicable to both types of storage the column is left blank. Operations applicable to aircraft in Dehumidified Storage are indicated by DS, and to aircraft in Heated Storage by HS in the Type of Storage 'STORE TYPE' column.

4.1.6 Applicability of operations during preparation and recovery phases is indicated by 'X' in the 'PREP' or 'RECV' column as appropriate; additionally an 'X' in the 'RECN', 'IRR', 'STR', 'MTR' and 'LTR' columns details the category of reserve to which the operation applies.

4.1.7 Operations which are to be done during storage are indicated by letters in the 'RECN', 'IRR', 'STR', 'MTR' and 'LTR' columns as appropriate. These letters represent groups of maintenance as described at para 9.

4.1.8 Certain operations are done by a trade other than the trade responsible for the item. The 'Trade' column shows the trade responsible for the item operation.

4.1.9 The SML does not include items concerned with preparation for or recovery from maintenance operations; ie, removal of panels, jacking of aircraft, and removal of components for access purposes. This information is contained on the work cards.

E01234 ( ) Page (xi)

Figure 6 Example 2 of a stand-alone Topic 5L introduction page

AP Code-5L

Topic 5A2 - Hazard and Maintenance Information (H&MI)

5 H&MI is used to provide ground trade personnel with readily available reference to the relevant health and safety requirements, warnings, cautions and maintenance notes. Compliance with this information is mandatory during all aircraft maintenance activities and it is to be readily available to maintenance personnel at all times.

TOPIC 5N - PREPARATION FOR STORAGE SCHEDULE

6 The Topic 5N contains work cards which detail the minimum requirements to place a XXXXX aircraft into storage. SML items are amplified and displayed on work cards for use by maintenance personnel and contained in the Topic 5N under the following sections:

Section 1 - Reception.

Section 2 - Immediate Readiness Reserve (IRR).

Section 3 - Short Term Reserve (STR).

Section 4 - Long Term Reserve (LTR).

7 Aircraft allocated to MTR should be prepared as for aircraft allocated to STR, HS or DS as appropriate.

8 Each section of the Topic 5N is produced in basic format, that is the Reception preparation contains only Reception items and the Immediate Readiness Reserve only those items additional to the Reception and so on.

Topic 5P - Maintenance during Storage Schedule

9 The Topic 5P contains work cards which detail maintenance to be done during storage. SML items are amplified and displayed on work cards for use by maintenance personnel and contained in the Topic 5P in 7 separate sections. Each section containing work cards for one storage maintenance group.

10 Each section of the Topic 5P is produced in basic format, that is each Group will contain only those items which are additional to those in the previous Group(s). Therefore all cards of a higher frequency are to be satisfied in addition to those relating to the maintenance due.

11 Group G has been allocated for items Out-of-Phase. Each work card will be annotated with its applicable frequency.

12 The maintenance groups and their applicability are detailed in Table 1.

E01234 ( ) Page (xii)

Figure 7 Example 3 of a stand-alone Topic 5L introduction page

STORAGE MAINTENANCE SCHEDULE
AIRCRAFT NAME

AP Code-5L

INTRODUCTION

TABLE 1 STORAGE MAINTENANCE APPLICABILITY

		Storage Maintenance Group						
Category of Reserve	Frequency	A	B	C	D	E	F	G
Reception	7 Days	*						
	14 Days							
	28 Days							
	3 Months		*					
	Out-of-Phase							*
IRR (HS and DS)	7 Days	*						
	14 Days							
	28 Days							
	3 Months			*				
	6 Months				*			
	Out-of-Phase							*
STR (HS)	3 Months	*						
	6 Months					*		
	Out-of-Phase							*
STR (DS)	6 Months	*						
	Out-of-Phase							*
MTR (HS)	3 Months	*						
	6 Months					*		
	1 Year						*	
	Out-of-Phase							*
MTR (DS)	6 Months	*						
	1 Year					*	*	
	Out-of-Phase							*
LTR (HS)	3 Months	*						
	6 Months					*		
	1 Year						*	
	Out-of-Phase							*
LTR (DS)	6 Months	*						
	2 Years					*	*	
	Out-of-Phase							*

E01234 ( )

Page (xiii)

Figure 8 Example 4 of a stand-alone Topic 5L introduction page

AP Code-5L

Topic 5Q - Recovery from Storage Schedule

13 The Topic 5Q contains work cards which detail the requirements to recover a XXXXXX aircraft from storage. SML items are amplified and displayed on work cards for use by maintenance personnel and contained in the Topic 5Q under the following sections:

Section 1 - Reception.

Section 2 - Immediate Readiness Reserve (IRR).

Section 3 - Short Term Reserve (STR).

Section 4 - Long Term Reserve (LTR).

14 Aircraft undergoing Recovery from MTR should be recovered as for aircraft undergoing Recovery from STR, HS or DS as appropriate.

15 Each Section of the Topic 5Q is produced in basic format, that is the Reception Recovery contains only Reception items and the Immediate Readiness Reserve only those items additional to the Reception and so on.

16 Aircraft being recovered from all categories of reserve excluding reception are to be prepared in accordance with the current Standard of Issue (▶MAP-01 Chapter 9.4◀). This is in addition to the work detailed in the Topic 5Q.

GENERAL

Storage Maintenance Practices

17 Documentation requirements for aircraft in reserve are detailed in JAP 100V-21.

18 Storage maintenance practices and procedures as detailed in JAP 100V-21 are to be complied with throughout this schedule.

19 Aircraft are to be recovered to the same storage schedule editions and amendment state as applied when the aircraft was put into storage.

20 The importance of a thorough examination for corrosion during initial preparation is stressed. During preparation, in addition to the detailed requirements of the storage schedule, all tradesmen are to do a thorough examination for corrosion and for damage to the original protective treatment, which may allow corrosion to develop.

21 Aircraft are required to be flight tested every 3 months (IRR) and annually (STR) as detailed in JAP 100V-21 Chapter 5. The requirement for flight test is not stated in the SML but is to be controlled under local management procedures.

22 Additional scheduled maintenance, including component replacements, required before flight testing are detailed in JAP 100V-21 Chapter 5.

23 During storage maintenance and at each recovery, outstanding Special Instructions (Technical) and the appropriate class of modifications are to be embodied (JAP 100V-21). This requirement is not stated in the SML but is to be controlled under local management procedures.

E01234 ( ) Page (xiv)

Figure 9 Example 5 of a stand-alone Topic 5L introduction page

STORAGE MAINTENANCE SCHEDULE AP Code-5L
AIRCRAFT NAME

INTRODUCTION

Storage Schedule Identification Number (SSIN)

24 Each item in the SML is allocated an alpha/numeric SSIN which identifies the item wherever it appears in the storage maintenance schedule. The SSIN gives direct reference to the chapter and sub-chapter of the Aircraft Maintenance Manual (AMM) in which information may be found.

Example: SSIN 2910R01

29 - System 29 - Emergency Systems and Equipment (AMM Chapter 29 - Emergency Systems and Equipment)

10 - Sub-System 10 - Ejection Seat (AMM Sub-chapter 10 - Ejection Seat)

The letter 'R' denotes that it is a storage schedule identification number. The remaining digits 01 identify the item within the sub-system in the schedule. Assistance items on work cards are annotated with the SSIN of the aircraft system and sub-system applicable to the item and the last two digits designated '00'.

25 SSINs are not subject to MDS reporting, work type code 01 is to be used on all storage maintenance documentation.

Items requiring Record/log Cards

26 All items that require record/log cards are listed in the introduction of the aircraft Topic 5A1.

Trade Abbreviations

27 The following trade abbreviations are used in this schedule:

Mech(AF)	-	Mechanical (Airframe)
Wpns	-	Weapons
Av(Elect)	-	Avionic (Electrical)
Mech(Prop)	-	Mechanical (Propulsion)
AV(Av)	-	Avionic (Avionics)
Ptr/Fnr	-	Painter and Finisher

AUTHORS NOTE: Trade abbreviations should reflect specific Service applicability (See Chapter 1-4 Para 6).

28 Where single-skilled ground trade personnel are employed, the bracketed abbreviations, eg (AF), represent single-skilled trades.

E01234 ( ) Page (xv)

Figure 10 Example 6 of a stand-alone Topic 5L introduction page

General Abbreviations

29 The following general abbreviations are used in this schedule:

DS	Dehumidified Storage	PREP	Preparation
HS	Heated Storage	RECN	Reception
IRR	Immediate Readiness Reserve	RECV	Recovery
LTR	Long Term Reserve	STORE TYPE	Type of storage
MTR	Medium Term Reserve	STR	Short Term Reserve

Aircraft Zoning

30 The aircraft is divided into zones to facilitate maintenance planning and the identification of work areas.

31 Zonal work cards are in Chapter 9 of the relevant sections of the storage maintenance schedule and are to be done by authorized ground trade personnel only.

Schedule Amendments

32 New or amended material is shown by a vertical line in the left hand margin. Amendment procedure is shown in ▶MAP-01 Chapter 8◀.

Figure 11 Example 7 of a stand-alone Topic 5L introduction page

STORAGE MAINTENANCE SCHEDULE
AIRCRAFT NAME

AP Code-5L
Section 1

	Page No.	No. of Pages
Storage Maintenance List	1 - 151	151

E01234 ( )

Page 1/2

Figure 12 Example of a stand-alone Topic 5L section 1 page 1/2 (number of pages)

STORAGE MAINTENANCE LIST
AIRCRAFT NAME

AP Code-5L
Section 1

Sub-system GENERAL - 00

System AIRCRAFT - 01

SSIN	ZONE	ITEM	OPERATION	MK	TRADE	STORE TYPE	PREP	RECN	IRR	STR	MTR	LTR	RECV
0100R01	000	Aircraft	Make sure that the covers, plugs, blanks and ground locks are fitted.		Mech(AF)		X	X			X		
			Wash.		Mech(AF)		X				X		
			Make sure that the covers, plugs, blanks and ground locks are secure.		Mech(AF)								
			Remove covers, plugs, blanks and ground locks.		Mech(AF)			A			E		
			Install covers, plugs, blanks and ground locks again.		Mech(AF)			A			E		
			Make sure that it is clean.		Mech(AF)						X		X
0100R02	200 300 410 420	Drainage hole (6 in zone 200, 14 in zone300, 26 each zone 410 and 420).	Make sure that they are clear.		Mech(AF)		X	X			X		

AUTHORS NOTE: Trade abbreviations should reflect specific Service applicability (See Chapter 1-4 Para 6).

E01234 ( )

Page 3

Figure 13 Example of a stand-alone Topic 5L section 1 storage maintenance list page

CHAPTER 15-2

TOPIC 5N PREPARATION FOR STORAGE

CONTENTS

Para

1 Introduction
5 Preliminary pages
5 Front cover
6 Amendment record
7 Record of Advance Information Leaflets (AIL) and Service Amendment Leaflets (SAL)
8 Contents
9 Introduction
10 Health and safety at work
11 Zonal plan
12 List of card numbers allocated
13 Supplementary maintenance
14 Section chapters
15 Layout of work cards

Figure Page

1 Layout of an aircraft Topic 5N preparation for storage schedule 3
2 Example of a stand-alone Topic 5N contents page 4
3 Example of a Sub-topic 5N contents page 5
4 Example of a stand-alone Topic 5N introduction page 6
5 Example of a stand-alone Topic 5N list of card numbers allocated page 7
6 Example of a stand-alone Topic 5N work card 8

INTRODUCTION

1 The Topic 5N contains work cards that detail the maintenance activities necessary to prepare aircraft for storage. It consists of a series of preliminary pages followed by four sections. Each section represents a specific category of reserve as follows:

1.1 Section 1 - Reception (RECN).

1.2 Section 2 - Immediate Readiness Reserve (IRR).

1.3 Section 3 - Short Term Reserve (STR).

1.4 Section 4 - Long Term Reserve (LTR).

2 Aircraft allotted to Medium Term Reserve (MTR) are prepared in the same way as those allotted to STR.

3 Each section contains a series of chapters that represent each of the aircraft trades involved with the preparation activities and each chapter contains the appropriate work cards. The approved format for work cards is the MOD Form 707MS.

4 The layout of a Topic 5N is as shown in Figure 1.

PRELIMINARY PAGES

Front cover

5 The front cover forms the title page of a Topic 5N as described in Chapter 2-0. Examples of front covers are presented in Chapter 2-0, Figures 1 to 3.

Amendment record

6 The Amendment Record is a common preliminary page as described in Chapter 2-0. Examples of A4 size Amendment Records are presented in Chapter 2-0, Figures 4 to 7.

Record of Advance Information Leaflets (AIL) and Service Amendment Leaflets (SAL)

7 The Record of AILs and SALs is a common preliminary page as described in Chapter 2-0. Examples of A4 size Records of AILs and SALs are shown in Chapter 2-0, Figures 8 to 11.

Contents

8 The Contents page contains a list of headings that summarizes the make up of either a stand-alone Topic 5N or the Sub-topic 5N in a combined Topic 5LNP&Q. An example stand-alone Topic 5N Contents page is shown in Figure 2. An example Sub-topic 5N Contents page is shown in Figure 3.

Introduction

9 The introduction describes the type of preparation for storage work cards contained in the schedule. It also provides supplementary information regarding their general use and completion. An example of a Topic 5N Introduction page is shown in Figure 4.

Health and safety at work

10 The Health and Safety at Work page is presented in the same way as the example shown in Chapter 11-0, Figure 2.

Zonal plan

11 The Zonal Plan defines the various zones contained in an entire aircraft and allocates an appropriate identification number and description to each zone. The Zonal Plan is illustrated in the maintenance schedule preliminary pages only if a zonal plan is not provided in the Aircraft Topic 1. The Zonal Plan pages are presented in the same way as the examples shown in Chapter 11-0, Figure 3 and 4.

List of card numbers allocated

12 The List of Card Numbers Allocated illustrates, in tabular form, the numbers of the work card series that have been allocated for use in each section. The list does not represent the actual numbers of the work cards contained in a schedule. An example of a Topic 5N List of Card Numbers Allocated Pages is shown in Figure 5.

Supplementary maintenance

13 Supplementary Maintenance pages are included to facilitate the listing of other maintenance tasks, such as Technical Instructions, that are to be done at the same time as the preparation for storage. The Supplementary Maintenance page is presented in the same way as the example shown in Chapter 11-0, Figure 9.

SECTION CHAPTERS

14 The work cards in each section are grouped by trade into chapters and a representative example of a List of Chapters page is shown in Chapter 11-0, Figure 10.

LAYOUT OF WORK CARDS

15 The layout of work cards is as described in Chapter 11-0. An example of a Topic 5N work card is shown in Figure 6.

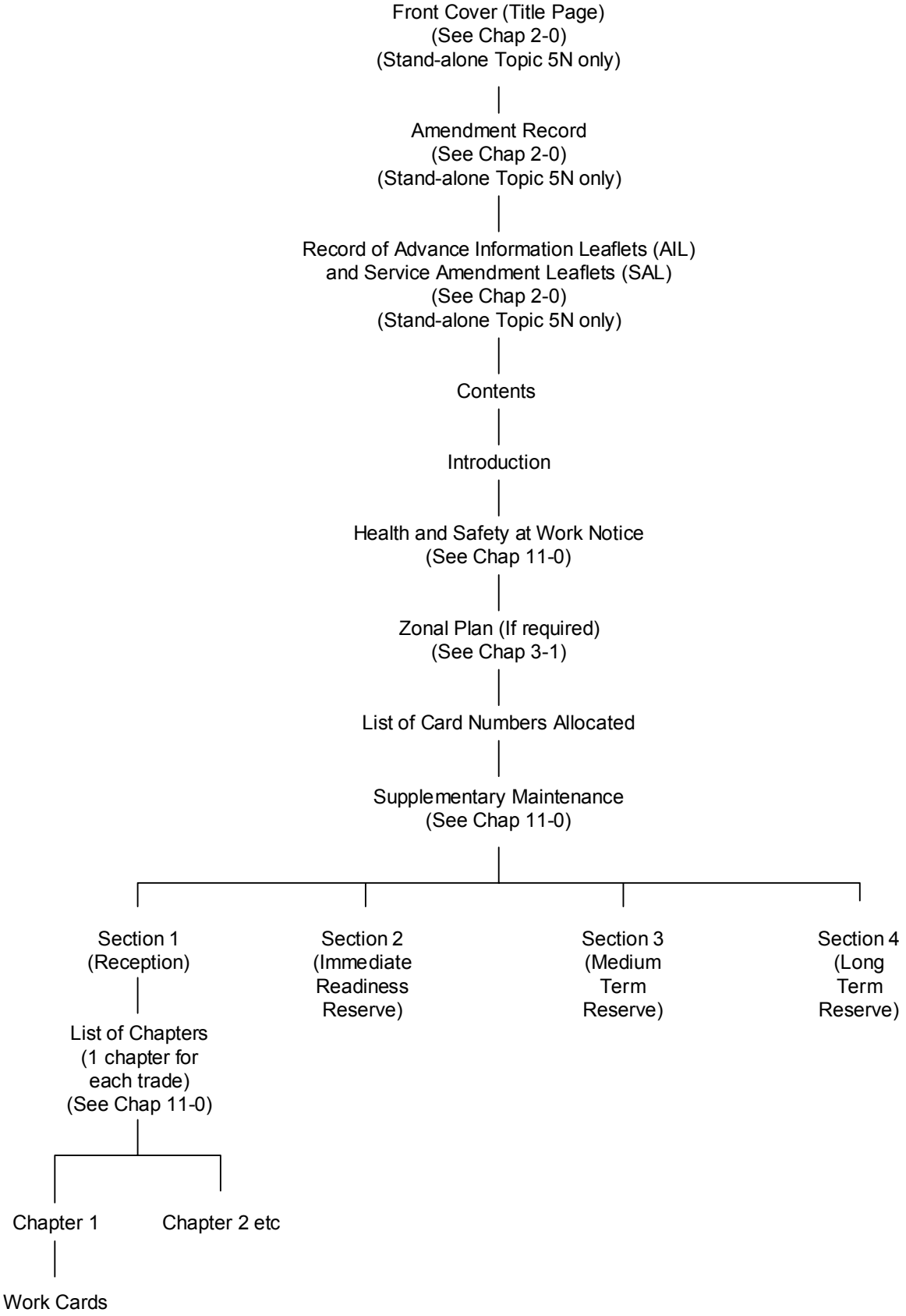

Figure 1 Layout of an aircraft Topic 5N preparation for storage schedule

PREPARATION FOR STORAGE
AIRCRAFT NAME

AP Code-5N

CONTENTS

Preliminary Material — Page

Title page ..... (i)/(ii)
Amendment record ..... (iii) and(iv)
Record of Advance Information Leaflets (AIL) and Service Amendment Leaflets (SAL) ..... (v) and (vi)
Contents (This page) ..... (vii)/(viii)
Introduction ..... (ix)/(x)
Health and safety at work ..... (xi)/(xii)
Zonal plan (If required) ..... (xiii) to (xvi)
List of card numbers allocated ..... (xvii)/ (xviii)
List of sections ..... (xix)/(xx)
Supplementary maintenance ..... (xxi)/(xxii)

Sections

1 Reception
2 Immediate Readiness Reserve
3 Short Term Reserve
4 Long Term Reserve (Not Issued)

E01234 ( )

(vii)/(viii)

Figure 2 Example of a stand-alone Topic 5N contents page

PREPARATION FOR STORAGE
AIRCRAFT NAME

AP Code-5LNP&Q
Sub-Topic 5N

CONTENTS

Preliminary Material — Page

Contents (This page) ..... (i)/(ii)
Introduction ..... (iii)/(iv)
Health and safety at work ..... (v)/(vi)
Zonal plan (If required) ..... (vii) to (x)
List of card numbers allocated ..... (xi)/(xii)
List of sections ..... (xiii)/(xiv)
Supplementary maintenance ..... (xv)/(xvi)

Sections

1 Reception
2 Immediate Readiness Reserve
3 Short Term Reserve
4 Long Term Reserve (Not Issued)

E01234 ( ) (i)/(ii)

Figure 3 Example of a Sub-topic 5N contents page

PREPARATION FOR STORAGE
AIRCRAFT NAME

AP Code-5N

INTRODUCTION

1 This Topic 5N contains a series of work cards, detailing the minimum requirements to place a (Aircraft name) into storage.

2 This Topic 5N is to be used in conjunction with the AMM, the Topic 5L and the Topic 5A2, which contain information on the following:

AMM - Aircraft Maintenance Manual.

5L - Storage Maintenance Schedule.

5A2 - Hazard and Maintenance Information.

3 When this Topic 5N is in use, all work cards of a lower Category of Reserve are to be satisfied in addition to the higher Category of Reserve work cards (e.g. Preparation for Short Term Reserve = Short Term + Reception + Immediate Readiness).

4 Each item in the Storage Maintenance List (SML) is allocated a SSIN, which identifies the item wherever it appears in the schedule. Assistance, preparation and recovery items for tasks detailed on work cards are annotated with the SSIN of the aircraft system and sub-system applicable to the item and the last two digits designated '00'.

5 SML items are amplified and displayed on work cards for use by maintenance personnel and contained in this Topic under the following sections.

Section 1 - Reception (RCN).

Section 2 - Immediate Readiness Reserve (IRR).

Section 3 - Short Term Reserve (STR).

Section 4 - Long Term Reserve (LTR) (Not issued).

6 Aircraft allotted to MTR are prepared in the same way as those allotted to STR.

7 A sheet headed 'List of Card Numbers Allocated' is shown following the Health and Safety at Work notice. Unused card numbers are provided to allow for any future amendment action.

8 New or amended matter will be indicated by a vertical line in the left hand margin to show the extent of the amendment. Amendment procedure is detailed in ▶MAP-01 Chapter 8.2◀.

E01234 ( ) (ix)/(x)

Figure 4 Example of a stand-alone Topic 5N introduction page

PREPARATION FOR STORAGE
AIRCRAFT NAME

AP Code-5N

LIST OF CARD NUMBERS ALLOCATED

SECTION	STORAGE PREPARATION			
SECTION 1	RECEPTION			
SECTION 2	IMMEDIATE READINESS RESERVE			
SECTION 3	SHORT TERM RESERVE			
SECTION 4	LONG TERM RESERVE			

TRADE	WORK CARD NUMBERS			
Mech(AF)	1 - 30	101 - 120	201 - 220	301 - 320
Wpns	31 - 40	121 - 130	221 - 240	321 - 330
Av(Elect)	41 - 50	131 - 140	241 - 250	331 - 340
Mech(Prop)	51 - 64	141 - 150	251 - 260	341 - 350
Av(AV)	65 - 80	151 - 160	261 - 270	351 - 360
SE	81 - 84	161 - 170	271 - 274	361 - 370
NDT	85 - 90	171 - 180	275 - 280	371 - 380
Ptr/Fnr	91 - 94	181 - 190	281 - 290	381 - 390
Zonal	95 - 100	191 - 200	291 - 300	391 - 400

E01234 ( )

(xvii)/(xviii)

Figure 5 Example of a stand-alone Topic 5N list of card numbers allocated page

MECHANICAL(AIRFRAME) Card 1	PREPARATION FOR STORAGE RECEPTION AIRCRAFT NAME	AP Code-5N Sect 1 Chap 1	Maintenance Record Aircraft or Equipment Serial No:	MOD Form 707MS (Revised Jan 01) Date:

INFORMATION IN THE TOPIC 5A2 IS TO BE CONSULTATED THROUGHOUT THE WORK DETAILED ON THIS CARD				Tradesman		Brief details of suspected fault(s) and SNOW(s)	Supervisor	
Associated cards		Power	Code	Man Hrs	Certification and TDM		Man Hrs	Certification and TDM
		N/A						
BLOCK 1	AIRCRAFT - GENERAL ACCESS AND DOORS							
	Zone 120							
0100R00	Engine compartment, left and right side panel.	Remove.						
	Zone 300							
0100R00	Rear fuselage, left and right elevator controls access panel.	Remove.						
	Zones 412 and 422							
0100R00	Wing flap bay, left and right aileron control lever access panel (1 each zone).	Open.						
E01234 ( )								

Figure 6 Example of a stand-alone Topic 5N work card

CHAPTER 15-3

TOPIC 5P MAINTENANCE DURING STORAGE

CONTENTS

Para

1 Introduction
3 Preliminary pages
3 Front cover
4 Amendment record
5 Record of Advance Information Leaflets (AIL) and Service Amendment Leaflets (SAL)
6 Contents
7 Introduction
8 Health and safety at work
9 Zonal plan
10 List of card numbers allocated
11 Supplementary maintenance
12 Section chapters
13 Layout of work cards

Figure Page

1 Layout of an aircraft Topic 5P maintenance during storage schedule 3
2 Example of a stand-alone Topic 5P contents page 4
3 Example of a stand-alone Topic 5P introduction page 5
4 Example of a stand-alone Topic 5P list of card numbers allocated page 6
5 Example of a stand-alone Topic 5P work card 7

INTRODUCTION

1 The Topic 5P contains work cards that detail the maintenance activities necessary during periods when an aircraft is allotted to a category of reserve for storage. It consists of a series of preliminary pages followed by seven sections. Each section represents a specific group of work cards. The maintenance groups and their applicability are described in the introduction of the Topic 5L as shown at Chap 15-1, Figure 7 and Figure 8.

2 The layout of a Topic 5P is as shown in Figure 1.

PRELIMINARY PAGES

Front cover

3 The front cover forms the title page of a Topic 5P as described in Chapter 2-0. Examples of front covers are presented in Chapter 2-0, Figures 1 to 3.

Amendment record

4 The Amendment Record is a common preliminary page as described in Chapter 2-0. Examples of A4 size Amendment Records are presented in Chapter 2-0, Figures 4 to 7.

Record of Advance Information Leaflets (AIL) and Service Amendment Leaflets (SAL)

5 The Record of AILs and SALs is a common preliminary page as described in Chapter 2-0. Examples of A4 size Records of AILs and SALs are shown in Chapter 2-0, Figures 8 to 11.

Contents

6 The Contents page contains a list of headings that summarizes the make up of either a stand-alone Topic 5P or the Sub-topic 5P in a combined Topic 5LNP&Q. An example Contents page is shown in Figure 2.

Introduction

7 The introduction describes the type of maintenance work cards contained in the schedule. It also provides supplementary information regarding their general use and completion. An example of a Topic 5P Introduction page is shown in Figure 3.

Health and safety at work

8 The Health and Safety at Work page is presented in the same way as the example shown in Chapter 11-0, Figure 2.

Zonal plan

9 The Zonal Plan defines the various zones contained in an entire aircraft and allocates an appropriate identification number and description to each zone. The Zonal Plan is illustrated in the maintenance schedule preliminary pages only if a zonal plan is not provided in the Aircraft Topic 1. The Zonal Plan pages are presented in the same way as the examples shown in Chapter 3-1, Figure 21 and 22.

List of card numbers allocated

10 The List of Card Numbers Allocated illustrates, in tabular form, the numbers of the work card series that have been allocated for use in each section. The list does not represent the actual numbers of the work cards contained in a schedule. An example of a Topic 5P List of Card Numbers Allocated Page is shown in Figures 4.

Supplementary maintenance

11 Supplementary Maintenance pages are included to facilitate the listing of other maintenance tasks, such as Technical Instructions, that are to be done at the same time as the preparation for storage. The Supplementary Maintenance page is presented in the same way as the example shown in Chapter 11-0, Figure 10.

SECTION CHAPTERS

12 The work cards in each section are grouped by trade into chapters and a representative example of a List of Chapters page is shown in Chapter 11-0, Figure 11.

LAYOUT OF WORK CARDS

13 The layout of work cards is as described in Chapter 11-0. An example of a Topic 5P work card is shown in Figure 5.

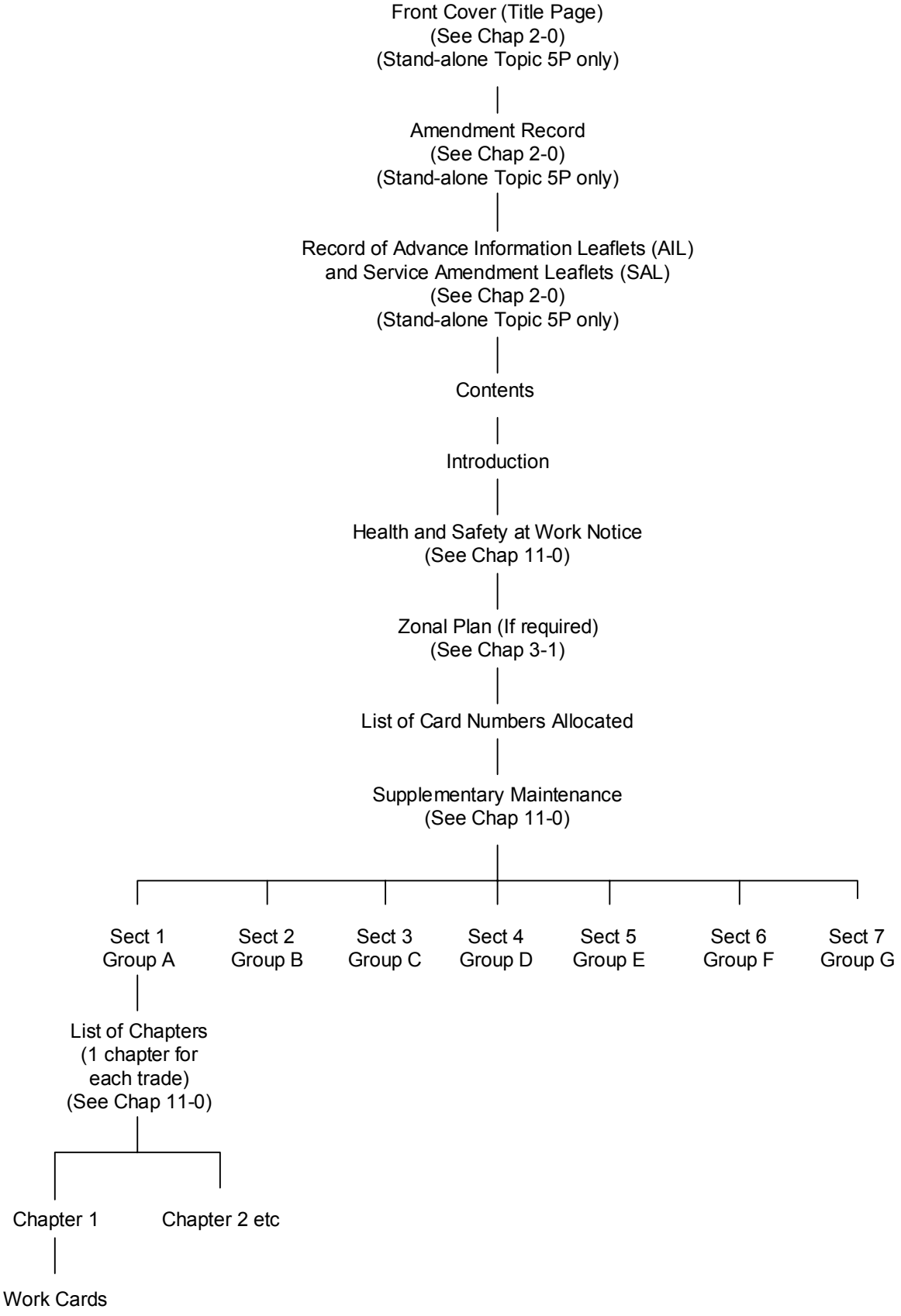

Figure 1 Layout of an aircraft Topic 5P maintenance during storage schedule

MAINTENANCE DURING STORAGE
AIRCRAFT NAME

AP Code-5P

CONTENTS

Preliminary Material

	Page
Title page	(i)/(ii)
Amendment record	(iii) and(iv)
Record of Advance Information Leaflets (AIL) and Service Amendment Leaflets (SAL)	(v) and (vi)
Contents (This page)	(vii)/(viii)
Introduction	(ix)/(x)
Health and safety at work	(xi)/(xii)
Zonal plan (If required)	(xiii) to (xvi)
List of card numbers allocated	(xvii)/ (xviii)
Supplementary maintenance	(xix)/(xx)

Sections

1 Group A
2 Group B (Not issued)
3 Group C
4 Group D (Not issued)
5 Group E
6 Group F
7 Group G (Not issued)

E01234 ( )

(vii)/(viii)

Figure 2 Example of a stand-alone Topic 5P contents page

MAINTENANCE DURING STORAGE
AIRCRAFT NAME

AP Code-5P

INTRODUCTION

1 This Topic 5P contains a series of work cards, detailing the minimum requirements to maintain a (Aircraft name) whilst it is in storage.

2 This Topic 5P is to be used in conjunction with the AMM, the Topic 5L and the Topic 5A2, which contain information on the following:

AMM - Aircraft Maintenance Manual.

5L - Storage Maintenance Schedule.

5A2 - Hazard and Maintenance Information.

3 Each item in the Storage Maintenance List (SML) is allocated a SSIN, which identifies the item wherever it appears in the schedule. Assistance, preparation and recovery items for tasks detailed on work cards are annotated with the SSIN of the aircraft system and sub-system applicable to the item and the last two digits designated '00'.

4 This Topic 5P contains work cards which detail maintenance to be done during storage. SML items are amplified and displayed on work cards for use by maintenance personnel and contained in the Topic 5P in 7 separate sections.

5 Each section of the Topic 5P is produced in basic format; ie, each Group will contain only those items which are additional to those in the previous Group(s). Therefore, all cards of a higher frequency are to be satisfied in addition to those relating to the maintenance due.

6 Group G has been allocated for items Out-Of-Phase. Each work card will be annotated with its applicable frequency.

7 The maintenance groups and their applicability are detailed in the introduction to the Topic 5L.

8 A sheet headed 'List of Card Numbers Allocated' is shown following the Health and Safety at Work notice. Unused card numbers are provided to allow for any future amendment action.

9 New or amended matter will be indicated by a vertical line in the left hand margin to show the extent of the amendment. Amendment procedure is detailed in ▶MAP-01 Chapter 8.2◀.

E01234 ( ) (ix)/(x)

Figure 3 Example of a stand-alone Topic 5P introduction page

MAINTENANCE DURING STORAGE
AIRCRAFT NAME

AP Code-5P

LIST OF CARD NUMBERS ALLOCATED

STORAGE MAINTENANCE							
GROUP	A	B	C	D	E	F	G

TRADE	WORK CARD NUMBERS						
Mech(AF)	1 - 20	101 - 120	201 - 220	301 - 320	401 - 420	501 - 530	601 - 620
Wpns	21 - 30	121 - 130	221 - 230	321 - 330	421 - 430	531 - 534	621 - 630
Av(Elect)	31 - 40	131 - 140	231 - 240	331 - 340	431 - 440	535 - 540	631 - 640
Mech(Prop)	41 - 50	141 - 150	241 - 260	341 - 350	441 - 450	541 - 570	641 - 650
Av(AV)	51 - 60	151 - 160	261 - 264	351 - 360	451 - 460	571 - 574	651 - 660
SE	61 - 70	161 - 170	265 - 270	361 - 370	461 - 470	575 - 580	661 - 670
NDT	71 - 80	171 - 180	271 - 280	371 - 380	471 - 480	581 - 584	671 - 680
Ptr/Fnr	81 - 90	181 - 190	281 - 290	381 - 390	481 - 490	585 - 590	681 - 690
Zonal	91 - 100	191 - 200	291 - 300	391 - 400	491 - 500	591 - 600	691 - 700

E01234 ( )

(xvii)/(xviii)

Figure 4 Example of a stand-alone Topic 5P list of card numbers allocated page

MECHANICAL(AIRFRAME) Card 1	MAINTENANCE DURING STORAGE GROUP A AIRCRAFT NAME	AP Code-5P Sect 1 Chap 1	Maintenance Record Aircraft or Equipment Serial No:				MOD Form 707MS (Revised Jan 01) Date:	
INFORMATION IN THE TOPIC 5A2 IS TO BE CONSULTATED THROUGHOUT THE WORK DETAILED ON THIS CARD			Tradesman		Brief details of suspected fault(s) and SNOW(s)	Supervisor		
Associated cards	Power	Code	Man Hrs	Certification and TDM		Man Hrs	Certification and TDM	
	N/A							
BLOCK 1 AIRCRAFT - GENERAL This block is applicable only to RECN. Zone 000 0100R00 Aircraft. Remove.covers, plugs, blanks and ground locks.								
BLOCK 2 AIRCRAFT - GENERAL This block is applicable only to RECN. Zone 000 0100R00 Aircraft. Install.covers, plugs, blanks and ground locks again.								
BLOCK 3 AIRCRAFT - GENERAL This block is applicable only to RECN. Zone 000 0100R00 Aircraft. Make sure that.covers, plugs, blanks and ground locks are secure.								
E01234 ( )								

Figure 5 Example of a stand-alone Topic 5P work card

CHAPTER 15-4

TOPIC 5Q RECOVERY FROM STORAGE

CONTENTS

Para

1 Introduction
5 Preliminary pages
5 Front cover
6 Amendment record
7 Record of Advance Information Leaflets (AIL) and Service Amendment Leaflets (SAL)
8 Contents
9 Introduction
10 Health and safety at work
11 Zonal plan
12 List of card numbers allocated
13 Supplementary maintenance
14 Section chapters
15 Layout of work cards

Figure Page

1 Layout of an aircraft Topic 5Q recovery from storage schedule 3
2 Example of a stand-alone Topic 5Q introduction page 4
3 Example of a stand-alone Topic 5Q work card 5

INTRODUCTION

1 The Topic 5Q contains work cards that detail the maintenance activities necessary to recover aircraft from storage. It consists of a series of preliminary pages followed by four sections. Each section represents a specific category of reserve as follows:

1.1 Section 1 - Reception (RECN).

1.2 Section 2 - Immediate Readiness Reserve (IRR).

1.3 Section 3 - Short Term Reserve (STR).

1.4 Section 4 - Long Term Reserve (LTR).

2 Aircraft allotted to Medium Term Reserve (MTR) are recovered in the same way as those allotted to STR.

3 Each section contains a series of chapters that represent each of the aircraft trades involved with the recovery activities and each chapter contains the appropriate work cards. The approved format for work cards is the MOD Form 707MS.

4 The layout of a Topic 5Q is as shown in Figure 1.

PRELIMINARY PAGES

Front cover

5 The front cover forms the title page of a Topic 5Q as described in Chapter 2-0. Examples of front covers are presented in Chapter 2-0, Figures 1 to 3.

Amendment record

6 The Amendment Record is a common preliminary page as described in Chapter 2-0. Examples of A4 size Amendment Records are presented in Chapter 2-0, Figures 4 to 7.

Record of Advance Information Leaflet (AIL) and Service Amendment Leaflets (SAL)

7 The Record of AILs and SALs is a common preliminary page as described in Chapter 2-0. Examples of A4 size Records of AILs and SALs are shown in Chapter 2-0, Figures 8 to 11.

Contents

8 The Contents page contains a list of headings that summarizes the make up of either a stand-alone Topic 5Q or the Sub-topic 5Q in a combined Topic 5LNP&Q. The Contents page is presented in the same way as the examples shown in Chapter 15-2, Figure 2 and Figure 3.

Introduction

9 The introduction describes the type of recovery from storage work cards contained in the schedule. It also provides supplementary information regarding their general use and completion. An example of a Topic 5Q Introduction page is shown in Figure 2.

Health and safety at work

10 The Health and Safety at Work page is presented in the same way as the example shown in Chapter 11-0, Figure 2.

Zonal plan

11 The Zonal Plan defines the various zones contained in an entire aircraft and allocates an appropriate identification number and description to each zone. The Zonal Plan is illustrated in the maintenance schedule preliminary pages only if a zonal plan is not provided in the Aircraft Topic 1. The Zonal Plan pages are presented in the same way as the examples shown in Chapter 3-1, Figures 21 and 22.

List of card numbers allocated

12 The List of Card Numbers Allocated illustrates, in tabular form, the numbers of the work card series that have been allocated for use in each section. The list does not represent the actual numbers of the work cards contained in a schedule. The Topic 5Q List of Card Numbers Allocated page is presented in the same way as the example shown in Chapter 15-2, Figure 5.

Supplementary maintenance

13 Supplementary Maintenance pages are included to facilitate the listing of other maintenance tasks, such as Technical Instructions, that are to be done at the same time as the preparation for storage. The Supplementary Maintenance page is presented in the same way as the example shown in Chapter 11-0, Figure 10.

SECTION CHAPTERS

14 The work cards in each section are grouped by trade into chapters and a representative example of a List of Chapters page is shown in Chapter 11-0, Figure 11.

LAYOUT OF WORK CARDS

15 The layout of work cards is as described in Chapter 11-0. An example of a Topic 5Q work card is shown in Figure 3.

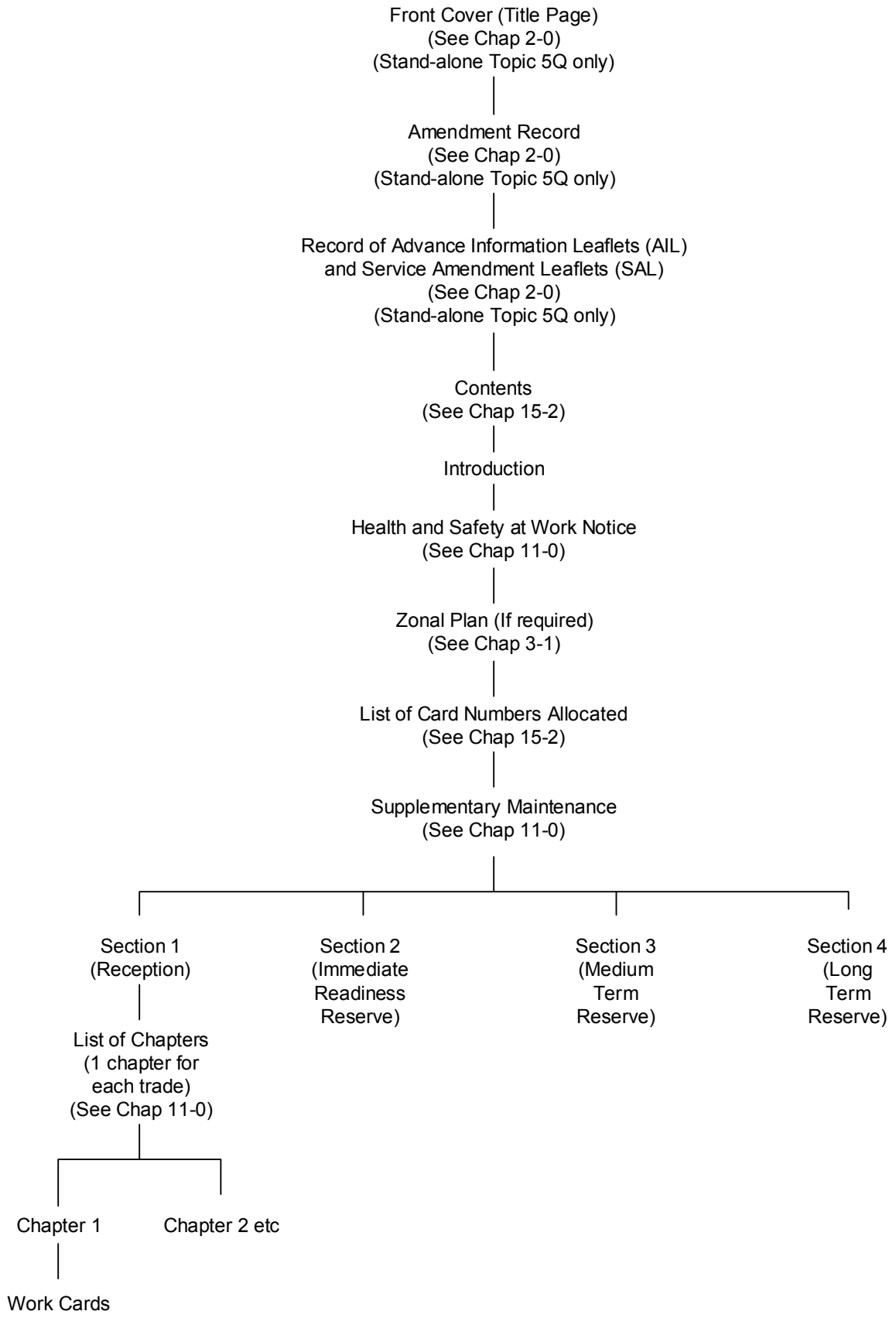

Figure 1 Layout of an aircraft Topic 5Q recovery from storage schedule

RECOVERY FROM STORAGE
AIRCRAFT NAME

AP Code-5Q

INTRODUCTION

1 This Topic 5Q contains a series of work cards, detailing the minimum requirements to recover a (Aircraft name) from storage.

2 This Topic 5Q is to be used in conjunction with the AMM, the Topic 5L and the Topic 5A2, which contain information on the following:

AMM - Aircraft Maintenance Manual.

5L - Storage Maintenance Schedule.

5A2 - Hazard and Maintenance Information.

3 When this Topic 5Q is in use, all work cards of a lower Category of Reserve are to be satisfied in addition to the higher Category of Reserve work cards (eg, Recovery from Short Term Reserve = Short Term + Reception + Immediate Readiness).

4 Each item in the Storage Maintenance List (SML) is allocated a SSIN, which identifies the item wherever it appears in the schedule. Assistance, preparation and recovery items for tasks detailed on work cards are annotated with the SSIN of the aircraft system and sub-system applicable to the item and the last two digits designated '00'.

5 SML items are amplified and displayed on work cards for use by maintenance personnel and contained in this Topic under the following sections.

Section 1 - Reception (RECN).

Section 2 - Immediate Readiness Reserve (IRR).

Section 3 - Short Term Reserve (STR).

Section 4 - Long Term Reserve (LTR) (Not issued).

6 Aircraft allotted to MTR are recovered in the same way as those allotted to STR.

7 A sheet headed 'List of Card Numbers Allocated' is shown following the Health and Safety at Work notice. Unused card numbers are provided to allow for any future amendment action.

8 New or amended matter will be indicated by a vertical line in the left hand margin to show the extent of the amendment. Amendment procedure is detailed in ▶MAP-01 Chapter 8.2◀.

E01234 ( ) (ix)/(x)

Figure 2 Example of a stand-alone Topic 5Q introduction page

MECHANICAL(AIRFRAME) Card 1	RECOVERY FROM STORAGE RECEPTION AIRCRAFT NAME	AP Code-5Q Sect 1 Chap 1	Maintenance Record Aircraft or Equipment Serial No:				MOD Form 707MS (Revised Jan 01) Date:	
INFORMATION IN THE TOPIC 5A2 IS TO BE CONSULTATED THROUGHOUT THE WORK DETAILED ON THIS CARD			Tradesman		Brief details of suspected fault(s) and SNOW(s)	Supervisor		
Associated cards	Power	Code	Man Hrs	Certification and TDM		Man Hrs	Certification and TDM	
	N/A							
BLOCK 1 DIMENSIONS AND AREAS - ZONES <u>Zone 000</u> 0630R01 Aircraft external surfaces. Look for damage and signs of leaks.								
E01234 ( )								

Figure 3 Example of a stand-alone Topic 5Q work card

CHAPTER 16-0

TOPIC 5M FLIGHT TEST SCHEDULE

CONTENTS

Para

1 Introduction
2 Publishing and maintenance

INTRODUCTION

1 The Flight Test Schedule (FTS) details those essential tests of the handling, performance and systems functionality considered essential to proving the airworthiness and safe operation of air vehicles. It is limited to testing those parts of the aircraft and its equipment that cannot be checked for proper operation on the ground following maintenance activity. When published, an FTS is to be maintained throughout the life of the type and mark of aircraft or equipment to which it refers.

PUBLISHING AND MAINTENANCE

2 The publication, revision and amendment of an FTS are the responsibility of the relevant platform Project Team Leader (PTL). While the PTL is responsible for producing and maintaining the FTS, the PTL may delegate the day-to-day responsibility for co-ordinating FTS requirements, and much of the detailed work on individual FTS, to an SME. OC Handling Squadron (HS), Boscombe Down, is the delegated SME for FTS for all aircraft and is responsible for the revision and amendment of FTS from source engineering material provided by the platform PTL. The policy and responsibilities for the production and maintenance of FTS are detailed in JAP 100 A-01 Chapter 8.1.2.

CHAPTER 17-0

TOPIC 5T OPERATIONAL TURN ROUND SCHEDULE

CONTENTS

Para

1 Introduction
3 Preliminary pages
3 Front cover
5 Amendment record
6 Record of Advance Information Leaflets (AIL) and Service Amendment Leaflets (SAL)
7 Introduction
8 List of sections
9 Section 1 - general information
16 Section 2 - turn round servicing
18 Section 3 - weapon loading
19 Section 4 - annexes

Figure		Page
1	Layout of a Topic 5T	4
2	Layout of a Topic 5T (continued)	5
3	Example of a Topic 5T front cover	6
4	Example of a Topic 5T introduction	7
5	Example of a Topic 5T introduction (continued)	8
6	Example of a Topic 5T list of sections	9
7	Example of a Topic 5T section 1 list of chapters	10
8	Example of a Topic 5T section 1 chapter 1 card	11
9	Example of a Topic 5T section 1 chapter 2 card	12
10	Example of a Topic 5T section 1 chapter 3 card	13
11	Example of a Topic 5T section 1 chapter 4 card	14
12	Example of a Topic 5T section 1 chapter 5 card	15
13	Example of a Topic 5T section 1 chapter 6 card	16
14	Example of a Topic 5T section 2 list of chapters	17
15	Example of a Topic 5T turn round servicing card	18
16	Example of a Topic 5T section 3 list of chapters	19
17	Example of a Topic 5T section 3 weapon loading work card	20
18	Example of a Topic 5T section 4 list of annexes	21
19	Example of a Topic 5T section 4 annex work card	22

INTRODUCTION

1 Operational Turn Round (OTR) Schedules detail the ground operations, maintenance and preparation activities necessary to turn round operational aircraft in the shortest possible elapsed time. The schedule combines the Turn Round or Replenishment servicing activities, as specified in the aircraft Topic 5A1 Section 1 MML, with refuelling and the loading of weapons and stores.

2 The Topic 5T consists of a series of preliminary pages followed by four sections. The layout of a Topic 5T is shown in Figure 1 and Figure 2.

PRELIMINARY PAGES

Front cover

3 The front cover forms the title page of an OTR schedule as explained in Chapter 2. The following reference to the 5A2 is to be printed in red on the front cover, immediately below the title:

"Information in the Topic 5A2 is to be consulted throughout the work contained in this schedule".

4 An example Topic 5T front cover is shown in Figure 3.

Amendment record

5 The Amendment Record is a common preliminary page as described in Chapter 2. Examples of Amendment Records are presented in Chapter 2-0, Figures 4 to 7.

Record of Advance Information Leaflets (AIL) and Service Amendment Leaflets (SAL)

6 The Record of AILs and SALs is a common preliminary page as described in Chapter 2. Examples of Records of AILs and SALs are shown in Chapter 2-0, Figures 8 to 11.

Introduction

7 The introduction provides supplementary information regarding the general use of an aircraft Topic 5T. An example of a Topic 5T Introduction is shown in Figure 4 and Figure 5.

List of sections

8 An example of a List of Sections is shown in Figure 6.

SECTION 1 - GENERAL INFORMATION

9 Section 1 consists of a series of chapters that contain general information, shown typically as:

9.1 Chapter 1 - Responsibilities.

9.2 Chapter 2 - Team Composition (include any trade specialisations).

9.3 Chapter 3 - Tool and Equipment Lists.

9.4 Chapter 4 - Aircraft Armed States.

9.5 Chapter 5 - Identification/Disposition Tables.

9.6 Chapter 6 - OTR Sequence Chart.

The List of Chapters shown above is entirely representative and may differ depending on specific aircraft requirements. An example Topic 5T Section1 List of Chapters is shown in Figure 7.

10 An example Topic 5T Section 1 Chapter 1 card is shown in Figure 8.

11 An example Topic 5T Section 1 Chapter 2 card is shown in Figure 9.

12 An example Topic 5T Section 1 Chapter 3 card is shown in Figure 10.

13 An example Topic 5T Section 1 Chapter 4 card is shown in Figure 11.

14 An example Topic 5T Section 1 Chapter 5 card is shown in Figure 12.

15 An example Topic 5T Section 1 Chapter 6 card is shown in Figure 13.

SECTION 2 - TURN ROUND SERVICING

16 Section 2 consists of a series of chapters that contain the flight servicing and other non-weapons aspects of the turn round servicing. One chapter exists for each member of the OTR team and an example of a typical Topic 5T Section 2 List of Chapters is shown in Figure 14.

17 The scheduled maintenance tasks are written as they appear in the MML and are identified by Schedule Identification Numbers (SINs), which appear written in brackets following the items to which they refer. An example of a Topic 5T Section 2 Turn Round Servicing work card is shown in Figure 15.

SECTION 3 - WEAPON LOADING

18 Section 3 consists of a series of chapters that contain the weapon loading tasks. One chapter exists for each member of the weapon loading team and an example of a typical Topic 5T Section 3 List of Chapters is shown in Figure 16. An example of a Topic 5T Section 3 weapon loading work card is shown in Figure 17.

SECTION 4 - ANNEXES

19 Annexes contain the weapon loading and replenishment procedures required for the OTR. Replenishment procedures are listed first in the sequence of annexes, followed by any other flight servicing related activities. Weapon loading procedures are listed last. An example of a typical Topic 5T Section 4 List of Annexes is shown in Figure 18. An example of a Topic 5T Section 4 annex work card is shown in Figure 19.

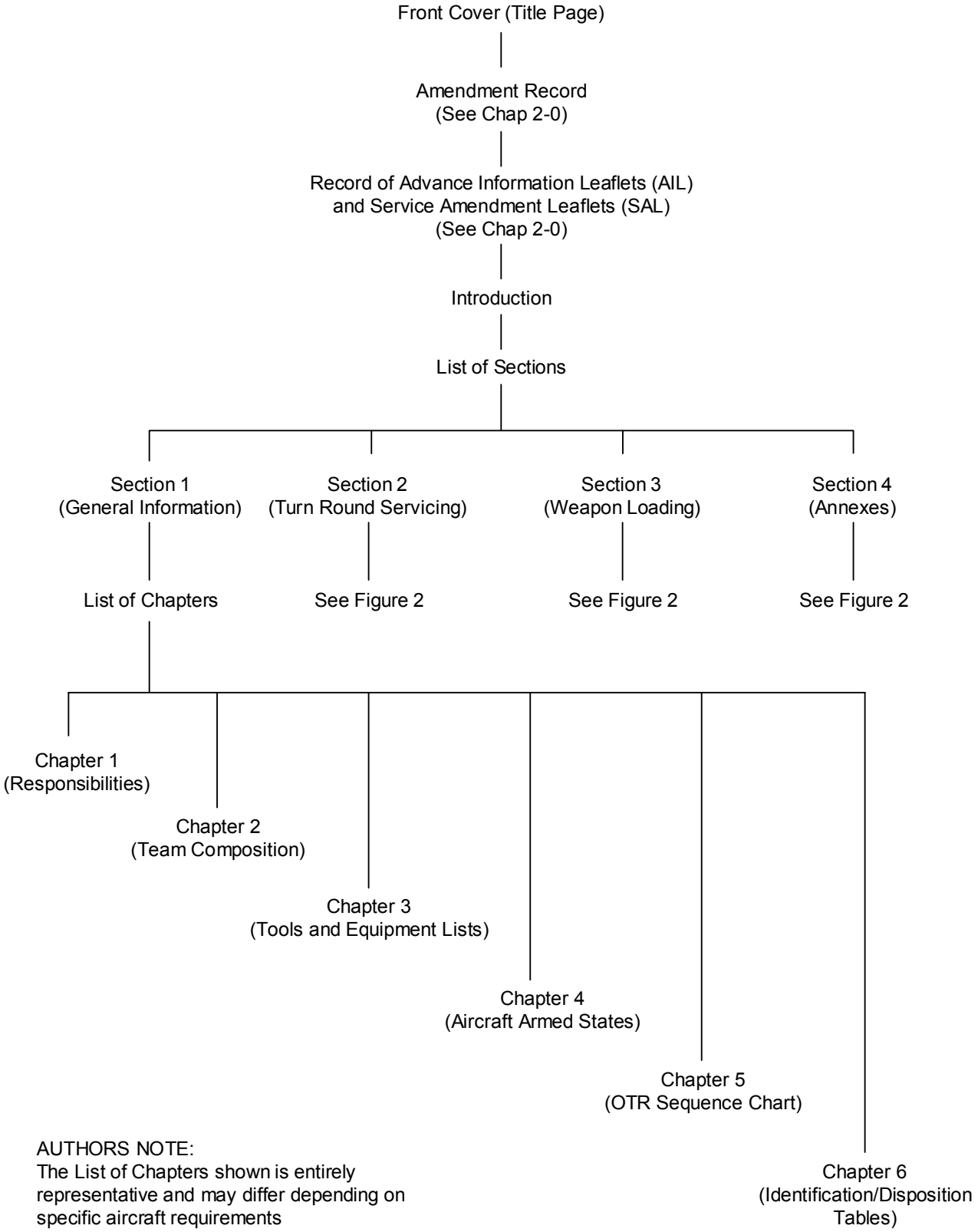

Figure 1 Layout of a Topic 5T

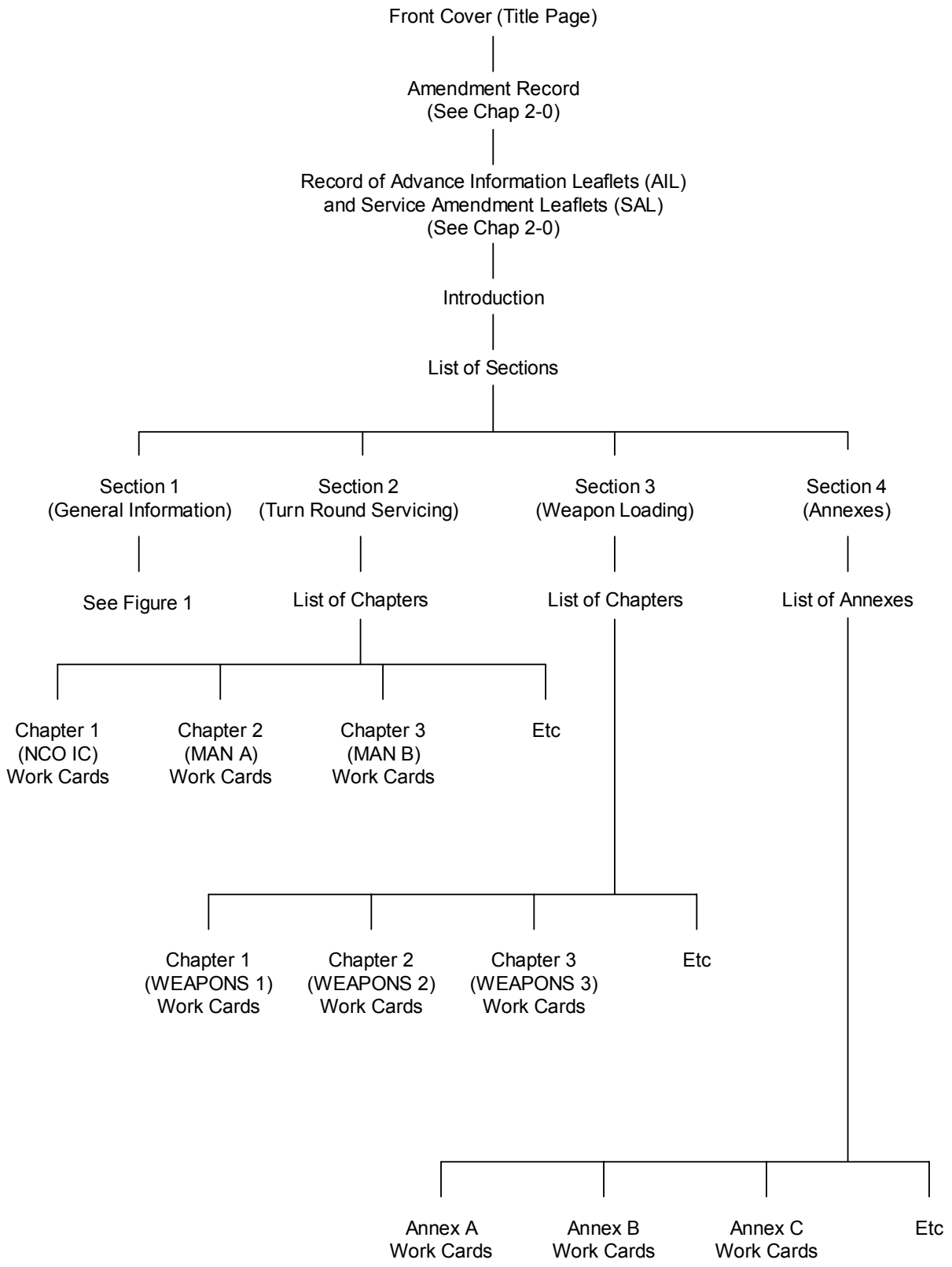

Figure 2 Layout of a Topic 5T (continued)

AP Code-5T
Month Year

Ministry of Defence

AIRCRAFT NAME

OPERATIONAL TURN ROUND SCHEDULE

INFORMATION IN THE TOPIC 5A2 IS TO BE CONSULTED THROUGHOUT THE WORK DETAILED IN THIS SCHEDULE

Sponsored for use within
UK Military Aviation
by
(Designated) PTL

Publication Organization:
as nominated by Sponsor

Service users should send their comments through
The channel prescribed in:
►MAP-01 Chapter 8◄

Page (i)/(ii)

Figure 3 Example of a Topic 5T front cover

OPERATIONAL TURN ROUND AP Code-5T
AIRCRAFT NAME

INTRODUCTION

1 Only engineering personnel who have been trained and certified as competent are authorized to do the servicing contained in this schedule. The weapons elements of this schedule are only to be completed by engineering personnel certified as competent in accordance with ▶MAP-01 Chapter 0.7◀.

2 This schedule details all the activities required to turn round the aircraft for the following weapon loads.

2/4 x Sidewinder AIM 9L missile.
2/4 x ASRAAM missile.
4 x Skyflash missile.
4 x AIM 120B AMRAAM missile.
1 x 27mm Mauser Gun.
2250/1500 Ltr External Fuel Tanks - As required, for Inbd and Shoulder (Ferry) Pylons.
Vinten 210 and 400 Series Chaff and Flare.
BOL304A Chaff Loading.

3 In the event of any unserviceability, Sqn Ops is to decide if the OTR should proceed and the pilot informed.

4 When an OTR servicing is required it is possible that either the armament team, or refueller, may not be immediately available. In that case the OTR may commence and any of the above may start when the resources become available, provided that the aircraft has been recovered to the Initially Armed State.

5 During full NBC conditions, communication with the crew is to be via the aircraft intercom system.

6 The documentation is to be completed for the operational turn round.

7 If any person has to enter the cockpit after switch checks are completed, the NCO IC Weapons is to be informed.

E1234( ) Page (vii)

Figure 4 Example of a Topic 5T introduction

8 Serviceable stores may be downloaded during or at the end of an OTR by the OTR team in accordance with the procedures in the Topic 5A6. During the download other OTR activities, except weapon upload, may be progressed and external/internal power may be 'ON' as permitted during the equivalent upload in the OTR schedule.

9 Unserviceable stores may be downloaded by an OTR team only in accordance with the procedures in Topic 5A6. The senior engineer officer is to detail any additional safety precautions necessary. No other maintenance activity may be done concurrent with the download. Where 5A6 procedures cannot be followed then a specialist weapon team of Eng Tech/Mech W is to be used under the direction of the senior engineer officer.

10 The weapons element of the OTR schedule may be used for the initial generation of aircraft provided that the appropriate flight servicing (including refuelling) has been completed.

11 This schedule is primarily a wartime schedule and has been written as such. It is not to be used in support of normal flying training but may be used during station exercises and evaluations provided that the following constraints are observed:

11.1 Hot winch backs are not permitted on combat or finally armed aircraft loaded with live weapons/stores.

11.2 Leak and flow checks are to be done if external fuel tanks are fitted and are to be flown.

11.3 Prior to the exercise, tyres are to be inflated in accordance with AP Code-2(N/A/R)1 Leaflet XXX.

11.4 Aircraft may be 'flown off' this schedule during exercises and evaluations, provided that the preparation for standby/standby servicing/after flight servicing back stops detailed in ▶MAP-01 Chapter 2.8◀ are observed.

11.5 An aircraft may also be launched directly from a single recertification OTR (and subsequent weapon down load) immediately following a previous sortie. This authorization does not, however, extend to the launching of an aircraft following a period as a weapon load trainer.

12 New or amended matter will be indicated by vertical lines in the outer margin to show the extent of the amendment. Amendment procedure is detailed in ▶MAP-01 Chapter 8◀.

Figure 5 Example of a Topic 5T introduction (continued)

OPERATIONAL TURN ROUND AP Code-5T
AIRCRAFT NAME

LIST OF SECTIONS

Section 1 - General

Section 2 - Operational Turn Round Servicing

Section 3 - Weapon Loading

Section 4 - Annexes

E1234( ) Page (ix)/(x)

Figure 6 Example of a Topic 5T list of sections

```
                         OPERATIONAL TURN ROUND                AP Code-5T
                             AIRCRAFT NAME                         Sect 1
                          GENERAL INFORMATION

                            LIST OF CHAPTERS

                                                              No. of
                                                              Cards

Chapter 1 - Responsibilities  ...............................   2

Chapter 2 - Team Composition  ...............................   1

Chapter 3 - Tools and Equipment Lists  ......................   3

Chapter 4 - Aircraft Armed States     .......................   2

Chapter 5 - OTR Sequence Chart  .............................   1

Chapter 6 - Identification/ Disposition Tables ..............   1

E1234( )
```

Figure 7 Example of a Topic 5T section 1 list of chapters

Card 2 OPERATIONAL TURN ROUND AP Code-5T
AIRCRAFT NAME Sect 1
GENERAL INFORMATION Chap 1

RESPONSIBILITIES

RESPONSIBILITIES OF NCO IC WEAPON LOADING TEAM (WPNS 1)

The NCO IC weapon loading team is responsible to the SNCO IC OTR Servicing/HAS operations for:

1 Making sure that all relevant safety precautions are observed.

2 Briefing all members of the OTR team of all relevant safety precautions.

3 Making sure that all members of the weapons/OTR team are aware of their respective duties.

4 Ascertaining the weapon load required and making sure that all stores are serviceable.

5 Making sure that the electrical power supply is switched ON/OFF as appropriate when required.

6 Making sure that all armament ground support equipment and tools are available, serviceable and correctly positioned in accordance with Sqn SOPs.

7 Making sure that Final Arming is done when instructed by the SNCO IC OTR Servicing.

8 Making sure that all weapon documentation is completed.

9 Making sure that all tank fitting ground support equipment and tools are available, serviceable and correctly positioned in accordance with Sqn SOPs.

10 Making sure that all tanks have been prepared and checked.

11 Making sure that tank fitting documentation is completed.

E1234(4)

Figure 8 Example of a Topic 5T section 1 chapter 1 card

```
Card 1                    OPERATIONAL TURN ROUND                 AP Code-5T
                               AIRCRAFT NAME                         Sect 1
                           GENERAL INFORMATION                       Chap 2

                             TEAM COMPOSITION

SERVICING TEAM COMPOSITION

SNCO IC Turn round                        Trade Group 1 or 2 (Air)

Man A Tech/Mech                           Trade Group 1 or 2 (Air)

Man B Tech/Mech                           Trade Group 1 or 2 (Air)

Additional for Recce Role and ECM/Phimat Role.

Man C Tech/Mech                           Trade Group 1 or 2 (Air)

Man D Tech/Mech                           Trade Group 1 or 2 (Air)

WPNS 1 SNCO/NCO IC                        A Tech W

WPNS 2 Tech/Mech                          A Tech W/Mech W

WPNS 3 Tech/Mech                          A Tech W/Mech W

WPNS 4 Tech/Mech                          A Tech W/Mech W

Personnel of Trade Group 1 or 2 (Air) when authorized by an Authority
Level J or K can do WPNS 2 and WPNS 4 tasks.

Man C and Man D tasks may be done by one authorized person if the
aircraft is in a non-recce role.

    .

E1234( )
```

Figure 9 Example of a Topic 5T section 1 chapter 2 card

Card 1 OPERATIONAL TURN ROUND AP Code-5T
AIRCRAFT NAME Sect 1
GENERAL INFORMATION Chap 3

TOOLS AND EQUIPMENT LISTS

TOOLS AND EQUIPMENT LIST - PART 1

Sect/Ref	Item	Qty
1C/1365592	Screwdriver	1
1C/1365599	Screwdriver	1
1C/3315502	Bit Holder	2
1C/9106229	Spanner 3/8 in. x 7/16 in. BSF DE	1
1C/9106289	Spanner 10 mm x 11 mm DE	1
1C/9106293	Spanner 18 mm x 19 mm DE	1
1L/1275597	Handle 3/8 in. SD	1
1L/1931467	Socket 14 mm x 3/8 in. SD	1
1L/7944222	Bit No.10	1
1L/7944223	Bit 1/4 in.	1
1L/7944224	Bit S16A	1
1C/5282892	Bit Holder	1
1L/9106324	Brace 3/8 in. SD	1
1L/9106329	Handle Ratchet 3/8 in. SD	1
4G/13326	Gauge 0 to 6000 PSI	1
4G/1075943	Gauge	1
4G/2031040	Adapter	1
4G/2031043	Adapter	1
4G/2051077	Gun Fluid Replenishment	2
4G/2099181	Adapter	1
4G/4420033	Gauge 0 to 1500 PSI	1
4G/4420034	Gauge 0 to 3500 PSI	1
4G/4710421	Gauge	1
4GD/2056982	Adapter	1
5A/1067077	Torch	2
6C/4653930	Fuel Drain	1
5120-99-1240461	Bottle Key	1
1720-99-7566118	Gun Coolant	1
CSDE/TOR/GSS/139	19 mm Crow Foot	1
	Windscreen Cleaning Kit	1
CSDE/TOR/GSS/16	Oil Overflow Draining Tool	1

E1234(5) Continued

Figure 10 Example of a Topic 5T section 1 chapter 3 card

Card 1 OPERATIONAL TURN ROUND AP Code-5T
AIRCRAFT NAME Sect 1
GENERAL INFORMATION Chap 4

AIRCRAFT ARMED STATES

TABLE 1

1 The aircraft/store safety devices are to be positioned as shown in this table only when called for by the NCO IC Aircraft Servicing or the Aircraft Captain.

Aircraft/ Store	Safety Device	Position	Initially Armed	Finally Armed	Combat Armed
Aircraft Weapon System	Master Armament Safety Switch Key *	Fitted *			X
		Removed *	X	X	
Ejector Release Units	Ground Safety Pins	Fitted	X	X	
		Removed			X
Sky Flash/ TEL Launcher	Ground Safety Pins	Fitted	X		
		Removed		X	X
Sidewinder /ASRAAM LAU-7A Launcher	Detent Wrench/ Safety Pins	Fitted	X		
		Removed		X	X
Mauser 27 mm Gun	Gun Firing Lead	Connected		X	X
		Disconnected	X		

* Applicable only to aircraft Pre Mod 01674

E1234(5) Continued

Figure 11 Example of a Topic 5T section 1 chapter 4 card

Card 1 | OPERATIONAL TURN ROUND | AP Code-5T
AIRCRAFT NAME | Sect 1
GENERAL INFORMATION | Chap 5

IDENTIFICATION/DISPOSITION TABLES

ERU/LAUNCHER CARTRIDGE REQUIREMENTS TABLE

Equipment	Weapon Station	Weapon/Store	Cartridge Requirements
Heavy Duty Ejector Release Unit (HDERU)	Inboard Pylon	External Fuel Tank	2 x CCU 43 or 2 x ARD 446
Sky Flash Launcher or AMRAAM TEL Launcher	Fuselage	Sky Flash Missile or AMRAAM AIM-120B Missile	1 x Mk 1 No.301 Cartridge Ejector Release Unit - Primary
			1 x Mk 1 No.302 Cartridge Ejector Release Unit - Secondary
			1 x Mk 1 No.303 Cartridge Ejector Release Unit - Retraction
Recocking Cartridge	Fuselage	Mauser Gun	Recocking Cartridge (5 off)

HEAVY DUTY ERU CARTRIDGE HOLDER/THROTTLE TABLE

Store	Location	Inboard Pylon	
		Cartridge Holder Length	Throttle Size
Fuel Tank External	Fwd	12.5 mm	7
	Aft	12.5 mm	7

E1234(5) | Continued

Figure 12 Example of a Topic 5T section 1 chapter 5 card

Card 1 | OPERATIONAL TURN ROUND | AP Code-5T
AIRCRAFT NAME | Sect 1
GENERAL INFORMATION | Chap 6

OTR SEQUENCE CHART

NCO IC		FIT TANKS					
MAN A		FIT TANKS	DO FLIGHT SERVICING				
MAN B		FIT TANKS	DO FLIGHT SERVICING		ASSIST LOADING TEAM		
WPNS 1	INITIAL ARM DISARM FLARE DISARM GUN GAUGE BARREL	FIT TANKS	DO WING SWEEP NO VOLTS LAU 7A BOL 304A	MISSILE LOADING HDERU ARM GUN LOAD	MMS CHECKS	FLARE AND BOL 304A CHAFF LOAD	FINAL ARM
WPNS 2	INITIAL ARM	PREP STNS 1 AND 2	PREP SKY FLASH/TEL LAUNCHERS	MISSILE LOADING	ASSIST WPNS 1		
WPNS 3	POSITION KITS, EQUIPMENT	ASSIST WPNS 1 FIT TANKS	PREP LAU 7A BOL 304A	ASSIST WPNS 1 SRAAM ASSIST WPNS 2 MRAAM	TOOL CHECK		
WPNS 4	POSITION KITS, EQUIPMENT	ASSIST WPNS 1 FIT TANKS	ASSIST WPNS 1	ASSIST WPNS 1	TOOL CHECK		
EXT POWER	ON	OFF	ON	OFF	ON	OFF	

Note: The sequence of operation for MAN A and B is flexible under the direction of the NCO IC OTR.

E1234(5) Continued

Figure 13 Example of a Topic 5T section 1 chapter 6 card

```
                         OPERATIONAL TURN ROUND                AP Code-5T
                              AIRCRAFT NAME                        Sect 2
                           TURN ROUND SERVICING

                             LIST OF CHAPTERS

                                                              No. of
                                                              Cards

Chapter 1 - NCO IC OTR.....................................    2

Chapter 2 - MAN A .........................................    1

Chapter 3 - MAN B .........................................   3

E1234( )
```

Figure 14 Example of a Topic 5T section 2 list of chapters

MAN A Card 1	OPERATIONAL TURN ROUND AIRCRAFT NAME TURN ROUND SERVICING	AP Code-5T Sect 2 Chap 1

1. Preparation

1.1	Ground equipment and weapons/stores to be loaded.	Position as instructed by SNCO IC OTR.

Sub-item 1.2 is applicable only to HAS operations.

1.2	HAS.	Prepare for aircraft winch/push back.

2. Aircraft Arrival

2.1	Aircraft.	(i) See in. (ii) Position for OTR.

External areas includes all probes, aerials, intake and exhaust ducts, pylons and any fuel tanks, ECM pod and/or Phimat pod fitted to pylons and AN/ALE 40 dispensers fitted to the underside of engine bay doors.

3. General

3.1	External areas. (0700001).	Look for damage and signs of leaks. (Flaps lowered and slats extended).
3.2	Ducts, louvres, intakes and vents. (1510001).	Make sure they are clear.

4. Front Fuselage Port

4.1	Brake accumulator Pressure gauge. (2050003).	Do a pressure check (100 bar) (1450 lbf/in2).
4.2	Anti-shimmy pressure gauge. (2040001).	Do a pressure check (30 to 40 bar) (420 to 560 lbf/in2).

E1234( ) Continued

Figure 15 Example of a Topic 5T turn round servicing card

```
                         OPERATIONAL TURN ROUND                AP Code-5T
                              AIRCRAFT NAME                        Sect 3
                             WEAPON LOADING

                            LIST OF CHAPTERS

                                                              No. of
                                                              Cards

Chapter 1 - WEAPONS 1.......................................    8

Chapter 2 - WEAPONS 2 ......................................    1

Chapter 3 - WEAPONS 3 ......................................   1

Chapter 3 - WEAPONS 4 ......................................   1

E1234( )
```

Figure 16 Example of a Topic 5T section 3 list of chapters

WEAPONS 1 Card 1	OPERATIONAL TURN ROUND AIRCRAFT NAME WEAPON LOADING	AP Code-5T Sect 3 Chap 1

1.	Weapon/Store Preparation	
1.1	Weapon/store (As applicable).	Do the Preparation procedure (Annex F, G and/or H).
2.	Aircraft Arrival	
2.1	Aircraft.	Put into 'Initially Armed' state when instructed by NCO IC OTR.
2.2	'Aircraft Armed' notices. (a) Large (2 off).) (b) Small.)	Make sure they are displayed.
3.	Aircraft General	
3.1	Aircraft.	(i) Do the safety switch check (Annex A). (ii) Identify unexpended stores with pilot. (ii) Tell pilot of safety precautions.
4.	Vinten Flare	
4.1	Flare magazine.	Remove (Annex J or N).

E1234( ) Continued

Figure 17 Example of a Topic 5T section 3 weapon loading work card

OPERATIONAL TURN ROUND
AIRCRAFT NAME
WEAPON LOADING

AP Code-5T
Sect 4

LIST OF ANNEXES

	No. of Cards
Annex A - Safety Switch Checks	2
Annex B - Probe Nozzle Sliding Sleeve Force Check	1
Annex C - Hydraulic Reservoir Bleeding and Replenishment	2
Annex D - Secondary Power System Oil Replenishment	1
Annex E - Power Plant Oil System Replenishment	2
Annex F - Fuel Tank/Pylon Preparation and Loading	5
Annex G - Sidewinder AIM 9L Missile/Launcher, Preparation and Loading	6
Annex H - Sky Flash Missile/Launcher, Preparation and Loading	6
Annex I - Ammunition Box Preparation, Gun Disarm, Re-arm	1
Annex J - Air Intake/Jet Pipe Checks	8
Annex K - No Volts Check	3
Annex L - Mauser Gun Barrel - Gauging	2
Annex M - BOL 304A Launcher - Chaff Dispenser Loading	4
Annex N - ASRAAM Missile - Preparation and Loading	8
Annex O - Ejection Seat Harness Restraint Line Stowage	3

E1234( )

Figure 18 Example of a Topic 5T section 4 list of annexes

```
ANNEX B                    OPERATIONAL TURN ROUND                  AP Code-5T
Card 1                          AIRCRAFT NAME                          Sect 4
                                   ANNEXES

ANNEX TITLE

1.     Aircraft Preparation

1.1    Mainplane protective       Position either side of overwing
       mat (2 off).               pylon.

2.     LAU 7A Launcher - Preparation

A pressurized nitrogen receiver is to be fitted to the LAU 7A launcher
at all times to prevent contamination of the coolant system.

2.1    Fin retainer               Examine.
       assembly
       (2 off).

2.2    Launcher nose
       assembly.
       (a) Latch button.          Push.
       (b) Fairing.               Open.

2.3    Launcher umbilical         (i)     Remove buffer block.
       retract mechanism.         (ii)    Examine.

2.4    Launcher umbilical
       connector.
       (a) Blanking cap.          Remove.
       (b) Umbilical              Examine.
           connector.
       (c) Used umbilical         (i)     Remove.
           ((If applicable).      (ii)    Discard.
       (d) Blanking cap.          Install.

2.5    Detent hold down           Remove.
       pin.

E1234( )                                                        Continued
```

Figure 19 Example of a Topic 5T section 4 annex work card

CHAPTER 18-0

OPERATIONAL READINESS SERVICING SCHEDULES - GENERAL

CONTENTS

Para

1 Introduction

Table Page

1 Operational readiness servicing schedules 1

INTRODUCTION

1 Operational Readiness Servicing Schedules (ORSS) comprise the preventive maintenance and weapon loading/off-loading activities, if applicable, necessary to maintain an aircraft in a state of continuous operational readiness for up to 30 days.

2 Table 1 shows the various topics of ORSS in use and the associated chapter numbers within this publication that describes them in more detail.

TABLE 1 OPERATIONAL READINESS SERVICING SCHEDULES

TITLE	TOPIC	CHAPTER
ORSS - Conventional Weapons Role	5U1	18-1
ORSS - Special Weapons Role	5U2	18-2
ORSS - Unarmed Aircraft	5U3	18-3

CHAPTER 18-1

TOPIC 5U1 OPERATIONAL READINESS SERVICING SCHEDULE - CONVENTIONAL WEAPONS ROLE

CONTENTS

Para

1 Introduction
2 Format of a Topic 5U1
6 Preliminary pages
6 Front cover
7 Amendment record
8 Record of Advance Information Leaflets (AIL) and Service Amendment Leaflets (SAL)
9 Contents
10 Introduction
11 Special instructions
12 Phase 1 - Preparation for standby
13 Phase 2 - Standby servicing
14 Phase 3 - Release from standby
15 Layout of work cards

Figure		Page
1	Layout of an aircraft Topic 5U1 ORSS - Phase 1	4
2	Layout of an aircraft Topic 5U1 ORSS - Phase 2	5
3	Layout of an aircraft Topic 5U1 ORSS - Phase 3	6
4	Example of an aircraft Topic 5U1 front cover	7
5	Example of an aircraft Topic 5U1 contents page	8
6	Example of an aircraft Topic 5U1 introduction page (recto)	9
7	Example of an aircraft Topic 5U1 introduction page (verso)	10
8	Example of an aircraft Topic 5U1 special instructions page (recto)	11
9	Example of an aircraft Topic 5U1 special instructions page (verso)	12
10	Example of an aircraft Topic 5U1 list of sections page	13
11	Example of an aircraft Topic 5U1 list of chapters page	14
12	Example 1 of an aircraft Topic 5U1 work card	15
13	Example 2 of an aircraft Topic 5U1 work card	16

INTRODUCTION

1 The general requirements of an aircraft Operational Readiness Servicing Schedule (ORSS) are detailed in Chapter 18-0. This chapter details the specific requirements of an aircraft Topic 5U1, which is the ORSS for aircraft in the conventional weapons role.

FORMAT OF A TOPIC 5U1

2 A Topic 5U1 consists of preliminary pages followed by three phases, which represent the following stages of operational readiness:

2.1 Phase 1 - Preparation for standby.

2.2 Phase 2 - Standby servicing.

2.3 Phase 3 - Release from standby.

3 The layout of an aircraft Topic 5U1 and the details of Phase 1 are shown in Figure 1.

4 The layout of an aircraft Topic 5U1 and the details of Phase 2 are shown in Figure 2.

5 The layout of an aircraft Topic 5U1 and the details of Phase 3 are shown in Figure 3.

PRELIMINARY PAGES

Front cover

6 The front cover forms the title page of a Topic 5U1, an example of which is shown in Figure 4.

Amendment record

7 The Amendment Record is a common preliminary page as described in Chapter 2. Examples of Amendment Records are presented in Chapter 2-0, Figures 4 to 7.

Record of Advance Information Leaflets (AIL) and Service Amendment Leaflets (SAL)

8 The Record of AILs and SALs is a common preliminary page as described in Chapter 2. Examples of Records of AILs and SALs are shown in Chapter 2-0, Figures 8 to 11.

Contents

9 The Contents page contains a list of headings that summarizes the make up of an aircraft Topic 5U1. An example Topic 5U1 Contents page is shown in Figure 5.

Introduction

10 The introduction provides supplementary information regarding the general use of an aircraft Topic 5U1. An example of a Topic 5U1 Introduction is shown in Figure 6 and Figure 7.

Special instructions

11 The special instructions information regarding control of access, specific trade/qualifications required and reference to orders covering maintenance on armed aircraft. Examples of a Topic 5U1 Special Instruction pages are shown in Figures 8 and 9.

PHASE 1 - PREPARATION FOR STANDBY

12 Phase 1 is divided into the following sections:

12.1 Section 1 - Preparation of Aircraft.

12.2 Section 2 - Loading of Weapons.

12.3 Section 3 - Final Preparation for Standby.

An example List of Sections page is shown in Figure 10. Each section is divided into a series of chapters that represent each of the team members involved in the associated activity. An example List of Chapters page is shown in Figure 11.

PHASE 2 - STANDBY SERVICING

13 Phase 2 is divided into the following sections, as required:

13.1 Section 1 - Standby Servicing.

13.2 Section 2 - Pre Take-off/Dispersal Actions.

13.3 Section 3 - Recovery Servicing After Sortie/Dispersal.

13.4 Section 4 - Recovery Servicing After Start Up.

13.5 Section 4 - Recovery Servicing After taxi.

Each section is divided into a series of chapters that represent each of the team members involved in the associated activity as shown in Figure 2.

PHASE 3 - RELEASE FROM STANDBY

14 Phase 2 is divided into the following sections, as required:

14.1 Section 1 - Weapon Off-loading.

14.2 Section 2 - Aircraft Servicing After Weapon Off-loading.

Each section is divided into a series of chapters that represent each of the team members involved in the associated activity as shown in Figure 3.

LAYOUT OF WORK CARDS

15 Work cards are written as items and operations in a logical sequence. Items appear in numerical sequence throughout each chapter. Reference is to be made to other topics as necessary.

16 All preventive maintenance items are to be derived from the Master Maintenance List (MML) and identified by Schedule Identification Number (SIN).

17 Cards are numbered sequentially throughout each chapter.

18 When an operation detailed on a work card is hazardous, a suitable warning or caution is entered immediately prior to that operation.

19 Examples of Topic 5U1 work cards are shown in Figures 12 and 13.

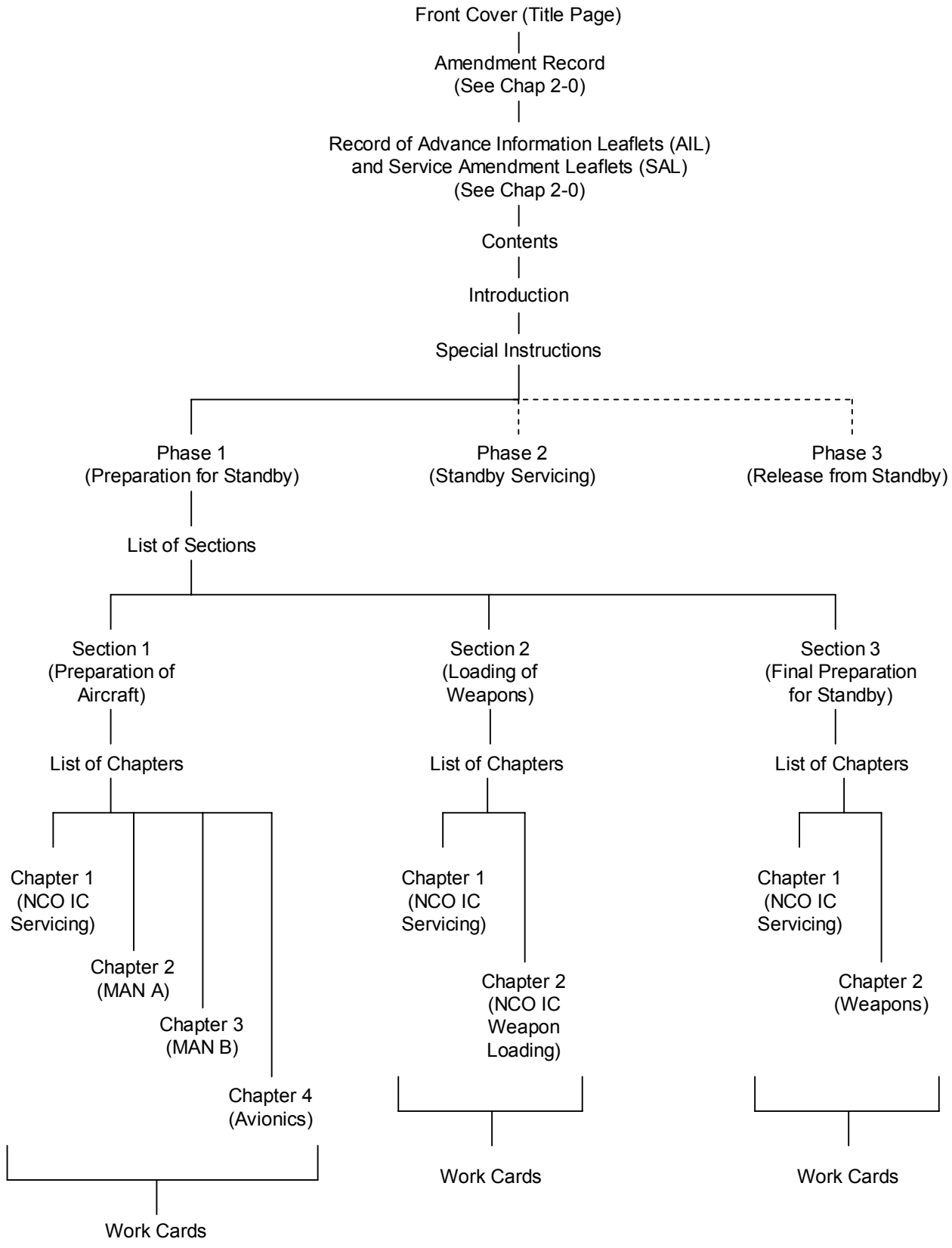

Figure 1 Layout of an aircraft Topic 5U1 ORSS - Phase 1

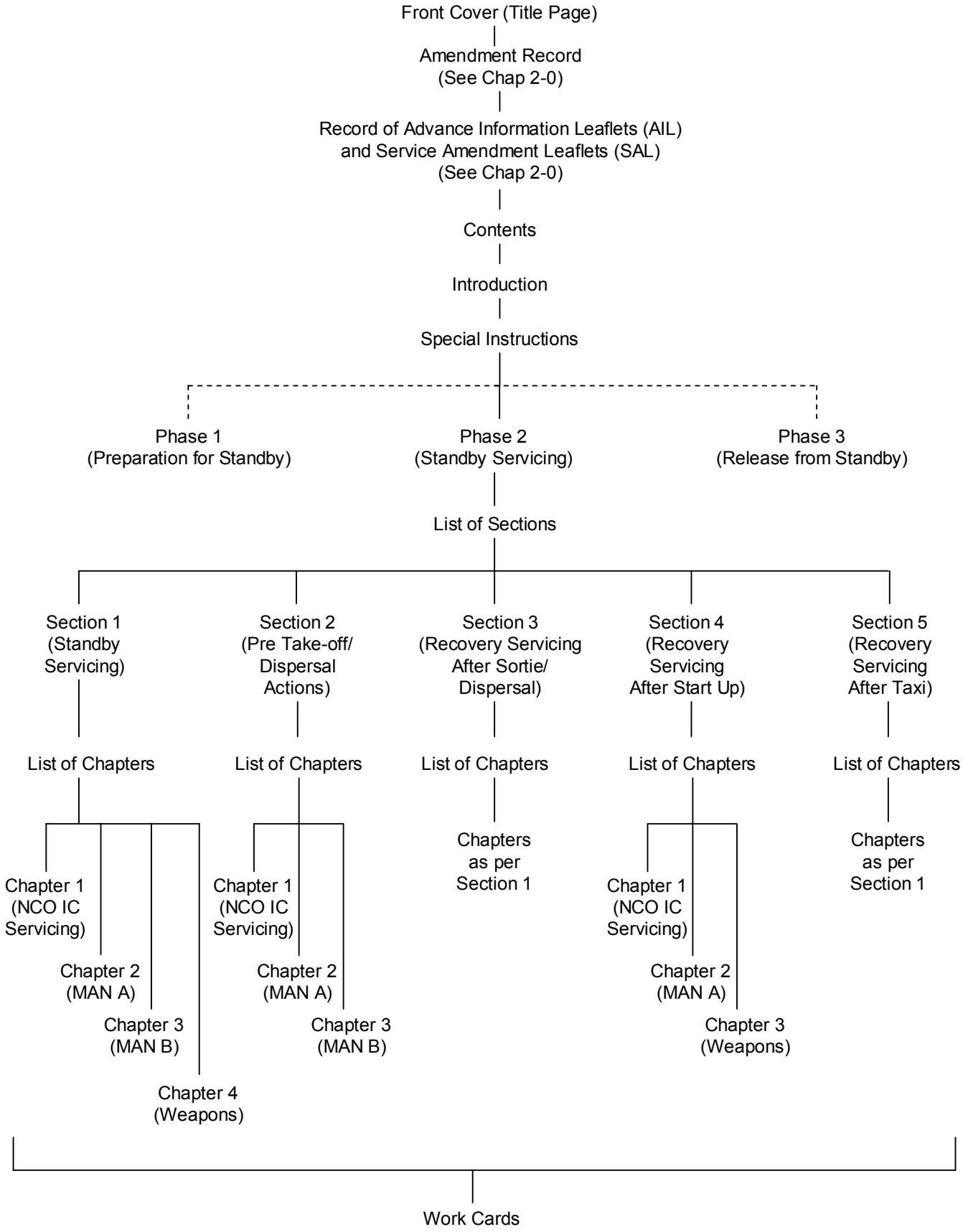

Figure 2 Layout of an aircraft Topic 5U1 ORSS - Phase 2

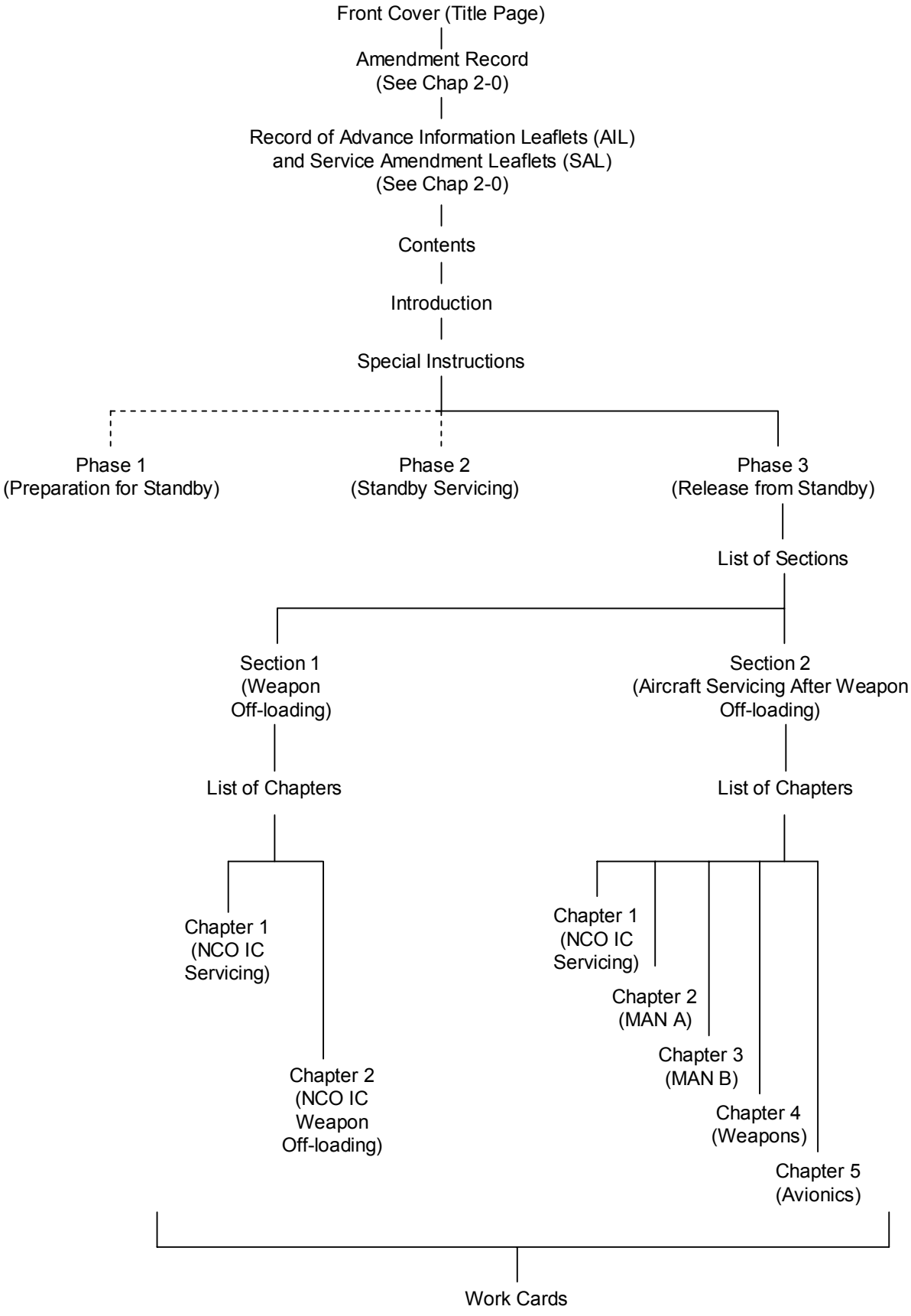

Figure 3 Layout of an aircraft Topic 5U1 ORSS - Phase 3

AP Code-5U1
Month Year

Ministry of Defence

AIRCRAFT NAME

OPERATIONAL READINESS SERVICING SCHEDULE
CONVENTIONAL WEAPONS ROLE

INFORMATION IN THE TOPIC 5A2 IS TO BE CONSULTED THROUGHOUT THE WORK DETAILED IN THIS SCHEDULE

Sponsored for use within
UK Military Aviation
by
(Designated) PTL

Publication Organization:
as nominated by Sponsor

Service users should send their comments through
The channel prescribed in:
►MAP-01 Chapter 8◄

Page (i)/(ii)

Figure 4 Example of an aircraft Topic 5U1 front cover

AP Code-5U1

OPERATIONAL READINESS SERVICING
CONVENTIONAL WEAPONS ROLE
AIRCRAFT NAME

CONTENTS

Preliminary Material — Page

Title page ..... (i)/(ii)
Amendment record ..... (iii) and (iv)
Record of Advance Information
Leaflets (AIL) and Service Amendment
Leaflets (SAL) ..... (v) and (vi)
Contents list (This page) ..... (vii)/(viii)
Introduction ..... (ix) and (x)
Special instructions ..... (xi) and (xii)

Phase 1 - Preparation for standby.

Phase 2 - Standby servicing.

Phase 3 - Release from standby.

E1234( ) Page (vii)/(viii)

Figure 5 Example of an aircraft Topic 5U1 contents page

AP Code-5U1

OPERATIONAL READINESS SERVICING
CONVENTIONAL WEAPONS ROLE
AIRCRAFT NAME

INTRODUCTION

1 This Topic 5U1, Operational Readiness Servicing (ORS) has been produced to detail the minimum amount of maintenance required to maintain the aircraft and weapon system in a state of readiness for a period of up to 30 days.

2 This Topic 5U1 is applicable to aircraft in the following role/weapons combinations:

2.1 Fuel tanks 1500 Ltr - Stations 3, 4, 7 and 8.

2.2 Fuel tanks 2250 Ltr - Stations 3 and 4.

2.3 27mm Mauser gun.

2.4 Twin store carrier (TSC) - Stations 5, 6, 9, and 10.

2.5 CBU-87 Cluster bomb - Stations 5, 6, 9, 10 and 11.

2.6 1000 lb bomb - Stations 5, 6, 9, 10 and TSC.

2.7 600 lb Cluster bomb - Stations 5, 6, 9, 10 and TSC.

2.8 Paveway II 1000 lb LGB - Stations 5, 6 and 11.

2.9 Paveway III 2000 lb LGB - Stations 7 and 8.

2.10 ALARM - Stations 3, 3a, 4, 4a, 7, 8, and 11.

2.11 Sidewinder AIM 9L missile - Stations 3a and 4a.

2.12 BOZ 107 chaff and flare.

2.13 Stormshadow CASOM - Stations 3, 4, 7 and 8.

2.14 Brimstone AAAW - Stations 5, 6, 9 and 10.

2.15 RAPTOR recce pod - Station 7 (Station 8 in pod ferry role).

2.16 Vinten recce pod - Station 11.

E1234( ) Page (ix)

Figure 6 Example of an aircraft Topic 5U1 introduction page (recto)

AP Code-5U1

3 This Topic 5U1 is divided into 3 phases:

3.1 Phase 1 - Preparation for Standby Servicing.

3.2 Phase 2 - Standby Servicing.

3.3 Phase 3 - Release from Standby.

4 Phase 2 is based on the aircraft role/weapons combination being serviceable and is dependant on all actions in Phase 1 being completed before Phase 2 Servicing is started.

5 The Special Instructions contained in this topic are in addition to and are to be read in conjunction with the aircraft Hazard and Maintenance Information contained in the Topic 5A2.

6 Aircraft may be released from standby as follows:

6.1 By completing all servicings detailed in Phase 3.

OR

6.2 After flying direct from standby, provided each of the following conditions are complied with:

a. Weapons are off-loaded in accordance with Phase 3 Section 1.

b. Phase 2 Section 1 Standby Servicing is current.

c. The aircraft is not re-roled.

AMENDMENTS

7 New or amended matter is indicated by vertical lines in the (identify which) margin. Amendment procedure is detailed in ▶MAP-01 Chapter 8.2◀.

E1234( ) Page (x)

Figure 7 Example of an aircraft Topic 5U1 introduction page (verso)

AP Code-5U1

OPERATIONAL READINESS SERVICING
CONVENTIONAL WEAPONS ROLE
AIRCRAFT NAME

SPECIAL INSTRUCTIONS

SERVICING AND AIRCRAFT ARMED STATES

1 The NCO IC Servicing is to make sure that the aircraft is set to the initially armed state before starting any servicing activity having greater than an 8 hour periodicity
(Including replenishments).

2 All aircraft servicing is prohibited during weapon loading/off loading.

WARNINGS, CAUTIONS AND MAINTENANCE INFORMATION

3 The NCO IC Servicing is to make sure that all personnel needed to service, or having reason to be near, the aircraft are fully conversant with any Warnings, Cautions and Maintenance Information contained in this Topic 5U1 and the Hazard and Maintenance Information (Topic 5A2).

4 The NCO IC Servicing is to brief the team on specific actions required commensurate with the dispersal site. To make sure that minimum movement in front of armed aircraft, the NCO IC Servicing may exchange the duties of Man A and Man B, in Phase 2 of this schedule, to suit HAS layouts which may vary dependent on location.

CONTROL OF ACCESS TO ARMED AIRCRAFT

5 When a loaded aircraft has been accepted by the aircrew, access to the aircraft is to be controlled by the aircraft captain.

6 Entry to the crew compartment is forbidden to all other personnel except for servicing duties when responsibility for access may be delegated to the NCO IC Servicing.

AIRCRAFT/EQUIPMENT EARTHING

7 The NCO IC Servicing is to make sure that the aircraft and associated equipment is correctly earthed dependent upon type of power source in use when weapons are on or near the aircraft.

E1234( ) Page (xi)

Figure 8 Example of an aircraft Topic 5U1 special instructions page (recto)

AP Code-5U1

HAZARDOUS INCIDENTS

8 If a loaded aircraft is involved in a hazardous incident, OC Fwd and the Senior Engineering Officer are to be informed immediately.

BATTERY MASTER SWITCH AND ARMAMENT SWITCHES

9 The aircraft captain is to make sure that the battery master switch and all armament switches are set to OFF, SAFE or LOCKED as appropriate before Phase 2 Servicing starts.

AIRCRAFT RECOVERY TO INITIALLY ARMED STATE DURING PEACETIME QRA DUTIES

10 The NCO IC Servicing is to make sure that the aircraft engines are shut down and the aircraft is put in the initially armed state prior to winchback into HAS.

REPORTING

11 Report to the NCO IC Servicing before entering the aircraft or before starting any servicing.

MAINTENANCE AND ARMED AIRCRAFT

12 If maintenance that is not specified in this Topic 5U1 is necessary then all weapons are to be off-loaded.

13 If operationally essential, maintenance may be done in accordance with ▶MAP-01 Chapter 14.7◀ and AP Code-2(N/A/R)1 leaflet XXX if the aircraft is in the initially armed state.

E1234( ) Page (xii)

Figure 9 Example of an aircraft Topic 5U1 special instructions page (verso)

AP Code-5U1

OPERATIONAL READINESS SERVICING
CONVENTIONAL WEAPONS ROLE
PREPARATION FOR STANDBY
AIRCRAFT NAME

Phase 1

LIST OF SECTIONS

Section 1 - Preparation of Aircraft

Section 2 - Loading of Weapons

Section 3 - Final Preparation for Standby

E1234( )

Figure 10 Example of an aircraft Topic 5U1 list of sections page

```
                                                          AP Code-5U1
                    OPERATIONAL READINESS SERVICING
                        CONVENTIONAL WEAPONS ROLE                Phase 1
                         PREPARATION FOR STANDBY                  Sect 1
                        PREPARATION OF AIRCRAFT
                             AIRCRAFT NAME

                           LIST OF CHAPTERS

                                                     Card     No. of
                                                     No.      Cards

 Chapter 1 - NCO IC Servicing ........................  1        1

 Chapter 2 - MAN A ...................................  1        1

 Chapter 3 - MAN B ...................................  1        1

 Chapter 4 - Avionics ................................  1        1

E1234( )
```

Figure 11 Example of an aircraft Topic 5U1 list of chapters page

NCO IC — AP Code-5U1
SERVICING — OPERATIONAL READINESS SERVICING — Phase 1 Sect 1
Card 1 — PREPARATION OF AIRCRAFT — Chap 1
AIRCRAFT NAME

ITEM NO.	ITEM	POWER	OPERATION	FREQUENCY
1.	Lifed components) and scheduled and) out-of-phase) Maintenance.)	N/A	Make sure that they are valid for the period of standby.	
2.	F700, F703 and 704.)			
3.	Aircraft.	OFF	(i) Make sure that it is in correct role. (ii) Make sure that it is in designated loading area. iii) Make sure that it is chocked. (iv) Make sure that it is earthed.	
4.	Aircraft ladder.	N/A	Make sure that it is positioned at aircraft.	
5.	Fire extinguishing equipment.	N/A	Make sure that it is serviceable and positioned at aircraft.	
6.	Nosewheels.	OFF	Make sure that they are central.	
7.	Dehumidification equipment.	OFF	Detail removal from aircraft (As required).	
8.	External electrical power supply.	OFF	(i) Detail connection to aircraft. (ii) Detail set to ON. Detail load to operational requirement.	
9.	1500/2250 Ltr external fuel tanks.	ON		

E1234( ) — Continued

Figure 12 Example 1 of an aircraft Topic 5U1 work card

NCO IC
SERVICING
Card 2

OPERATIONAL READINESS SERVICING
RECOVERY AFTER SORTIE/DISPERSAL
AIRCRAFT NAME

AP Code-5U1
Phase 2 Sect 3
Chap 1

ITEM NO.	ITEM	POWER	OPERATION	FREQUENCY
12.	External electrical power supply.	OFF	(i) Detail connection to aircraft. (ii) Detail set to ON.	
13.	Canopy.	N/A	Make sure that it is open.	
14.	Aircraft ladder.	N/A	Make sure that it is positioned at aircraft.	
15.	F700/F707.	N/A	Note recorded faults.	
16.	Aircraft.	ON	Detail Turn Round Servicing (Topic 5B1).	
17.	Fuel system.	ON	Detail refuel to operational requirements.	
18.	External electrical power supply.	OFF	Detail set to OFF.	
19.	Aircraft servicing.	N/A	Make sure that it is completed before starting Phase 1, Sect 2 (LOADING OF WEAPONS).	
20.	Weapons.	OFF	Detail loading to operational requirements (Phase 1, Sect 2).	
21.	Aircraft	OFF	Detail FINAL PREPARATION FOR STANDBY.	

E1234( )

Figure 13 Example 2 of an aircraft Topic 5U1 work card

CHAPTER 18-2

TOPIC 5U2 OPERATIONAL READINESS SERVICING SCHEDULE - SPECIAL WEAPONS ROLE

CONTENTS

Para

1 Introduction

INTRODUCTION

1 Topic 5U2 Operational Readiness Servicing Schedules (ORSS) for aircraft in the special weapons role included weapon loading/off-loading procedures which were subject to special approval and produced in accordance with JSP 372, Approvals Procedures for Publications Associated with Nuclear Weapons. However, the requirement for such procedures does not presently exist and the Topic 5U2 has been withdrawn from use.

CHAPTER 18-3

TOPIC 5U3 OPERATIONAL READINESS SERVICING SCHEDULE - UNARMED AIRCRAFT

CONTENTS

Para

1 Introduction

INTRODUCTION

1 The aircraft Topic 5U3 contains the preventive maintenance activities necessary to maintain an aircraft in a state of continuous operational readiness for up to 30 days.

FORMAT AND PRESENTATION

2 The format and presentation of a Topic 5U3 is the same as for a Topic 5U1 which is described in Chapter 18-1. However, because the aircraft is unarmed, the following exceptions apply:

2.1 There is no requirement to detail the loading of weapons during the Preparation for Standby detailed in Phase 1; the Final Preparation for Standby of Section 3 is therefore detailed as Section 2.

2.2 There is no requirement to detail the unloading of weapons during the Release from Standby detailed in Phase 3, which consists of only one section that details the requirement for an aircraft Flight Servicing.

CHAPTER 19-0

AIRCRAFT TOPIC 5V
SIGNIFICANT ITEMS: IDENTIFICATION, SAMPLING & REPORTING - GENERAL

CONTENTS

Para

1 Introduction
5 Compilation

Table Page

1 Sub-chapters related to the sections of a Topic 5V 1

Figure Page

1 Example DAP Topic 5V case cover 4

INTRODUCTION

1 ►MRP RA5720 (Structural Integrity Management), RA5721 (System Integrity Management) and RA5722 (Propulsion Integrity Management)◄ prescribe various scheduled examination and sampling requirements within the Establishing-Sustaining-Validating-Recovering-Exploiting (ESVRE) methodology detailed in those chapters and their corresponding sub-chapters. Whilst each Project Team (PT) may promulgate its overarching structural, system and propulsion integrity strategy elsewhere, the Topic 5V is the recommended single publication for promulgating the resultant structural, system and propulsion scheduled examination and sampling requirements plus any identification information and associated reporting procedures required to achieve the aims of that strategy. The consolidated results from the application of these requirements to a representative sample of the fleet can be used to make an assessment of the integrity of the whole fleet. Additionally, these results can substantiate assumptions made during the design of the aircraft, validate Reliability Centred Maintenance (RCM) analysis, and can significantly assist the development of any life extension programme.

2 The original title for a Topic 5V was 'Structural Examination Requirements' as it only addressed an aircraft's structural integrity management requirements. However, the scope of the Topic 5V was subsequently extended to include non-structural items and the title was changed to 'Sampling Requirements and Procedures'. The development of structure, system and propulsion integrity management policy has resulted in the need to further restructure the format of the Topic 5V; consequently, the current title is now 'Significant Items: Identification, Sampling and Reporting'. Depending on individual PT requirements, it may not be necessary to produce a new edition of a Topic 5V just to comply with the latest format. However, PTs should endeavour to update their Topic 5V to comply with the standard detailed in this publication.

3 The scheduled examination and sampling requirements of an aircraft's significant items are now divided into ten sections, each of which is described in an associated sub-chapter of this publication as shown in Table 1.

4 Each PT must aim to satisfy the structural sampling target stipulated in ►MRP RA5720◄. In addition to scheduled examinations, a properly managed sampling programme helps to mitigate the unquantified risk of critical structural failure from unanticipated sources. Therefore, each PT should maintain a list of all structural items requiring scheduled examination and/or sampling, which as a minimum should include all of an aircraft's Structurally Significant Items (SSIs), although other items may also be included due to the consequences that would occur in the event of their failure.

TABLE 1 SUB-CHAPTERS RELATED TO THE SECTIONS OF A TOPIC 5V

Sub-chapter	Topic 5V Section
Chap 19-1	Preliminary pages
Chap 19-2	Section 1. Structure - General Information
Chap 19-3	Section 2. Structure - Scheduled Examination and Sampling Requirements
Chap 19-4	Section 3. Structure Sampling - Planned Sampling Programme
Chap 19-5	Section 4. Structure Sampling - Opportunity Sampling
Chap 19-6	Section 5. Structure Sampling - Teardown Sampling
Chap 19-7	Section 6. Structure Sampling - Structure Sampling Procedures
Chap 19-8	Sections 7 to 10. Scheduled Examination and Sampling of Functionally Significant Items

COMPILATION

5 Once a PT has identified all of the items to be included in the Topic 5V, the specific requirements should be detailed in the relevant sections of the publication. If all of the identified items have only scheduled examination tasks as detailed in the Master Maintenance List (MML), then it may be sufficient just to populate Section 2 for the structural items and Sections 7 to 10 for the system items. However, during Reliability Centred Maintenance (RCM) analysis, some structural items may have been classified as being not-at-risk to accidental damage, environmental degradation or fatigue damage. Therefore, instead of requiring scheduled examination, they may only need sampling on either a proportion of the fleet, or a reduced frequency of sampling, in order to validate those RCM decisions. Should any sampling requirements for a structural item fall outside of the Scheduled Maintenance Programme, they should first be considered for inclusion in the Planned Sampling Programme in Section 3. However, if this is not suitable, then they should be considered for opportunity sampling as detailed in Section 4. Similarly, those structural items not even suitable for opportunity sampling will need to be subjected to teardown sampling as detailed in Section 5. Any dispensation to deviate from the policy stipulated in ►MRP RA5720◄ is to be sought from the policy stakeholders detailed in ►RA5720◄. For example, lack of access to an SSI may dictate that it is only suited to teardown sampling requiring the teardown of a life-expired or Cat 5 airframe. It may not be possible to examine some items to a satisfactory extent; therefore such items may be subject to any combination of scheduled examinations and supplementary planned, opportunity or teardown sampling. Further guidance for the promulgation of system item sampling, including propulsion, is in Chapter 19-8.

6 The Topic 5V can be produced either as a hard-copy publication or as a Digital Air Publication (DAP), with the latter being the preferred choice for the following reasons:

6.1 The Topic 5V has the potential to become a very large document, resulting in expensive printing costs and storage problems.

6.2 An important feature of the Topic 5V is the identification of the items listed within it. If identification figures are required, these are best facilitated by using coloured figures and photographs for each individual item, which can be prohibitively expensive for hard-copy publications.

6.3 A DAP can be incorporated into an existing or planned suite of Interactive Electronic Technical Publications (IETP). This will also enable hyper-linking within the Topic 5V and possibly also to referenced parts of other IETP publications.

6.4 It is easier to embed procedures and other information from outside of Service sources into a DAP.

7 Topics 5V are to be produced in A4 landscape format. An example of a DAP case cover is shown in Figure 1. The rear cover of the case should contain instructions on how the content of the DAP may be accessed, whilst the spine and front cover details are to be in accordance with Chapter 2-0.

HOW TO USE

1 These instructions are applicable to PC users only.

2 The DAPs on this disc contain links for navigating around the document with all links displayed in blue. The DAPs can also be navigated from bookmarks shown on the Bookmarks tab in the Navigation Pane.

3 The title page of each DAP contains a link from the sub-title to the publication's List of Contents (LOC). Links to return the reader to the title page or, to navigate throughout the DAP are available from the LOC.

4 The DAPs are printable but when printed, the hardcopy will become 'UNCONTROLLED COPY WHEN PRINTED'. Local management procedures must be applied to control the issue and use of any printed hardcopy.

5 Unless otherwise instructed, the previous version of this DAP is to be destroyed upon receipt of this superseding version.

DAP CODE-5V

Version 1.0 Dated: Month Year

DAP CODE-5V
Version: 1.0 Dated: Month Year

Ministry of Defence

AIRCRAFT NAME

SIGNIFICANT ITEMS IDENTIFICATION, SAMPLING AND REPORTING

Sponsored for use in the
UK Military Air Environment
by
XXXX PTL

Publication Organization:
XXXXXXXX

Service users should send their comments through
the channel prescribed for the purpose in:

►MAP-01 Chapter 8◄

Figure 1 Example DAP Topic 5V case cover

CHAPTER 19-1

AIRCRAFT TOPIC 5V
SIGNIFICANT ITEMS: IDENTIFICATION, SAMPLING & REPORTING- PRELIMINARY PAGES

CONTENTS

Para

1 Introduction
2 Details of Topic 5V preliminary pages
3 Front cover
4 Amendment record
5 Record of Advance Information Leaflets (AIL) and Service Amendment Leaflets (SAL)
6 Contents
7 Introduction
8 Health and safety at work

Figures Page

1 Example of a DAP Topic 5V list of contents 3
2 Example of a DAP Topic 5V introduction (first page) 4
3 Example of a DAP Topic 5V introduction (second page) 5

INTRODUCTION

1 As explained in Chapter 2-0, the preliminary pages of a maintenance schedules publication constitute that material which precedes the main contents of the publication. The purpose of this chapter is to provide a more detailed explanation of the preliminary pages that are specific to an aircraft Topic 5V.

DETAILS OF TOPIC 5V PRELIMINARY PAGES

2 The following paragraphs provide details of the Topic 5V preliminary pages in the order that they are presented in the publication.

Front cover

3 The front cover forms the title page of the Topic 5V as explained in Chapter 2-0. Examples of generic front covers are presented in Chapter 2-0, Figures 1 to 3.

Amendment record

4 The Amendment Record is a common preliminary page as described in Chapter 2-0. Examples of A4 size Amendment Records are presented in Chapter 2-0, Figures 4 to 7.

Record of Advance Information Leaflets (AIL) and Service Amendment Leaflets (SAL)

5 The Record of AILs and SALs is a common preliminary page as described in Chapter 2-0. Examples of A4 size Records of AILs and SALs are shown in Chapter 2-0, Figures 8 to 11.

Contents

6 An example of a Topic 5V Contents page is shown in Figure 1.

Introduction

7 The introduction explains the format and use of the Topic 5V. An example of a Topic 5V Introduction is shown in Figures 2 and 3.

Health and Safety at Work

8 This page contains a generic statement regarding Health and Safety at Work. An example of the generic Health and Safety at Work statement is shown in Chapter 11-0, Figure 2.

9

SIGNIFICANT ITEMS: IDENTIFICATION, SAMPLING AND REPORTING
AIRCRAFT NAME

DAP Code-5V

CONTENTS

Preliminary Material — Page

Title page ..... (i)
Amendment record ..... (ii) and (iii)
Record of Advance Information Leaflet (AIL) signals ..... (iv) and (v)
Contents (This page) ..... (vi)
Introduction ..... (vii) and (viii)
Health and safety at work ..... (ix)

Sections

1 Structure - General Information

2 Structure - Scheduled Examination and Sampling Requirements

3 Structure Sampling - Planned Sampling Programme

4 Structure Sampling - Opportunity Sampling

5 Structure Sampling - Teardown Sampling

6 Structure Sampling - Structure Sampling Procedures

7 Avionic and Electrical Systems - Scheduled Examination and Sampling Requirements

8 Propulsion Systems - Scheduled Examination and Sampling Requirements

9 Mechanical Systems - Scheduled Examination and Sampling Requirements

10 Weapon Systems - Scheduled Examination and Sampling Requirements

Page (vi)

Figure 1 Example of a DAP Topic 5V contents page

1

SIGNIFICANT ITEMS: IDENTIFICATION, SAMPLING AND REPORTING
AIRCRAFT NAME

DAP Code-5V

INTRODUCTION

INTRODUCTION

1 Policy in the ▶MRP RA5720 (Structural Integrity Management), RA5721 (System Integrity Management) and RA5722 (Propulsion Integrity Management)◀ requires certain significant items to be identified, listed, and subsequently examined or sampled. Consequently, this Topic 5V has been prepared to list those significant items, and whether they require scheduled examinations and/or sampling. Further information is promulgated to aid their identification and to detail reporting procedures. The list includes the mandatory Structurally Significant Items (SSI), plus any system or propulsion significant items. Primarily, these items are listed due to their significant 'consequence of failure' rather than the likelihood of failure. Each item's susceptibility to faults and/or fault case history will then determine the type and frequency of the required scheduled examination and/or sampling tasking. Therefore, it is imperative that the full extent of the prescribed tasking is done rather than just concentrating on the known fault areas of each item. The consolidated reported results from the application of these scheduled examination and/or sampling tasks to a representative sample of the fleet can be used to make an assessment of the integrity of the whole fleet.

USING THE TOPIC 5V

2 Sections 1 to 6 below detail the structure examination and/or sampling requirements:

2.1 Section 1, Structure - General Information. Section 1 contains information on the types of structural faults together with examination methods and reporting procedures.

2.2 Section 2, Structure - Scheduled Examination and Sampling Requirements. Section 2 contains all of an aircraft's structural items requiring scheduled examination and/or sampling. Chapter 1 contains the master list of SSIs, which may be supplemented with figures to aid the identification of each SSI. Structure other than SSIs, which the Project Team (PT) wishes to sample, is included in Chapter 2. If an aircraft has a Safety of Flight Structure (SoFS) list, it may be included at Chapter 3.

2.3 Section 3, Structure Sampling - Planned Sampling Programme. Some items listed in Section 2 may require planned sampling, consequently Section 3 details any planned sampling programme established by the PT for those items.

2.4 Section 4, Structure Sampling - Opportunity Sampling. Some items listed in Section 2 may require opportunity sampling; consequently Section 4 details any opportunity sampling requirements established by the PT for those items.

2.5 Section 5, Structure Sampling - Teardown Sampling. Some items listed in Section 2 may require teardown sampling; consequently Section 5 details any teardown sampling requirements established by the PT for those items. Such sampling is only to be done at the direction of the PT when suitable aircraft or assemblies are available.

2.6 Section 6, Structure Sampling - Structure Sampling Procedures. Section 6 contains Structure Sampling Procedures for any structure sampling that lacks suitable supporting information in the Aircraft Maintenance Manual .

3 Sections 7 to 10 may contain the scheduled examination and/or sampling requirements for certain Functionally Significant Items (FSI) relating to avionic and electrical, propulsion, mechanical and weapon systems specified by the relevant PT as follows:

3.1 Section 7, Avionic and Electrical Systems Scheduled Examination and Sampling Requirements. Section 7 contains information on the scheduled examination and sampling requirements of specified FSIs related to avionic and electrical systems.

Page (vii)

Figure 2 Example of a DAP Topic 5V introduction (first page)

1

SIGNIFICANT ITEMS: IDENTIFICATION, SAMPLING AND REPORTING
AIRCRAFT NAME

DAP Code-5V

CONTENTS

3 (Contd)

3.2 Section 8, Propulsion Systems Scheduled Examination and Sampling Requirements. Section 8 contains information on the scheduled examination and sampling requirements of specified FSIs related to propulsion systems.

3.3 Section 9, Mechanical Systems Scheduled Examination and Sampling Requirements. Section 9 contains information on the scheduled examination and sampling requirements of specified FSIs related to mechanical systems.

3.4 Section 10, Weapon Systems Scheduled Examination and Sampling Requirements. Section 10 contains information on the scheduled examination and sampling requirements of specified FSIs related to weapon systems.

AMENDMENT PROCEDURES

4 New or amended matter will be indicated by a vertical line in the left hand margin. Amendment procedure is detailed in ▶MAP-01 Chapter 8.2◀.

Page (viii)

Figure 3 Example of a DAP Topic 5V introduction (second page)

CHAPTER 19-2

AIRCRAFT TOPIC 5V
SECTION 1 - STRUCTURE - GENERAL INFORMATION

CONTENTS

Para

1 Introduction
2 Details of Topic 5V section 1
3 Chapter 1
4 Chapter 2
5 Chapter 3
6 Chapter 4
7 Chapter 5
8 Chapter 6

Figure Page

1 Example of a DAP Topic 5V section 1 list of chapters 3
2 Example of a DAP Topic 5V section 1 chapter 1 (page 1) 4
3 Example of a DAP Topic 5V section 1 chapter 1 (page 2) 5
4 Example of a DAP Topic 5V section 1 chapter 2 6
5 Example of a DAP Topic 5V section 1 chapter 3 7
6 Example of a DAP Topic 5V section 1 chapter 4 8
7 Example of a DAP Topic 5V section 1 chapter 5 (page 1) 9
8 Example of a DAP Topic 5V section 1 chapter 5 (page 2) 10
9 Example of a DAP Topic 5V section 1 chapter 6 (sheet 1) 11
10 Example of a DAP Topic 5V section 1 chapter 6 (sheet 2) 12
11 Example of a DAP Topic 5V section 1 chapter 6 (sheet 3) 13

INTRODUCTION

1 Section 1 contains general information for structure, detailing the types of structural faults, examination methods and reporting procedures. This information is detailed in six chapters.

DETAILS OF TOPIC 5V SECTION 1

2 The following paragraphs provide details of the Topic 5V Section 1 chapters in the order that they are presented in the publication. An example List of Chapters is shown in Figure 1.

Chapter 1

3 Chapter 1 details the types of structural faults and methods of examination. Examples of Chapter 1 pages are shown in Figures 2 and 3.

Chapter 2

4 Chapter 2 contains information regarding reporting the results of scheduled examination and sampling of the structure items listed in the Topic 5V. An example of a Chapter 2 page is shown in Figure 4.

Chapter 3

5 Chapter 3 details the instructions for use for the SSI Scheduled Examination and Sampling Record. An example of a Chapter 2 page is shown in Figure 5.

Chapter 4

6 Chapter 4 details the SSI Scheduled Examination and Sampling Record. An example of a Chapter 4 page is shown in Figure 6.

Chapter 5

7 Chapter 5 details the instructions for use for the Structure Scheduled Examination and Sampling Report. Examples of Chapter 5 pages are shown in Figures 7 and 8.

Chapter 6

8 Chapter 6 details the Structure Scheduled Examination and Sampling Report that is raised whenever a structural fault is discovered during scheduled examination or sampling. Examples of Chapter 6 sheets are shown in Figures 9 to 11.

SIGNIFICANT ITEMS: IDENTIFICATION, SAMPLING AND REPORTING
STRUCTURE - GENERAL INFORMATION
AIRCRAFT NAME

DAP Code-5V
Sect 1

LIST OF CHAPTERS

	Page No.	No. of Pages
Chapter 1 - Types of Structural Faults and Methods of Examination	1 - 2	2
Chapter 2 - Structure Scheduled Examination and Sampling Reporting	1	1
Chapter 3 - SSI Scheduled Examination and Sampling Recording Procedure	1	1
Chapter 4 - SSI Scheduled Examination and Sampling Record	1	1
Chapter 5 - Structure Scheduled Examination and Sampling Reporting Procedure	1 - 2	2
Chapter 6 - Structure Scheduled Examination and Sampling Report	1 - 3	3

Figure 1 Example of a DAP Topic 5V section 1 list of chapters

SIGNIFICANT ITEMS: IDENTIFICATION, SAMPLING AND REPORTING
STRUCTURE - GENERAL INFORMATION
AIRCRAFT NAME

DAP Code-5V
Sect 1
Chap 1

TYPES OF STRUCTURAL FAULTS AND METHODS OF EXAMINATION

THE NATURE OF STRUCTURAL FAULTS

1 Before detailing the methods of structure examination utilised during scheduled examinations and/or sampling, it is important to describe the type and nature of the faults likely to be found.

Environmental Degradation (ED)

2 Tri-Service Policy on Environmental Degradation (ED), prevention and control is contained in ▶MRP RA5720◀. ED can often result in corrosion, which can occur in a variety of forms depending both on the nature of the structure concerned and the environment to which it is subjected. A full description of the various types of corrosion is contained in AP119A-0201-1 (Aircraft Corrosion Handbook), which should be studied before carrying out structural sampling examinations. Apart from readily apparent faults of the types mentioned in Paragraphs 3 to 6, the presence of less obvious deterioration may be deduced from its secondary effects. Surface corrosion may produce lifting and blistering of the surface treatment. The products of crevice corrosion may cause bulging of the skin, cracks, failed rivets and the opening of joint edges, eventually with an exudation of corrosion products. Exfoliation corrosion within skin panels or planks will cause slight bulging on the surface of apparently sound material. Such signs may indicate an advanced state of concealed corrosion, and further investigation, by removal of protective finish or opening up the structure, is essential.

Cracking

3 Cracking can occur in all parts of the structure and may be caused by general or local overstressing or as a result of stress corrosion or fatigue. Severe cracks will be obvious to the naked eye but in some critical areas early detection is to be achieved by optical aids or specialized NDT techniques.

Deterioration of Finish

4 Deterioration of surface finish is not a structural fault in itself, but it may be either the cause or the effect of corrosion or other faults. Early detection and rectification of all deterioration is most important.

Distortion

5 Distortion of structure may be a sign of actual or incipient failure, or it may be an outward indication of a build up of corrosion products at a joint or interface. In both cases stringent examination will be necessary to detect any potential problem in the early stages.

Loose and Missing Rivets

6 The flexing of the structure of an aircraft during flight will produce movement, to some degree, at riveted joints, and any slight imperfections during manufacture will become evident. The detection and replacement of loose and missing rivets may well prevent a more serious failure later.

Page 1

Figure 2 Example of a DAP Topic 5V section 1 chapter 1 (Page 1)

SIGNIFICANT ITEMS: IDENTIFICATION, SAMPLING AND REPORTING
STRUCTURE - GENERAL INFORMATION
AIRCRAFT NAME

DAP Code-5V
Sect 1
Chap 1

TYPES OF STRUCTURAL FAULTS AND METHODS OF EXAMINATION

General Faults on Composite Material (CM)

7 Tri-Service Policy on Composite Materials (CM) is contained in ▶MAP-01 Chapter 5.1.1◀. Faults on CM can be difficult to detect. For example loose or broken fibres may naturally fall back into place giving the initial appearance that no damage exists. Any indication or suspicion of damage to CM, eg, delamination due to impact damage, may require further inspection using NDT techniques to determine the full extent of any damage. When fault indications are detected, consideration should be given to the probable cause, eg loose fibres may indicate an impact site, whereas crazing may indicate that the structure has been subject to excessive heat and appropriate remedial action should be taken.

METHODS OF EXAMINATION

8 There are various types of examination as detailed below. All examinations of Structurally Significant Items (SSIs) are to be done by authorized tradesmen (▶MAP-01◀). Due to the build-up of the structure or the proximity of adjacent items it may not be possible to do a complete examination, consequently maintenance operations may specify 'examine as far as possible' or the removal of certain items required to gain access. Whilst the specialized NDT techniques described below make it possible to detect and monitor specific faults in known or suspected regions of weakness, they do not provide the facility to search for faults over a wide area. Consequently, these are often supplemented by more general examinations.

Visual Examination

9 Visual examination is the most common method of examination used by tradesmen engaged in scheduled examination and/or sampling. Due to the great variety of faults that may be present, visual examinations must be done with meticulous attention to detail.

Aided Visual Examination

10 Visual examinations may need to be aided by optical equipment, in which case the use of optical aids will be called upon in the schedule or other referenced documents. Due to the size of expected faults a magnifying glass may be specified. Where the structure to be examined is enclosed or inaccessible, the use of other optical aids may be specified. The main optical aid to be used is the Cold Light Endoprobe, which has been scaled for all units required to do structural examinations and/or sampling.

NDT Techniques

11 Special NDT techniques are developed where it is not possible to visually monitor deterioration in regions known, or suspected, to be prone to specific faults. These techniques are tailored to the item and the expected fault, making use of dye-penetrant, radiographic, ultrasonic, eddy current and magnetic particle methods. The individual techniques are detailed by number in the schedule or other referenced documents and are detailed in the aircraft Topic 5G. The Tri-Service policy for NDT is detailed in ▶MAP-01 Chapter 11.5◀. The techniques are required to be done by trained operators whose services are available through established Regional NDT Teams as described in ▶MAP-01 Chapter 11.5.1◀.

Page 2

Figure 3 Example of a DAP Topic 5V section 1 chapter 1 (Page 2)

SIGNIFICANT ITEMS: IDENTIFICATION, SAMPLING AND REPORTING
STRUCTURE - GENERAL INFORMATION
AIRCRAFT NAME

DAP Code-5V
Sect 1
Chap 2

STRUCTURE SCHEDULED EXAMINATION AND SAMPLING REPORTING

THE NEED FOR DESCRIPTIVE REPORTING

1 The results of structure scheduled examinations and/or sampling are required to build up a representative picture of the structural condition of the whole fleet. Each examination is to be thorough and the results reported. The nature, extent and exact location of any faults or deterioration found are to be described accurately. For SSIs, it is also important to record examinations when the aircraft structure is free of deterioration and faults to enable accurate trend analysis. Any corrective maintenance and associated man-hour costs are also to be recorded.

DOCUMENTATION

2 In addition to the normal recording required for aircraft maintenance, and to any fault reporting action required by ▶MAP-01, Chapter 7.5◀, a Unit or contractor doing scheduled examination or sampling is to complete a SSI Scheduled Examination and Sampling Record in accordance with Sect 1 Chap 3, for all SSIs that are to be examined. A copy of the record is to be sent to the relevant Project Team (PT) or Integrated Operational Support (IOS) solution. The original copy of the completed record is to be retained with the Maintenance Work Order (MWO).

3 For significant items listed in Section 2, Chapters 1 and 2 that are found to have apparent faults, a full Structure Scheduled Examination and Sampling Report is to be raised, in accordance with Sect 1 Chap 5. This is to be forwarded to the relevant PT or IOS solution with any SSI Scheduled Examination and Sampling Record. The original copy of the completed report is to be retained with the MWO.

4 In order that the Through Life Management and Continuing Airworthiness requirements of the aircraft are met, the aircraft PT or IOS solution, is to analyse the records and reports and do the following activities:

a. Assess the implications of any fault and recovery action for the individual aircraft.

b. Through trend analysis, determine whether fleet-wide engineering action is required.

c. Provide structure scheduled examination and sampling information, including trends, no-defect-found and defect details for stakeholder review at the aircraft's Structural Integrity Working Group or equivalent meeting.

d. Make sure that the data from all records and reports are utilized during any maintenance schedule review for the aircraft.

Page 1

Figure 4 Example of a DAP Topic 5V section 1 chapter 2

SIGNIFICANT ITEMS: IDENTIFICATION, SAMPLING AND REPORTING
STRUCTURE - GENERAL INFORMATION
AIRCRAFT NAME

DAP Code-5V
Sect 1
Chap 3

SSI SCHEDULED EXAMINATION AND SAMPLING RECORDING PROCEDURE

SSI SCHEDULED EXAMINATION AND SAMPLING RECORD INSTRUCTIONS FOR USE

1 In addition to the Maintenance Work Order (MWO) that details a scheduled examination or sampling activity for one or more SSIs, an SSI Scheduled Examination and Sampling Record is to be raised. A separate record is required for each of the following activities:

a. Scheduled examination (Only the highest maintenance type needs to be identified).

b. Planned sampling.

c. Opportunity sampling.

d. Teardown sampling.

e. Other reason (eg Out of Phase code).

For each of the above activities, as many sheets as required are to be raised to cover the number of SSIs included in that activity. In the case of scheduled maintenance this should, wherever possible, be done by the organization issuing the maintenance package, detailing the included SSIs. In other instances the task supervisor is to raise the record and detail the included SSIs. The form may be compiled electronically on screen using the tab key or mouse to navigate between fields, or printed and completed by hand. A 'print form' button is included to provide hardcopy.

Part A Compilation

2 Part A is to be completed as follows:

a. Complete the aircraft and Unit details and enter the relevant MWO SNOW number.

b. Indicate the activity that is calling up the scheduled examination or sampling of all the SSIs on that sheet by deleting inapplicable items. If the activity selected is 'other' then it is to be specified. Note: Items from different activities should NOT be listed on the same sheet.

Part B Compilation

3 Part B is to be completed as follows:

a. Once the scheduled examination or sampling of each SSI is complete, indicate against its SSI number with a cross in the appropriate column if it was 'S' (Serviceable) or 'US' (Unserviceable). Additionally, for any item found to have a fault, the SNOW number of the remedial action MWO is to be entered against it.

b. The examining SNCO/Supervisor is to make a statement that Parts A and B of this record have been satisfactorily and accurately completed, and that copies of the Structure Scheduled Examination and Sampling Report for all items identified as having faults have been forwarded, together with the SSI Scheduled Examination and Sampling Record to the PT or IOS solution.

Page 1

Figure 5 Example of a DAP Topic 5V section 1 chapter 3

SIGNIFICANT ITEMS: IDENTIFICATION, SAMPLING AND REPORTING
STRUCTURE - GENERAL INFORMATION
AIRCRAFT NAME

DAP Code-5V
Sect 1
Chap 4

SSI SCHEDULED EXAMINATION AND SAMPLING RECORDING PROCEDURE

Part A

Parent Unit _____ Aircraft Type _____ Aircraft Serial No. _____ Airframe Hours _____ Date _____

SNOW															

Scheduled Examination* (Specify maintenance) _____ Sampling: Planned/Opportunity/Teardown Other* (Specify) _____ *Delete as applicable

Part B

SSI No.	'S'	'U/S'	SNOW			

SSI No.	'S'	'U/S'	SNOW			

SSI No.	'S'	'U/S'	SNOW			

Examining SNCO/Supervisor Parts A and B of this record have been satisfactorily and accurately completed. In addition copies of the Structure Scheduled Examination and Sampling Report for all SSIs identified as having faults have been forwarded together with this report to the relevant PT or IOS solution.

Signature _____ Name _____ Rank _____ Date _____ Ext _____ _____

Figure 6 Example of a DAP Topic 5V section 1 chapter 4

SIGNIFICANT ITEMS: IDENTIFICATION, SAMPLING AND REPORTING
STRUCTURE - GENERAL INFORMATION
AIRCRAFT NAME

DAP Code-5V
Sect 1
Chap 5

STRUCTURAL SCHEDULED EXAMINATION AND SAMPLING REPORTING PROCEDURE

STRUCTURE SCHEDULED EXAMINATION AND SAMPLING REPORT INSTRUCTIONS FOR USE

1 A Structure Scheduled Examination and Sampling Report is to be raised whenever a significant item is found to have a fault. The form may be compiled electronically on screen, using the tab key or mouse to navigate between fields, or printed and completed by hand. A 'print form' button is included to provide hardcopy.

Part A Compilation

2 Part A is to be completed by the organisation undertaking the examination as follows:

Field 1. Completed on all occasions, detail the general information indicated leaving no blank fields, if an item is not applicable 'N/A' is to be entered.

Field 2. Completed on all occasions. Place an 'X' in the appropriate box to indicate the examination or inspection method used to detect the fault.

Field 3. Completed on all occasions. Place an 'X' in the appropriate box to indicate the material details.

Field 4. Completed as appropriate. Place an 'X' in the appropriate box(s) to indicate which type(s) of damage are present.

Field 5. Completed on all occasions. Place an 'X' in the appropriate box to indicate the general condition of the internal area containing the subject item. If the item is not in an internal area place an 'X' in the 'Not Applicable box'.

Part B Compilation

3 Part B is to be completed by the organisation undertaking the examination, as follows:

Field 6. Completed on all occasions. This field is to be used to give a detailed description of the type and extent of damage and any other relevant information. It should wherever possible be supported by the use of photographs or drawings indicating the damage. If there is insufficient space the continuation sheet at page 3 should be used. The number of continuation sheets, photographs/drawings or other attachments included is to be detailed. The following information should always be included in the narrative report if the relevant damage has been indicated in field 4:

a. Single crack or scratch - Detail exact location, direction and length.
b. Multiple cracks or scratches - Detail quantity, exact locations, directions and lengths.
c. Corrosion or corrosion of adjacent structure - Detail type of corrosion (AP119A-0201-1) and describe its appearance.
d. Loose or missing fasteners - Detail quantity and location(s).
e. External/internal surface finish deteriorated - Detail nature and appearance of deterioration and size of affected area.
f. Dents - Detail quantity, location, size and if possible depth.
g. Delamination, deformation, disbond, crazing, or loose/broken fibres - Detail location, size, shape of affected area and thickness of material.
h. Contamination - Detail contaminant if known.

Page 1

Figure 7 Example of a DAP Topic 5V section 1 chapter 5 (Page 1)

SIGNIFICANT ITEMS: IDENTIFICATION, SAMPLING AND REPORTING
STRUCTURE - GENERAL INFORMATION
AIRCRAFT NAME

DAP Code-5V
Sect 1
Chap 5

STRUCTURAL SCHEDULED EXAMINATION AND SAMPLING REPORTING PROCEDURE

Part B Compilation (Contd)

Field 6. (Contd) The Supervisor of the scheduled examination or sampling task is to make a statement that Fields 1 to 6 have been satisfactorily and accurately completed.

Field 7. Completed on all occasions. The appropriate Engineering Officer or NDT Specialist is to make any additional comments as required, sign and forward the report to the relevant PT or IOS solution.

\

Page 2

Figure 8 Example of a DAP Topic 5V section 1 chapter 5 (Page 2)

SSR
Sheet 1
(1 of 3)

SIGNIFICANT ITEMS: IDENTIFICATION, SAMPLING AND REPORTING
STRUCTURE - GENERAL INFORMATION
AIRCRAFT NAME

DAP Code-5V
Sect 1
Chap 6

STRUCTURAL SCHEDULED EXAMINATION AND SAMPLING REPORT

PART A

1. General Information:

Parent Unit _____ Aircraft Type _____ Aircraft Serial No. _____ Airframe Hours _____ Date _____

Item Description _____ SSI No. _____ Maintenance SNOW _____

Maintenance Type _____ Activity: Scheduled Examination/Sampling/Planned/Opportunity/Teardown* (Structural Sampling Procedure No.) _____

F760 Reference _____ Repair Scheme Request Signal Details _____ Rectification Man-hours _____

* Delete as applicable

2. Examination Method:

Visual ☐ Aided Visual ☐ NDT Technique ☐ Specify Technique Number:

3. Material Details:

Ferrous Metallic ☐ Non-ferrous Metallic ☐ Composite ☐

4. Type of Damage:

Corrosion ☐ Single Crack ☐ Composite ☐ Multiple Cracking ☐ Distortion ☐ Missing Fasteners ☐ Loose Fasteners ☐ Scratches ☐

Internal Surface Finish Deteriorated ☐ External Surface Finish Deteriorated ☐ Sealants Deteriorated ☐ Corrosion Preventive Compounds ☐

Dents ☐ Delamination ☐ Deformation ☐ Disbond ☐ Crazing ☐ Contamination ☐ Loose/Broken Fibres ☐

Corrosion of Adjacent Structure ☐ Other ☐ Specify:

5. General Internal Condition:

Dry ☐ Condensation Present ☐ Fluid or Dirt Contamination ☐ Trapped Water ☐ Not Applicable ☐

Figure 9 Example of a DAP Topic 5V section 1 chapter 6 (sheet 1)

SSR
Sheet 2
(2 of 3)

SIGNIFICANT ITEMS: IDENTIFICATION, SAMPLING AND REPORTING
STRUCTURE - GENERAL INFORMATION
AIRCRAFT NAME

DAP Code-5V
Sect 1
Chap 6

STRUCTURAL SCHEDULED EXAMINATION AND SAMPLING REPORT

PART B

6. Narrative Report:: (Use continuation sheet on page 3 if necessary). Continuation sheets Qty _____ Photo/drawings Qty _____ Other Attachments Qty _____

Fields 1 to 6 inclusive of this report have been satisfactorily and accurately completed.

Signature _____ Name _____ Rank _____ Date _____ Ext _____

7. Specialist Officer's/NDT Specialist Remarks:

Signature _____ Name _____ Rank _____ Date _____ Ext _____

Figure 10 Example of a DAP Topic 5V section 1 chapter 6 (sheet 2)

SSR
Sheet 3
(3 of 3)

SIGNIFICANT ITEMS: IDENTIFICATION, SAMPLING AND REPORTING
STRUCTURE - GENERAL INFORMATION
AIRCRAFT NAME

DAP Code-5V
Sect 1
Chap 6

STRUCTURAL SCHEDULED EXAMINATION AND SAMPLING REPORT

PART B

8. Narrative Report: continuation sheet::

Figure 11 Example of a DAP Topic 5V section 1 chapter 6 (sheet 3)

CHAPTER 19-3

AIRCRAFT TOPIC 5V
SECTION 2 - STRUCTURE - SCHEDULED EXAMINATION AND SAMPLING REQUIREMENTS

CONTENTS

Para

1 Introduction
2 Details of Topic 5V section 2
3 Chapter 1
7 Chapter 2
10 Chapter 3

Figure Page

1 Example of a DAP Topic 5V section 2 list of chapters 3
2 Example of a DAP Topic 5V master list of SSIs 4
3 Example 1 of a DAP Topic 5V SSI identification figures 5
4 Example 2 of a DAP Topic 5V SSI identification figures 6
5 Example 3 of a DAP Topic 5V SSI identification figures 7
6 Example 4 of a DAP Topic 5V SSI identification figures 8
7 Example of a typical DAP Topic 5V safety of flight structure list 9

INTRODUCTION

1 Section 2 details all of an aircraft's structural items requiring scheduled examination and/or sampling.

DETAILS OF TOPIC 5V SECTION 2

2 The following paragraphs provide details of the Topic 5V Section 2 chapters in the order that they are presented in the publication. An example List of Chapters is shown in Figure 1.

Chapter 1

3 Chapter 1 contains the master list of all the SSIs on the aircraft as required by ►MRP RA5720◄. All items on this list should also be listed in the Master Maintenance List (MML), where the details of their required maintenance tasks are promulgated. An example Master List of SSIs page is shown in Figure 2. Each SSI is identified by a unique reference number (starting with SSI 001), which is to be annotated in brackets at the end of each SSI's item description wherever it appears in the MML and associated Topic 5 publications. Thus, the tradesman can use the reference number in conjunction with the master list of SSIs to locate the relevant identification figures within this section of the Topic 5V. Additionally, the Master List of SSIs details whether the items have scheduled examination or sampling (either planned, opportunity or teardown) maintenance tasks. To make sure that all SSIs are satisfactorily examined, many of them may have a combination of scheduled examination and sampling tasks.

4 The Scheduled Examination column relates to the maintenance tasks that are either part of a scheduled maintenance package (eg Primary, Minor, Major, etc) or have a regular pre-determined frequency (eg 500 flying hours, 30 days, 600 landings etc). Those maintenance tasks that have a random frequency (eg every wing removal, engine removal etc) are listed in the Sampling column. The Scheduled Examination column is annotated with either "Yes" or "No" to indicate whether the SSI has scheduled examination tasks listed in the MML.

5 In the Sampling column, 'No' indicates the SSI has no sampling requirements, whilst 'Planned', 'Opportunity', 'Teardown' or a combination indicates whether each SSI has a sampling requirement, which will be further detailed in Sections 3 to 5 of the Topic 5V. Those maintenance tasks that have a random frequency (eg; every wing removal, engine removal, etc) are listed in the Opportunity Sampling section.

6 Chapter 1 also contains figures to aid the identification of the individual SSIs listed in the Master List of SSIs. SSIs can be difficult to identify from the brief description given in the MML, so the figures include

illustrations and further descriptive information to aid locating an SSI and identifying its extent. To reduce the size of a hard-copy Topic 5V, the figures may be used to identify multiple SSIs. For a DAP Topic 5V, each SSI will have its own set of figures. Initially a basic line drawing of the aircraft is used to identify the approximate location of the SSI, which is coloured 'cyan blue'. This illustration is supplemented by a text box giving brief descriptive details of the SSI. Additional figures comprising detailed line drawings of the SSI can be included, with the SSI again being coloured 'cyan blue'. These figures may also be used to show how the SSI will appear on the aircraft, as many SSIs are partially obscured by other items or are difficult to access. Photographs are particularly useful for this purpose, with the extent of the SSI being detailed with red dashed lines for visible structure and black, white or grey dashed lines (depending on contrast with background colour) for the hidden extent of the SSI. All figures have the SSI labelled with the SSI reference number in bold type. Further figures may be added as required. The numbering of figures in a hard-copy Topic 5V is in numerical order, whilst those in a DAP are numbered in relation to the SSI they are describing. For a DAP the figure number for the initial aircraft line drawing is the same as the SSI number. The further amplifying figures are then numbered with the SSI number plus a lower case letter in alphabetical order. Examples of typical figures are in Figures 3 to 6.

Chapter 2

7 In addition to SSIs, other structural items may require scheduled examination or sampling due to the unacceptable economic or operational consequences that would occur should they fail. Chapter 2 lists these items in a similar format to the Master List of SSIs in Chapter 1. However, these items will not have an SSI number, but it may be possible to make reference to them by stating the respective Schedule Identification Number (SIN) from where the item is detailed in the MML. If the SIN is utilised then the title of the relevant list column should reflect this; however, it must be considered that SIN numbers may change during maintenance reviews. The alternative is to use the item's Part Number.

8 If identification figures are required, then they should be to the same format as those in Chapter 1. Where identification figures are used, their figure numbers should appear on the list against their respective item.

9 Guidance should be given to PTs on the reporting action required for these items. For example, items listed in Chapter 2 may also be listed in the Mandatory Fault Reporting Instruction list. It is also possible to utilize the Structure Scheduled Examination and Sampling Report detailed in Sect 1, Chapters 5 and 6, of the Topic 5V.

Chapter 3

10 Previous structural integrity policy required the identification of Safety of Flight Structure (SoFS). It should be noted, however, that the term SoFS is no longer formally acknowledged, because the definition of an SSI, as promulgated in ►MAP-01◄, has since been revised to include those items previously identified as SoFS. Nonetheless, some legacy Topic 5V maintenance schedules still contain a Chapter 3 List of SoFS, which will remain until they are reviewed and incorporated into a consolidated list of SSIs within Chapter 1. Due to the extent and varying formats of the available information between aircraft types there is no prescribed format for a SoFS list, although a typical example is shown in Figure 7.

1

SIGNIFICANT ITEMS: IDENTIFICATION, SAMPLING AND REPORTING
STRUCTURE - SCHEDULED EXAMINATION AND SAMPLING REQUIREMENTS
AIRCRAFT NAME

DAP Code-5V
Sect 2

LIST OF CHAPTERS

	Page No.	No. of Pages
Chapter 1 - Master SSI list and SSI identification figures	1 - 197	197
Chapter 2 - Additional structure items requiring scheduled examination and/or sampling	1 - 2	2
Chapter 3 - Safety of flight structure list	1 - 2	2

Figure 1 Example of a DAP Topic 5V section 2 list of chapters

1

SIGNIFICANT ITEMS: IDENTIFICATION, SAMPLING AND REPORTING
STRUCTURE - SCHEDULED EXAMINATION AND SAMPLING REQUIREMENTS
AIRCRAFT NAME

DAP Code-5V
Sect 2
Chap 1

MASTER SSI LIST AND SSI IDENTIFICATION FIGURES

SSI No	Main Assembly	Item Description	Scheduled Examination	Sampling	Figure No
001	Fuselage	Canted crown former (STA 76 to 95, WL 21 to top of transmission mount)	Yes	No	
		(Location view)			1
		(Detail views)			1a
		(Example view)			1b
002		Forward pylon BL 18 beam (STA 76 to 120 WL 17 to top of transmission mount)	Yes	No	
		(Location view)			2
		(Detail views)			2a
		(Example view)			2b
003		Crown former (STA 120, including paratroop anchor line support at BL 8L WL 41)	Yes	Teardown	
		(Location view)			3
		(Detail views)			3a
		(Example view)			3b
		(Further example view)			3c
004		Side former (STA 120 cabin floor to crown former)	No	Opportunity	
		(Location view)			4
		(Detail view)			4a
		(Example views)			4b
005		Crown former (STA 482)	Yes	No	
		(Location view)			5
		(Detail views)			5a
		(Example view)			5b
		(Further example view)			5c
006		Crown former (STA 534)	No	Planned	
		(Location view)			6
		(Detail views)			6a
		(Example view)			6b
		(Further example view)			6c
		(Example view of splice to side formers)			6d

Page 1

Figure 2 Example of a DAP Topic 5V master list of SSIs

5

SIGNIFICANT ITEMS: IDENTIFICATION, SAMPLING AND REPORTING
STRUCTURE - SCHEDULED EXAMINATION AND SAMPLING REQUIREMENTS
CHINOOK ALL MKS

DAP 101C-0500-5V
Sect 2
Chap 1

MASTER SSI LIST AND SSI IDENTIFICATION FIGURES

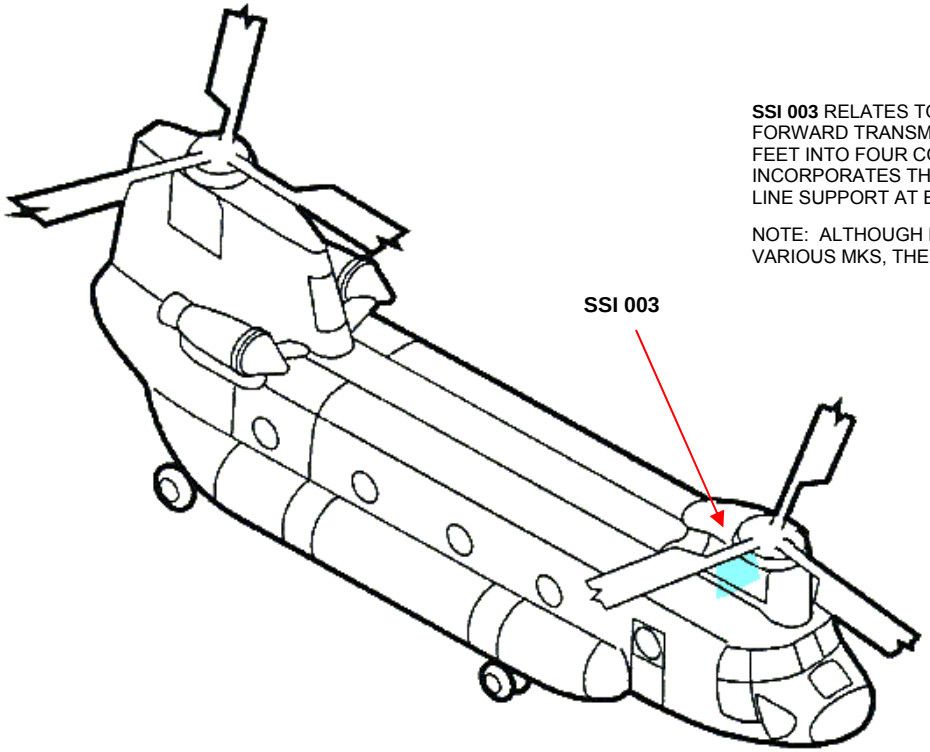

SSI 003 RELATES TO THE CROWNED FORMER AT STA 120. THE FORWARD TRANSMISSION IS ATTACHED VIA FOUR MOUNTING FEET INTO FOUR CORRESPONDING FITTINGS. THIS SSI INCORPORATES THE REAR FITTING AND A PARATROOP ANCHOR LINE SUPPORT AT BL 8L, WL41.

NOTE: ALTHOUGH DETAIL DIFFERENCES EXIST BETWEEN THE VARIOUS MKS, THE APPEARANCE IS SIMILAR FOR THEM ALL.

Fig 3 Crown former (STA 120, including paratroop anchor line support at BL 8L WL 41) (Location view)

Page 15

Figure 3 Example 1 of a DAP Topic 5V SSI identification figures

5

SIGNIFICANT ITEMS: IDENTIFICATION, SAMPLING AND REPORTING
STRUCTURE - SCHEDULED EXAMINATION AND SAMPLING REQUIREMENTS
CHINOOK ALL MKS

DAP 101C-0500-5V
Sect 2
Chap 1

MASTER SSI LIST AND SSI IDENTIFICATION FIGURES

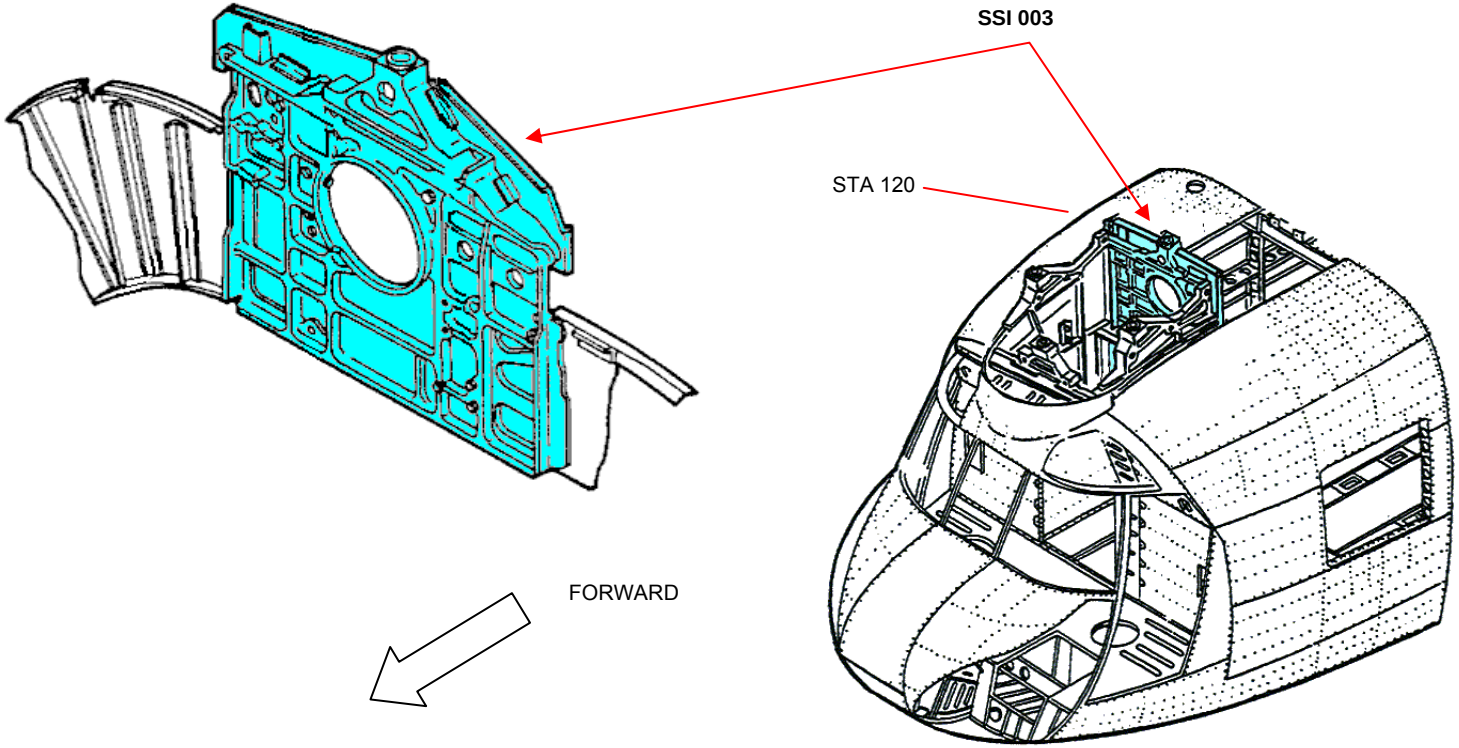

Fig 3a Crown former (STA 120, including paratroop anchor line support at BL 8L WL 41) (Detail views)

Page 16

Figure 4 Example 2 of a DAP Topic 5V SSI identification figures (Contd)

5

SIGNIFICANT ITEMS: IDENTIFICATION, SAMPLING AND REPORTING
STRUCTURE - SCHEDULED EXAMINATION AND SAMPLING REQUIREMENTS
CHINOOK ALL MKS

DAP 101C-0500-5V
Sect 2
Chap 1

MASTER SSI LIST AND SSI IDENTIFICATION FIGURES

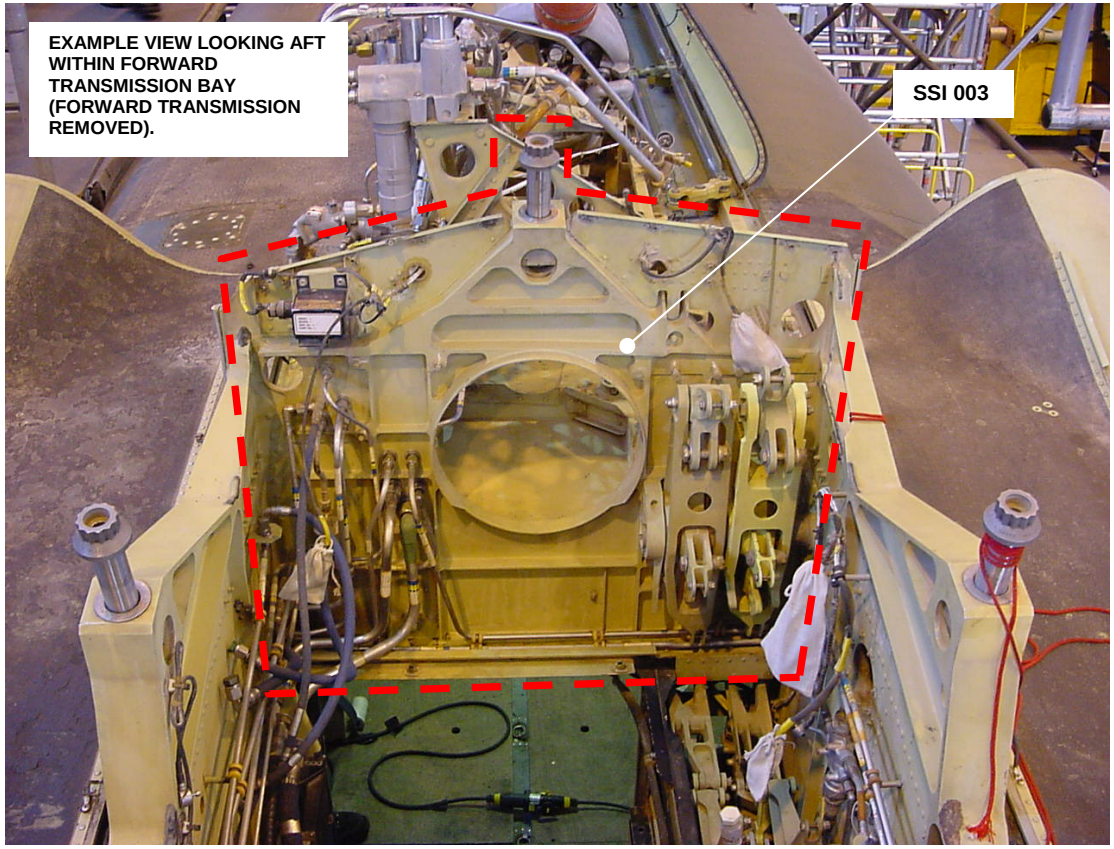

Fig 3 Crown former (STA 120, including paratroop anchor line support at BL 8L WL 41) (Example view)

Page 17

Figure 5 Example 3 of a DAP Topic 5V SSI identification figures

5

SIGNIFICANT ITEMS: IDENTIFICATION, SAMPLING AND REPORTING
STRUCTURE - SCHEDULED EXAMINATION AND SAMPLING REQUIREMENTS
CHINOOK ALL MKS

DAP 101C-0500-5V
Sect 2
Chap 1

MASTER SSI LIST AND SSI IDENTIFICATION FIGURES

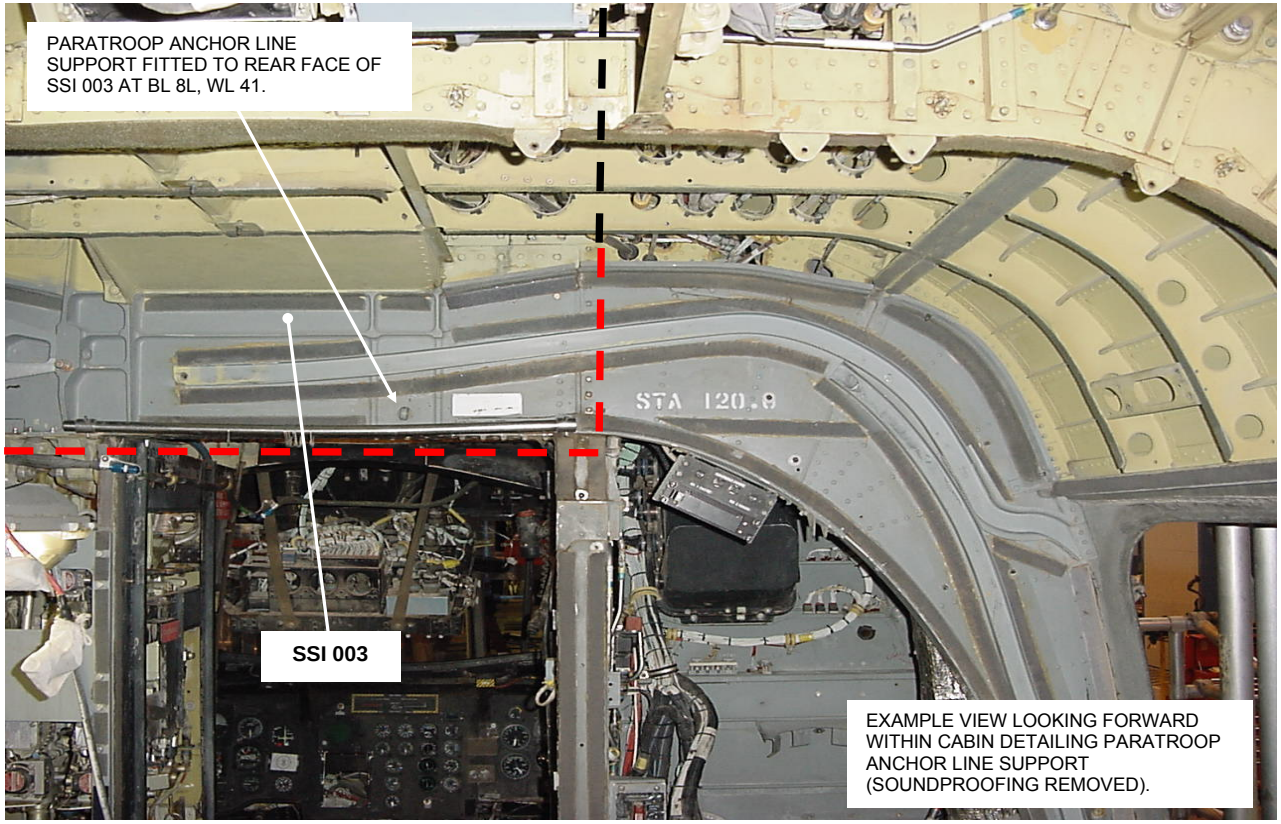

Fig 3 Crown former (STA 120, including paratroop anchor line support at BL 8L WL 41) (Further example view)

Page 18

Figure 6 Example 4 of a DAP Topic 5V SSI identification figures

5

SIGNIFICANT ITEMS: IDENTIFICATION, SAMPLING AND REPORTING
STRUCTURE - SCHEDULED EXAMINATION AND SAMPLING REQUIREMENTS
CHINOOK ALL MKS

DAP 101C-0500-5V
Sect 2
Chap 3

SAFETY OF FLIGHT STRUCTURE LIST

Boeing report TA2105-05B dated 15 May 08 contains Safety of Flight Structure (SoFS) information for the Chinook (All Mks). This information is summarized below, together with a column indicating the associated SSI:

Main Assembly	Description	Associated SSI
Fuselage	Aft fuselage idler bellcranks support (STA 444 WL 55 BL 8L)	027
	Aft fuselage walking beam bellcrank support (STA 482 forward face BL 18L)	028
	Aft fuselage bellcrank support (STA 482 aft face BL 18L)	029
Nacelles/Pylons	Aft pylon lower bellcrank support (STA 528 WL 72 BL 5L)	030
	Aft pylon lower bellcrank support (STA 537.25 WL 72 BL 5R)	031
Fuselage	Tunnel idler and walking beam assembly support structure	032
	Forward rotor pivoting actuator bellcrank support	033
	Forward rotor swivelling actuator bellcrank support	034
Rotors/Flight control	Yoke assembly (forward)	035
Nacelles/Pylons	Aft pylon upper bellcrank support (STA 553 WL 104 BL 8L)	036
	Aft pylon upper bellcrank support (STA 562 WL 97 BL 8R)	037
Rotors/Flight control	Yoke and support assembly (Aft)	038
Auto Flight	Longitudinal cyclic trim actuator	039
Indicating/Recording	Cruise guide link	040
Rotors/Flight control	Forward longitudinal cyclic trim yoke shaft	041
	Pivoting actuator mounting	042
	Swivelling actuator mounting	043
	Pivoting actuator (Forward and aft)	044
	Swivelling actuator (Forward and aft)	045
Main Rotors	Controllable swashplate assembly	046
	Rotating ring assembly	046A
	Forward stationary ring assembly	046B
	Aft stationary ring assembly	046C
	Swashplate bearing	046D
	Drive collar	046E
	Upper drive arm	046F
	Lower drive arm	046G
	Pitch link	046H

Page 1

Figure 7 Example of a typical DAP Topic 5V safety of flight structure list

CHAPTER 19-4

AIRCRAFT TOPIC 5V
SECTION 3 - STRUCTURE SAMPLING - PLANNED SAMPLING PROGRAMME

CONTENTS

Para

1 Introduction
2 Details of Topic 5V section 3

INTRODUCTION

1 Some items listed in Section 2 may require planned sampling, which is sampling that is to be done at a specific predetermined interval, but not included as a scheduled examination in the scheduled maintenance programme. Section 3 details any planned sampling programme established by the Project Team (PT) responsible for those items.

DETAILS OF TOPIC 5V SECTION 3

2 Chapter 1 is the only prescribed chapter for Section 3, detailing the planned sampling programme, which must be able to satisfy the sampling target stipulated in ►MRP RA5720◄. It is probable that the majority of planned sampling will occur concurrently with a scheduled maintenance or other depth activity as this should minimise the maintenance penalty due to access, equipment removal or other significant requirements. However, this may not be possible for some items, in which case the alternatives are opportunity sampling (Section 4) or teardown sampling (Section 5).

3 A Structure Sampling Procedure (SSP) may be required for those items of structure where there is a lack of information in the Aircraft Maintenance Manual (AMM), repair scheme, rework or modification instructions. SSPs are to be numbered sequentially (starting with SSP 001) and promulgated in Section 6 of the Topic 5V.

4 The requirements of a planned sampling programme will vary for each aircraft type, consequently there is no prescribed format for its promulgation; however, it is recommended that a plan is presented in a tabular format. Depending on the amount of information to be conveyed, a single table covering all requirements, or a table for each item may be required. As a minimum, the following information is to be included:

4.1 Item or area description, including any applicable SSI or SoFS reference.

4.2 Examination requirement, such as general visual, use of remote viewing aids, NDT, etc, including any AMM reference.

4.3 If applicable, an SSP reference number. Some items of structure within the Planned Sampling Programme may require detailed SSPs, which are to be promulgated in Section 6.

4.4 When the planned sampling is to occur; eg, first Major servicing, during mid-life update, planned major rework, etc. Periodicities may also be specified as initial and subsequent periodicities.

4.5 Factors affecting choice of aircraft; eg, fleet leader (using any relevant metric including flying hours, landings, fatigue index etc), display aircraft or other arduous role, theatre of operations, etc.

4.6 Any relevant additional information.

5 Section 3 should also include the reporting instructions for planned sampling. Both positive and negative reporting is recommended to enable the PT to establish the extent of existing conditions. Reporting procedures are detailed in Section 1, Chapters 2 to 6.

CHAPTER 19-5

AIRCRAFT TOPIC 5V
SECTION 4 - STRUCTURE SAMPLING - OPPORTUNITY SAMPLING

CONTENTS

Para

1 Introduction
2 Details of Topic 5V section 4

INTRODUCTION

1 Some items listed in Section 2 may require opportunity sampling, which is sampling that is to be done whenever a suitable opportunity arises. Section 4 details any opportunity sampling established by the platform PT for those items.

DETAILS OF TOPIC 5V SECTION 4

2 Section 4 contains a list of any opportunity sampling requirements. The location of some structural items may require excessive dismantling of the surrounding area in order to gain access. Such actions are not generally suitable for inclusion in the Opportunity Sampling Programme due to the maintenance penalty and risk of accidental damage during the dismantling and rebuilding of the surrounding area, consequently an alternative may be opportunity sampling. Each platform PT is to maintain a list of such items in Section 4 plus the suitable opportunities (eg local repair, removal of adjacent structure or equipment etc) that would enable sampling of these items to take place. Some items have maintenance tasks in the Master Maintenance List (MML) with a random frequency (eg every wing removal, engine removal etc); consequently they should also be listed as items requiring opportunity sampling.

3 A Structure Sampling Procedure (SSP) may be required for those items of structure, where there is a lack of information in the Aircraft Maintenance Manual (AMM), repair scheme, rework or modification instructions. SSPs are to be numbered sequentially (starting with SSP 001) and promulgated in Section 6 of the Topic 5V.

4 Chapter 1 is the only prescribed chapter for Section 4, detailing the list of items requiring opportunity sampling. The requirements will vary for each aircraft type, consequently there is no prescribed format for the promulgation of the opportunity sampling requirements; however, it is recommended that it is presented in a tabular format. Depending on the amount of information to be conveyed, a single table covering all requirements, or a table for each item may be required, with columns for the following suggested information as a minimum:

4.1 Item or area description, including any applicable SSI or SoFS reference.

4.2 Whether the item requires sampling to satisfy the sampling target stipulated in ►MRP RA5720◄.

4.3 Examination requirement, such as general visual, use of remote viewing aids, NDT, etc, including any AMM reference.

4.4 If applicable, an SSP reference number. Some items of structure within the Opportunity Sampling Programme may require detailed SSPs, which are to be promulgated in Section 6.

4.5 When the sampling is to take place; eg, item replacement, Cat 2, Cat 3, Cat 4 repairs or during rework or modification activity etc, when the aircraft is sufficiently stripped to enable examination of an item which would normally be inaccessible.

4.6 Additional information, as required.

5 Section 4 should also include the reporting instructions for opportunity sampling. Both positive and negative reporting is recommended to enable the PT to establish the extent of any problems. Reporting procedures are detailed in Section 1, Chapters 2 to 6.

CHAPTER 19-6

AIRCRAFT TOPIC 5V
SECTION 5 - STRUCTURE SAMPLING - TEARDOWN SAMPLING

CONTENTS

Para

1 Introduction
2 Details of Topic 5V section 5

INTRODUCTION

1 Some items listed in Section 2 may require teardown sampling, which is a generally destructive sampling process that is only to be done when directed by the Project Team (PT). Section 5 details any teardown sampling established by the appropriate PT.

DETAILS OF TOPIC 5V SECTION 5

2 Section 5 contains a list of any teardown sampling requirements. Teardown sampling may be applied to the complete structure or to specific areas, and involves a detailed, progressive and controlled strip-down of the structure, which is often a destructive process. Consequently, this is generally the final sampling option due to economic constraints, which is normally only done at the end of a full-scale fatigue test or to sample the condition of an ageing aircraft fleet.

3 Teardown sampling is to be done only as directed by the platform PT when suitable airframes or assemblies become available due to life expiry, Cat 5 damage etc. A detailed procedure will be required to gain the greatest benefit. Teardown sampling may be done by the Service, contractors, or the manufacturer; consequently the format of the teardown procedures may vary, but it is recommended that they are promulgated in Section 6 of the Topic 5V as a Structure Sampling Procedure (SSP). SSPs are numbered sequentially, starting with SSP 001.

4 Chapter 1 is the only prescribed chapter for Section 5, detailing the list of items requiring teardown sampling. The requirements will vary for each aircraft type and there is no prescribed format for the promulgation of the teardown sampling requirements; however, it is recommended that it is presented in a tabular format. Depending on the amount of information to be conveyed, a single table covering all requirements, or a table for each item may be required, with columns for the following suggested information as a minimum:

4.1 Item or area description, including any applicable SSI or SoFS reference.

4.2 Whether the item requires sampling to satisfy the sampling target stipulated in ►MRP RA5720◄.

4.3 The SSP or other teardown procedure reference number.

4.4 Reporting instructions that are particular to each teardown procedure, and consequently possibly embedded within the SSP or other teardown procedure. For simple teardown procedures the reporting procedures in Section 1, Chapters 2 to 6 may suffice.

4.5 Additional information, as required.

CHAPTER 19-7

AIRCRAFT TOPIC 5V
SECTION 6 - STRUCTURE SAMPLING - STRUCTURE SAMPLING PROCEDURES

CONTENTS

Para

1 Introduction
2 Details of Topic 5V section 6

INTRODUCTION

1 Section 6 contains Structure Sampling Procedures (SSP) for any structural sampling that lacks suitable supporting information in the Aircraft Maintenance Manual (AMM).

DETAILS OF TOPIC 5V SECTION 6

2 Some items of structure with sampling requirements detailed in Section 3 (Planned Sampling Programme), Section 4 (Opportunity Sampling) or Section 5 (Teardown Sampling) may require detailed sampling procedures due to the complexity of the task or because there is a lack of information in the AMM. SSPs for such items are to be numbered sequentially (starting with SSP 001) and promulgated in this section of the Topic 5V. It is recommended that all SSPs are written on standard work cards (MOD Form 707MS), with Stage Inspections being called up as necessary. To prevent conflicting amendment states, this section is not to contain copied details of any instructions required to gain access to items that are detailed elsewhere; ie, in sections of the AMM, repair schemes, etc. In such cases, the SSP is to cross-refer to the documents detailing the access instructions. Similarly, cross-references should also be made to any NDT techniques that need to be applied.

3 Section 6 should start with a list of contents in standard list format, listing the SSP title and corresponding SSP number. This should be followed by each SSP in numerical order.

CHAPTER 19-8

AIRCRAFT TOPIC 5V
SECTIONS 7 TO 10 - SCHEDULED MAINTENANCE AND SAMPLING OF FUNCTIONALLY SIGNIFICANT ITEMS

CONTENTS

Para

1 Introduction
2 Compilation

Table Page

1 System scheduled maintenance and sampling requirements 1

INTRODUCTION

1 Sections 7 to 10 of the Topic 5V contain any scheduled maintenance and sampling requirements for significant items relating to those aircraft systems other than structure. A non-structural significant item is termed a Functionally Significant Item (FSI); however, only those FSIs with failure consequences that would impact upon airworthiness integrity should be considered for inclusion into the Topic 5V. The FSIs to be specified are assigned to the following system groups: Avionic and Electrical, Propulsion, Mechanical, and Weapons. The details of each group are contained in the respective sections of the Topic 5V as shown in Table 1.

TABLE 1 SYSTEM SCHEDULED MAINTENANCE AND SAMPLING REQUIREMENTS

Section 7	Avionic and Electrical Systems - Scheduled Maintenance and Sampling Requirements
Section 8	Propulsion Systems - Scheduled Maintenance and Sampling Requirements
Section 9	Mechanical Systems - Scheduled Maintenance and Sampling Requirements
Section 10	Weapon Systems - Scheduled Maintenance and Sampling Requirements

COMPILATION

2 The policy to determine the requirements arising from System and Propulsion Integrity Management is still being developed and presently only the associated section heading details for each system group have been identified in the Topic 5V. There is no prescribed format for these sections as yet; however, as system and propulsion integrity policy matures and the sampling requirements become more distinguishable then the format of each section will be defined.

3 It is envisaged that as the system sections are populated, each section will require its own set of introductory pages, in which case Section 1 of the Topic 5V, and the ►MRP RA5721◄ and ►RA5722◄may provide useful guidance. It is recommended that any introductory pages become Chapter 1, and that subsequent chapters should align with Sections 2 to 6 of the Topic 5V.

CHAPTER 20-0

TOPIC 5W SUMMARY OF COMPONENT REPAIR PLANS

CONTENTS

Para

1 Introduction
4 Format of a Topic 5W summary of component repair plans
5 Preliminary pages
5 Front cover
7 Amendment record
8 Contents
9 Introduction
10 List of systems and sub-systems
11 List of component repair plans
12 Layout of component repair plan sheets

Table Page

1 CRL sheet supporting information 3

Figure Page

1 Layout of a Topic 5W summary of component repair plans 4
2 Example of a Topic 5W front cover 5
3 Example of a Topic 5W contents page 6
4 Example of a Topic 5W introduction page 7
5 Example of a Topic 5W introduction (continued) page 8
6 Example of a Topic 5W list of systems and sub-systems page 9
7 Example of a Topic 5W list of component repair plans page 10
8 Example of a Topic 5W component repair plan sheet 11
9 Example of a portrait style Topic 5W component repair plan sheet 12

INTRODUCTION

1 The Summary of Component Repair Plans (S of CRP) defines the repair actions that can be done at forward and depth levels of support on components and air radio installations of: aircraft, role equipment or a specific aircraft fit (eg, reconnaissance pod or missile).

2 The Topic 5W contains mandatory equipment repair policies which comply with the Inspect and Repair as Necessary (IRAN) principle (►MAP-01 Chapter 5.1◄) and is authorized for use by the associated equipment PTs. The nominated Publication Organization is responsible for the compilation, publishing and maintenance of the S of CRP.

3 It should be noted that the presentation of a Topic 5W as previously described in AP 100C-20 (3rd Edition June 94) is no longer correct due to changes in the terms and definitions applicable to equipment support. For example, the concepts of Lines (1st Line, 2nd Line, etc) and Depths (A, B, C or D) are now obsolete and have been replaced with the 'Forward' and 'Depth' philosophy. The presentation of a Topic 5W described in this chapter is an updated version of the original based on perceived current requirements. The given examples of Topic 5W pages are presented in an A4 landscape format; however, a Topic 5W may be produced in an A4 portrait format, if required.

FORMAT OF A TOPIC 5W SUMMARY OF COMPONENT REPAIR PLANS

4 A Topic 5W consists of a series of preliminary pages followed by a compilation of Component Repair Plan (CRP) sheets that are presented in numerical order by system/sub-system, LRU and where applicable module number. The layout of a Topic 5W is shown in Figure 1.

PRELIMINARY PAGES

Front cover

5 The front cover forms the title page of a Topic 5W. However, a Topic 5W may need to be produced as several books if its contents cannot be contained within one cover. If multiple books are used, the number of each book is to be listed at the end of the AP number at the top right corner of the page; eg, AP Code-5W1, AP Code-5W2, etc. In addition, the range of SYSTEMS contained within each book is stated in the publication title; eg, SYSTEMS 15 to 32.

6 An example of a Topic 5W Front Cover is shown in Figure 2.

Amendment record

7 The Amendment Record is a common preliminary page as described in Chapter 2. Examples of A4 size Amendment Records are presented in Chapter 2-0, Figures 4 to 7.

Contents

8 The Contents page contains a list of headings that summarizes the make up of a Topic 5W. An example aircraft Topic 5W Contents page is shown in Figure 3.

Introduction

9 The introduction provides supplementary information regarding the general use of a Topic 5W. Example Topic 5W Introduction pages are shown in Figure 4 and Figure 5.

List of systems and sub-systems

10 The allocation of the system/sub-systems into which the aircraft or equipment is divided for maintenance purposes is detailed in the List of Systems and Sub-systems page. If multiple books are used, only the systems and sub-systems associated with a particular book are listed. An example of a Topic 5W List of Systems and Sub-systems page is shown in Figure 6.

List of component repair plans

11 The List of Component Repair Plans identifies all the CRP sheets contained in the Topic 5W. If multiple books are used, only the CRP sheets associated with a particular book are listed. The list is presented in numerical order by system/sub-system, LRU and where applicable module number. Each system within the list begins on a new page. An example of a Topic 5W List of Component Repair Plans page is shown in Figure 7.

LAYOUT OF COMPONENT REPAIR PLAN SHEETS

12 Existing CRP sheets may have been produced as single sided sheets, unless additional information caused a spill-over onto the reverse side of the sheet. However, new and revised CRP sheets should be produced double sided using the following guidelines:

12.1 Each system is to start on a facing page.

12.2 When a single CRP sheet is double sided it is to start on a facing page. The preceding page is to be left blank as required.

12.3 The blank side of a sheet is to be annotated 'Intentionally blank'.

13 Additional supporting information to assist authors in the compilation of a CRL sheet is shown in Table 1.

TABLE 1 CRL SHEET SUPPORTING INFORMATION

BLOCK 1	LRU/MOD IDENT	Figure entered directly reflects last element of sheet number.
	SECT REF/NATO STK NO.	Sect/Reference or NATO stock number if available not a combination or both. If both available alternate number can be quoted in ADDITIONAL INFORMATION field.
	ALSO FITTED TO	Enter other types of aircraft to which fitted if applicable. If component is used in specific marks covered by all marks book then the mark applicability can be shown in BLOCK 3 - ADDITIONAL INFORMATION.
BLOCK 2	AUTHORIZED REPAIR Outline of Repair Operation	ON aircraft. Interim repair policies to be indicated eg In-service date (ISD) + 2 years. OFF aircraft. As ON aircraft plus the following: 1. The example of Module replacement denotes limited recovery. If total recovery achieved by module replacement insert 'Replace modules as necessary' 2. If total recovery achieved by piece part replacement insert 'Replace piece parts as necessary'.
	Air Publication	AMM plus any relevant ON aircraft publication.
	Special Tools and Equipment	1. Only list tools or equipment not quoted in relevant publication. 2. For ARI systems enter ALTE reference. 3. If Loc Man equipment not in relevant publication list piece parts required or GSS drawing number.
BLOCK 3	ADDITIONAL INFORMATION	If alternative items are available they are to be listed as follows: a. Alternative item: NSN or Sect Ref followed by Part No. b. Alternative items: NSN or Sect Ref followed by Part No. Next item(s) in a column under previous item(s).

14 An example of a CRP sheet in A4 landscape format is shown in Figure 8.

15 An example of a CRP sheet in A4 portrait format is shown in Figure 9.

Front Cover (Title Page)

Amendment Record
(See Chap 2-0)

Contents

Introduction

List of Systems and Sub-systems

List of Component Repair Plans

Component Repair Plans in
System/Sub-system Order

Figure 1 Layout of a Topic 5W summary of component repair plans

AP Code-5W1
Month Year

Ministry of Defence

AIRCRAFT NAME

SUMMARY OF COMPONENT REPAIR PLANS

SYSTEMS 15 TO 32

Sponsored for use within
UK Military Aviation
by
(Designated) PTL

Publication Organization:
as nominated by the Sponsor

Service users should send their comments
through the channel prescribed for the purpose in:

►MAP-01 Chapter 8◄

Page (i)/(ii)

Figure 2 Example of a Topic 5W front cover

SUMMARY OF COMPONENT REPAIR PLANS

AP Code-5W1

AIRCRAFT NAME
SYSTEMS 21 TO 30

CONTENTS

Preliminary Material — Page

Front Cover (Title page) ..... (i)/(ii)
Amendment record ..... (iii) and (iv)
Contents (This page) ..... (v)/(vi)
Introduction ..... (vii) and (viii)
List of systems and sub-systems ..... (ix)/(x)
List of component repair plans ..... (xi) to (xx)

Component Repair Plans

As listed on pages (xi) to (XX).

E0018 ( ) (v)/(vi)

Figure 3 Example of a Topic 5W contents page

SUMMARY OF COMPONENT REPAIR PLANS AP Code-5W1
AIRCRAFT NAME
SYTEMS 21 TO 30

INTRODUCTION

PURPOSE

1 This Summary of Component Repair Plans (S of CRP) defines the level of maintenance at which repairs are to be done on components and Air Radio Installations (ARIs) of the (Aircraft name) aircraft. This information is not to be regarded as restricting any authorized freedom of action or the application of engineering judgement to meet particular requirements in cases of operational necessity.

CONSTRUCTION

2 Each component sheet of this S of CRP gives the following information:

BLOCK 1	LRU/MOD IDENT	Line replacement unit (LRU)/Module (MOD) identification number
	NOMENCLATURE	Nomenclature of the item (noun first, followed by description)
	SECT/REF: NATO STK NO	Section/Reference or NATO stock number
	PART NO	Manufacturers part or drawing number
	MOD ENG BRANCH	MOD Engineering specialist branch which is responsible for the item
	ALSO FITTED TO	Lists other aircraft types/marks which have the item fitted
BLOCK 2	AUTHORIZED REPAIR	
	Location	Shows the location of the recommended repair operation as either ON or OFF aircraft
	Outline of Repair Operation	Details the extent of the repair
	Trade	Details the trade or trades responsible for doing the repair
	Air Publication	Lists the Air Publications (APs) required to support the repair operation
	Special Tools and Equipment	Lists special tools and equipment required to support the repair

E0018 ( ) Page (vii)

Figure 4 Example of a Topic 5W introduction page

AP Code-5W1

INTRODUCTION (Contd)

2 (Contd)

BLOCK 3 ADDITIONAL INFORMATION Lists alternative items, modification states and other information as necessary

TRADE ABBREVIATIONS

3 the following trade abbreviations are used in this topic:

Mech(AF)	-	Mechanical (Airframe)
Wpns	-	Weapons
AV(Elect)	-	Avionics (Electrical)
Mech(Prop)	-	Mechanical (Propulsion)
Av(AV)	-	Avionics (Avionics)
SE	-	Survival Equipment
NDT	-	Non-destructive testing
Ptr/Fnr	-	Painter and Finisher

AUTHORS NOTE:
The abbreviations shown are examples only. Appropriate abbreviations should be selected from the lists presented in Chapter 1-4.

AMENDMENTS

4 New or amended matter is shown by a vertical line in the left-hand margin. Amendment procedure is detailed in ▶MAP-01 Chapter 8◀.

E0018 ( ) Page (viii)

Figure 5 Example of a Topic 5W introduction (continued) page

SUMMARY OF COMPONENT REPAIR PLANS
AIRCRAFT NAME
SYSTEMS 21 TO 30

AP Code-5W1
xx Edition

LIST OF SYSTEMS AND SUB-SYSTEMS

21 ENVIRONMENTAL CONTROL

20 Distribution
40 Heating

22 AUTO FLIGHT

11 Aileron Autopilot Servo System
12 Elevator Autopilot Servo System
13 Elevator Trim Autopilot Servo System

23 COMMUNICATIONS

60 Static Discharging
70 Voice Recording System

24 ELECTRICAL POWER

00 General
30 DC Generation
70 Electrical Monitoring and Protection

25 EQUIPMENT AND FURNISHINGS

00 General
10 Flight Compartment
20 Passenger Compartment
22 Passenger Seats
23 Rear Crew Seat
60 Emergency Equipment
61 ELT 910 System

26 FIRE PROTECTION

10 Detection
20 Extinguishing

27 FLIGHT CONTROLS

00 General
10 Aileron
20 Rudder
25 Rudder Trim
30 Elevator
32 Elevator Trim
33 Stall Warning System
50 Flaps

28 FUEL

10 Storage
20 Distribution
21 Fuel Cock System
22 Wing Tip Tanks
40 Indicating

30 ICE AND RAIN PROTECTION

10 Airfoil
20 Air Intakes

E01234 ( )

Page (xxvii)

Figure 6 Example of a Topic 5W list of systems and sub-systems page

SUMMARY OF COMPONENT REPAIR PLANS
AIRCRAFT NAME
SYTEMS 21 TO 30

AP Code-5W1

LIST OF COMPONENT REPAIR PLANS

SYSTEM 22 AUTO FLIGHT

Sheet No.		Sheet No.
22/10/01	FDIC Modules	
02	FDIC Modules	
03	FDIC Modules	
11/01	Forward Cyclic Pitch Actuator	
02	Forward Cyclic Trim Indicator	
03	Aft Cyclic Pitch Actuator	
04	Aft Cyclic Trim Indicator	
12/01	AFCS Unit No.1 and No.2	
02	AFCS control panel	
03	Base Assembly	
04	Base Electronics PCB	
05	Computer Assembly AFCS	
06	Chassis Assembly (AFCS)	
07	AFCS Logic PCB	
08	AFCS Roll Axis PCB	
09	AFCS Pitch Axis PCB	
10	AFCS Yaw Axis PCB	
11	BITE No.1 PCB (AFCS)	
12	BITE No.2 PCB (AFCS)	
13	Synchroniser PCB (AFCS)	
14	Collective PCB (AFCS)	
15	Power Supply PCB (AFCS)	
16	Power Switching PCB (AFCS)	
14/01	Collective CCDA	
15/01	Pitch CCDA	

E0018 ( )

Page (xv)/(xvi)

Figure 7 Example of a Topic 5W list of component repair plans page

SUMMARY OF COMPONENT REPAIR PLANS
AIRCRAFT NAME
SYTEMS 21 TO 30

AP Code-5W1

System 21 NAVIGATION AND FLIGHT AIDS — Sub-system 10 INERTIAL NAVIGATION (FIN 1075)

BLOCK 1	LRU/MOD IDENT	NOMENCLATURE	SECT REF/NATO STK NO.	PART NO.	MOD ENG BRANCH	ALSO FITTED TO
	01	Inertial Navigation unit	6605-99-7108048	3854-44311	XXXXX PT	Aircraft name

BLOCK 2 — AUTHORIZED REPAIR

Location	Outline of Repair Operation			Trade	Air Publication	Special Tools and Equipment
ON	Replace:	Desiccator		AV	AMM	
		Control panel				
	Replace					
OFF	Standard serviceability test			AV	112B-0733-1A	AST 1200 ATE and GPS 'Hot Rig' test set
	Replace:	Synchro phasing card	(01)			
		Card Synchro interface	(02)			
		Synchro processing card	(03)			
		Mode control logic card	(04)			
		Arithmetic card	(05)			
		Control computer card	(06)			
		Program card	(07)			
		AC output card	(08)			
		1553 Interface card	(09)			
		Spin motor supply card	(10)			
		Output stages card	(11)			
	Replace piece parts as necessary					

BLOCK 2 — ADDITIONAL INFORMATION

Maintenance policy is applicable to Pre and Post Mod items
Alternative items: NSN 1680-01-1820339 Pt No. 70051600-2
NSN 1680-01-1820340 Pt No. 70051600-3

E0018 ( ) — Amdt XX Sheet 21/10/01

Figure 8 Example of a Topic 5W component repair plan sheet

SUMMARY OF COMPONENT REPAIR PLANS
AIRCRAFT NAME

AP Code-5W

System: **FLYING CONTROLS**
Sub-System: **GENERAL**
Syst/Sub-Syst **19/00/02**

NOMENCLATURE	SECT/REF: NATO No.	PART No.
MIXING UNIT ASSEMBLY	See additional information	See additional information

LRU IDENT	AC MK	MOD ENG SPEC BRANCH	SM ITEM MANAGER	CLASS OF STORE	PRIME EQUIPMENT PACK
02	MK1	PGPT	Pgz-pglogs2b 75G2C	L	

AUTHORIZED REPAIR

LOC	AIR PUBLICATIONS	OUTLINE OF REPAIR OPERATION	TRADE	SPECIAL TOOLS AND EQUIPMENT
On	AMM	Replace: Levers	Ac	526LE/3839153 Rigging kit
Off	101C-0901-6A	Replace: Piece parts as necessary	Ac	NIL

ADDITIONAL INFORMATION Lever, roll 526LE/2872623 Pt No 341A27-1620-00
Lever, pitch 526LE/2872622 Pt No 341A27-1619-00
Lever, common 526LE/2872625 Pt No 341A27-1614-20

ALSO FITTED TO N/A

DEPTH SERVICING AGENCY GDSH

4th Edition May 08 19/00/02

Figure 9 Example of a portrait style Topic 5W component repair plan sheet

CHAPTER 21-0

MAINTENANCE SCHEDULES IN A PORTABLE DOCUMENT FORMAT

CONTENTS

Para

1 Introduction
7 General requirements
7 Basic configuration
8 Deliverable version number
9 Version numbering system
12 Security
15 Classified publications
16 Presentation
16 Disc media
19 Opening and navigating through a publication
20 Bookmarks
22 Title page
23 Amendment information sheet
24 Amendment Record
25 Record of Advance information Leaflets (AIL)
26 Contents pages and lists
27 Publication set-up of pages/sheets/cards

Figure Page

1 Typical layout for a single topic disc media case label 5
2 Typical layout for a multiple topic disc media case label 6
3 Typical layout for a single topic disc media skin label 7
4 Typical layout for a multiple topic disc media skin label 8
5 Example - PDF publication initial opening 9
6 Example - PDF bookmark structure 10
7 Example - PDF title page 11
8 Example - PDF Topic 5A1 amendment information sheet 12
9 Example - PDF other topics (5B2A) amendment information sheet 13
10 Example - PDF Topic 5A1 amendment record 14
11 Example - PDF other topics (5B2A) amendment record 15

INTRODUCTION

1 The information contained in this chapter applies to new and legacy maintenance schedules that are presented in an electronic Portable Document Format (PDF). Adobe ® PDF is a universal electronic file format that preserves all fonts, formatting, graphics and colour of any source document, regardless of the application and platform used to create it.

2 The production of unclassified maintenance schedules in PDF was developed to provide Topic 5 publications in a format that was readable on virtually all PCs and computer systems without the need for specialist viewer, or licensed software. In addition, the PDF option allowed ready conversion of legacy publications into an electronic format and provides good levels of functionality built in to enable the user to navigate the publication.

3 Publications delivered in PDF are produced from softcopy masters created from word processor, scanned-in hardcopy or from bespoke software. For illustrative and practical purposes, the procedures and examples given in this chapter are for page-oriented publications produced initially from 'Microsoft Word ®' software and utilizing 'Adobe Acrobat ®' software to provide the PDF. The version of software used must enable backward read compatibility to 'Acrobat version 5.0' as a minimum.

4 Topics 5 publications produced in PDF are created from softcopy masters at the stage when they would normally be printed as Camera-ready Copy (CRC) masters for hardcopy production. The layouts, writing rules,

configuration requirements, processes and quality assurance procedures presently in place up to the CRC production stage should be strictly maintained and adhered to. If the TI sponsor has chosen the PDF deliverable option, the process for PDF production enters at the point of, and in place of, CRC hardcopy production.

5 The publication can be provided to the user on Compact Disc (CD), Digital Versatile Disc (DVD) or as a web accessible document. The media deliverable is determined and directed by the TI sponsor.

6 This chapter identifies the presentation requirements of the publication and the level of functionality the document is to provide to the user.

GENERAL REQUIREMENTS

Basic configuration

7 All topics 5 that have been created or converted to PDF or have been subject to subsequent amendment action will have been created in accordance with existing processes and procedures leading up to hardcopy production. With a few minor exceptions detailed later in this chapter, the structure, layout and presentation of the publication in PDF should be exactly as it would be presented in hardcopy. Any subsequent changes made to the publication and its amendment state are to be reflected within the document by use of amendment numbers and indicating marks on its pages strictly in accordance with the established writing rules and procedures for hardcopy publications.

Deliverable version number

8 Maintenance schedules produced in PDF and delivered to the web or on disc media are to carry a version number on its web title or, disc media skin and box label. This number represents the configuration of the topic(s) it carries and reflects its 'issue' as a deliverable from the PO. For example, an AP currently at AL6 and converted to a PDF DAP is to show itself at AL6 with all amendment details included, this first version of the DAP will be issued as Version 1.0 to the web or disc media. Any subsequent amendment action to the DAP for AL7 then AL8 etc will require the publication to be issued as Version 1.01 then Version 1.02 and so on.

Version numbering system

9 The version numbering system for web and disc media solely identifies the electronic issue number of the product/deliverable from the PO and does not necessarily correlate directly to the amendment states of the topic(s) therein. The version numbering system should be limited to a maximum of two decimal places. The initial creation of the publication is deemed version 1.0; the decimal value should indicate the issue number of that version. If a full or major RCM/Authors review is done to the existing publication at any stage that will cause considerable change to the publication then the reviewed publication becomes version 2.0 and so on in the same manner as a new edition hardcopy. In addition, a publication is produced as Version 2.0 when an amendment to Version 1.99 is incorporated. The numbering convention is as follows:

Version 1.0	Initial issue of any publication(s) as a DAP in PDF.
Version 1.01 to 1.99	Represents the subsequent issues of the DAP through amendment action.
Version 2.0	A completely new version (new edition) created to replace version 1 series, or an amendment to Version 1.99 is incorporated.
Version 2.01 to 2.99	Represents the subsequent issues of the new version DAP through amendment action.

10 A DAP is identified by its code number followed by its version number; ie, 'DAP XXXX-XXXX-XXX Version 1.0'. Examples of disc media version numbering are shown in Figure 1 and Figure 2.

11 The majority of Topic 5 publications presented in PDF will be required to provide printed copy for the user and for Topics 5V in particular, provide a facility to fill in forms on-screen and print from the publication. Each publication is to be configured to the TI sponsors requirements.

Security

12 Each publication should be password protected using the Adobe software's standard levels of security; this protection is to be applied throughout the publication's development and promulgation to prevent inadvertent corruption of the softcopy at the authoring level.

13 For disc media output, no further security measures are required as read-only disc content is incorruptible once released. For web-accessible publications, a higher level of protection should be applied to prevent external corruption; particular care is to be taken to restrict edit functions to the user.

14 Publications presented in PDF that provide information only (i.e. topics 5A1, 5L) and provide a print function to the user, are to show the warning 'UNCONTROLLED COPY WHEN PRINTED' in Arial 10pt normal font across the bottom of the pages printed. If a publication contains F707MS or work cards that may be printed off and used as a master or live document, each page is to show the warning 'Uncontrolled copy from DAP 101X-XXXX-XXX to ALX' across the top of the page in Arial 10pt normal font. It will be for the user's local management to amend and certify the printed document to a 'controlled copy'. Both types of warning are to be invisible on screen but visible on the printed material.

Classified publications

15 The production of classified publications to disc media should be carefully controlled in accordance with the local instructions used for hardcopy material. The colour coding of the covers and labels should comply with the requirements of JSP 543. Web accessible publications of restricted classification and above are not permitted unless expressly required and directed by the TI sponsor.

PRESENTATION

Disc media

16 The disc media case or box should be a robust, black plastic (non jewel case) CD or DVD case that can accommodate an identifying case cover or label inside an outer clear plastic sleeve. The case should be deep enough to house the disc and a limited amount of printed material to be placed inside (Urgent Signal AIL etc). The inside front cover of the case should have clips to retain any printed material.

17 The disc media case cover should show all the details of the publication in a format closely resembling the front cover of a hardcopy AP Topic 5. It is to carry the MoD crest and clearly identify the DAP code number and contents to the user. The rear side of the cover should show any special instructions and information for the user. The dimensions of the case cover may vary according to the type of case provided and the example given at Figure 1 is for a DVD case of 140mm by 125mm by 15mm deep.

18 The disc media skin label should show all the details of the publication in a format closely resembling the front cover of a hardcopy AP topic 5. It should carry the MoD crest and clearly identify the DAP code number and contents to the user. Examples of a disc media skin label are given at Figure 3 and Figure 4.

Opening and navigating through a publication

19 On initial opening, a publication should be presented to the user with a split screen showing the bookmarks on one side and an image of the title page of the publication on the other. The toolbars shown at the top of the screen should be the Menu bar and the page navigation toolbar in the layout shown in Figure 5.

Bookmarks

20 The publication should be fully indexed using bookmarks logically structured and presented with indent levels to Section/chapter/page/card or sheet (or equivalent indented subject matter titles) as required. Further 'drill down' beyond these levels (ie, to individual SIN or line entry) is to be avoided. An example of bookmark structures for Topics 5 publications is shown in Figure 6.

21 Each bookmark entry should be linked to its subject matter destination to allow the user to navigate directly to the page image. Where a bookmark has been created as a sub-element indent of a higher-level element but has no destination page to go to within the publication, a link is to be created from that bookmark to

the contents page of its higher-level element. Where a bookmark has been created only to show itself as an element within the publication structure, but has neither a destination page image nor a contents list to be linked to, the words "(Not Issued)" are to be added to the bookmark title.

Title page

22 The title page is the first page (i) of the topic and is presented with the page centred from left and right edges; it is to contain the publication details in the format shown by the style sheet at Figure 7. The sub-title of the topic should be in bold blue text and hyper-linked to the publication main contents list.

Amendment information sheet

23 The Amendment Information Sheet (AIS) is the second page (ii) (applicable to AL1 onwards) of the preliminary pages of the publication and is to provide information to the user of the changes or amendments that have been made to the publication. The page is to contain the publication number and title, AL number, issue date, applicability and associated amendment details. The page is also to contain special instructions as necessary and is to identify the pages removed, replaced or inserted. Examples of AIS pages are shown at Figure 8 and Figure 9.

Amendment record

24 The amendment record shows the current AL state of the publication. Therefore, as the author incorporates each amendment, the amendment record is annotated with the details and incorporation date. Examples of amendment record pages are shown at Figure 10 and Figure 11.

Record of Advance Information Leaflets (AIL)

25 A non-web accessible PDF publication cannot be quickly amended or promulgated to disc media if the amendment is urgent and requires immediate issue. If, because of safety or airworthiness implications, it becomes imperative for an amendment to be broadcast quickly, it should be released as an AIL signal to the copy holders of the publication. The AIL signal can be kept in the disc media case until follow-up amendment action is completed. The subsequent AIS at the next amendment provides the details of the cancellation of the AIL signal, the amendment record is annotated with the amendment details and the Record of AIL Signals is updated to show the details of any deletion or cancellation references.

Contents pages and lists

26 All contents pages and lists within a publication are to contain, where practicable, links to the destination page image it refers to. The text of each entry that provides a link is to be coloured in dark blue to indicate the link function to the user. To allow easier link functions, it is best if each line entry is double spaced, where practicable.

Publication set-up of pages/sheets/cards

27 Direct conversion of existing publications to PDF will present the document exactly as it was when produced in hardcopy with right and left pages, gutters, mirror margins and back-to-back or tumble page orientation. However, if the TI sponsor has decided the publication will only be presented in PDF form, ie, no hardcopy versions will be produced, then the hardcopy orientation requirements should be removed before conversion to a PDF format. The general orientation and presentational rules are as follows:

27.1 The information presented on individual pages, sheets or cards are to be centred on the page with equal borders to top, bottom, left and right edges. Each page, sheet or card is to have its title; its other referencing information (Section, Chapter, page etc) and amendment details as applicable, shown on every page.

27.2 Document contents that are landscape orientated are to be presented in landscape view in PDF.

(1) HOW TO USE

(2)

1 These instructions are applicable to PC users only.

2 The DAPs on this disc contain links for navigating around the document with all links displayed in blue. The DAPs can also be navigated from bookmarks shown on the Bookmarks tab in the Navigation Pane.

3 The title page of each DAP contains a link from the sub-title to the publication's List of Contents (LOC). Links to return the reader to the title page or, to navigate throughout the DAP are available from the LOC.

4 The DAPs are printable but when printed, the hardcopy will become 'UNCONTROLLED COPY WHEN PRINTED'. Local management procedures must be applied to control the issue and use of any printed hardcopy.

5 Unless otherwise instructed, the previous version of this DAP is to be destroyed upon receipt of this superseding version.

DAP XXXX-XXXX-XXX

Version 1.0 Dated: Month Year

DAP XXXX-XXXX-XXX (3)
Version: 1.0 Dated: Month Year (1)

Ministry of Defence (5)

MAIN TITLE (6)

SUB-TITLE (3)

Sponsored for use in the
UK Military Air Environment
by
XXXX PTL (1)

Publication Organization:
XXXXXXXX

Service users should send their comments through
the channel prescribed for the purpose in:

►MAP-01 Chapter 8◄

Notes: (1) Arial 8pt Normal (3) Arial 12pt Bold (5) Arial 8pt Bold
(2) Arial 7pt Normal (4) Arial 10pt Bold (6) Arial 14pt Bold

Figure 1 Typical layout for a single topic disc media case label

(1) **Disc Contents**

DAP XXXX-XXXX-XXX to AL5 Dated April 2008

DAP XXXX-XXXX-XXX to AL3 Dated March 2007

DAP XXXX-XXXX-XXX to AL4 Dated November 2007

DAP XXXX-XXXX-XXX to AL5 Dated April 2008

DAP XXXX-XXXX-XXX to AL2 Dated February 2008

(2) HOW TO USE

(3)

1 These instructions are applicable to PC users only.

2 The DAPs on this disc contain links for navigating around the document with all links displayed in blue. The DAPs can also be navigated from bookmarks shown on the Bookmarks tab in the Navigation Pane.

3 The title page of each DAP contains a link from the sub-title to the publication's List of Contents (LOC). Links to return the reader to the title page or, to navigate throughout the DAP are available from the LOC.

4 The DAPs are printable but when printed, the hardcopy will become 'UNCONTROLLED COPY WHEN PRINTED'. Local management procedures must be applied to control the issue and use of any printed hardcopy.

5 Unless otherwise instructed, the previous version of this DAP is to be destroyed upon receipt of this superseding version.

DAP XXXX-XXXX-XXX

Version 1.0 Dated: Month Year

Version: 1.0 Dated: Month Year (2)

Ministry of Defence (5)

PLATFORM NAME (6)

MAINTENANCE SCHEDULES (7)

Sponsored for use in the
UK Military Air Environment
by
XXXX PTL (2)

Publication Organization:
XXXXXXXX

Service users should send their comments through the channel prescribed for the purpose in:

►MAP-01 Chapter 8◄

Notes: (1) Arial 10pt Bold (2) Arial 8pt Normal (3) Arial 7pt Normal (4) Arial 11pt Bold (5) Arial 8pt Bold (6) Arial 14pt Bold (7) Arial 12pt Bold

Figure 2 Typical layout for a multiple topic disc media case label

DAP Code No: Arial 10pt Bold
Version No: Arial 6pt Bold

MoD Badge - colour or black and white: Scaled to fit

MoD Title: Arial 14pt Bold

Information text both sides: Arial 8pt normal

Standard disc media symbol: Scaled to fit

Title: Arial 11pt Bold
Sub-title: Arial 11pt Bold

DAP Code No: Arial 10pt Bold
Version No: Arial 6pt Bold

Figure 3 Typical layout for a single topic disc media skin label

Figure 4 Typical layout for a multiple topic disc media skin label

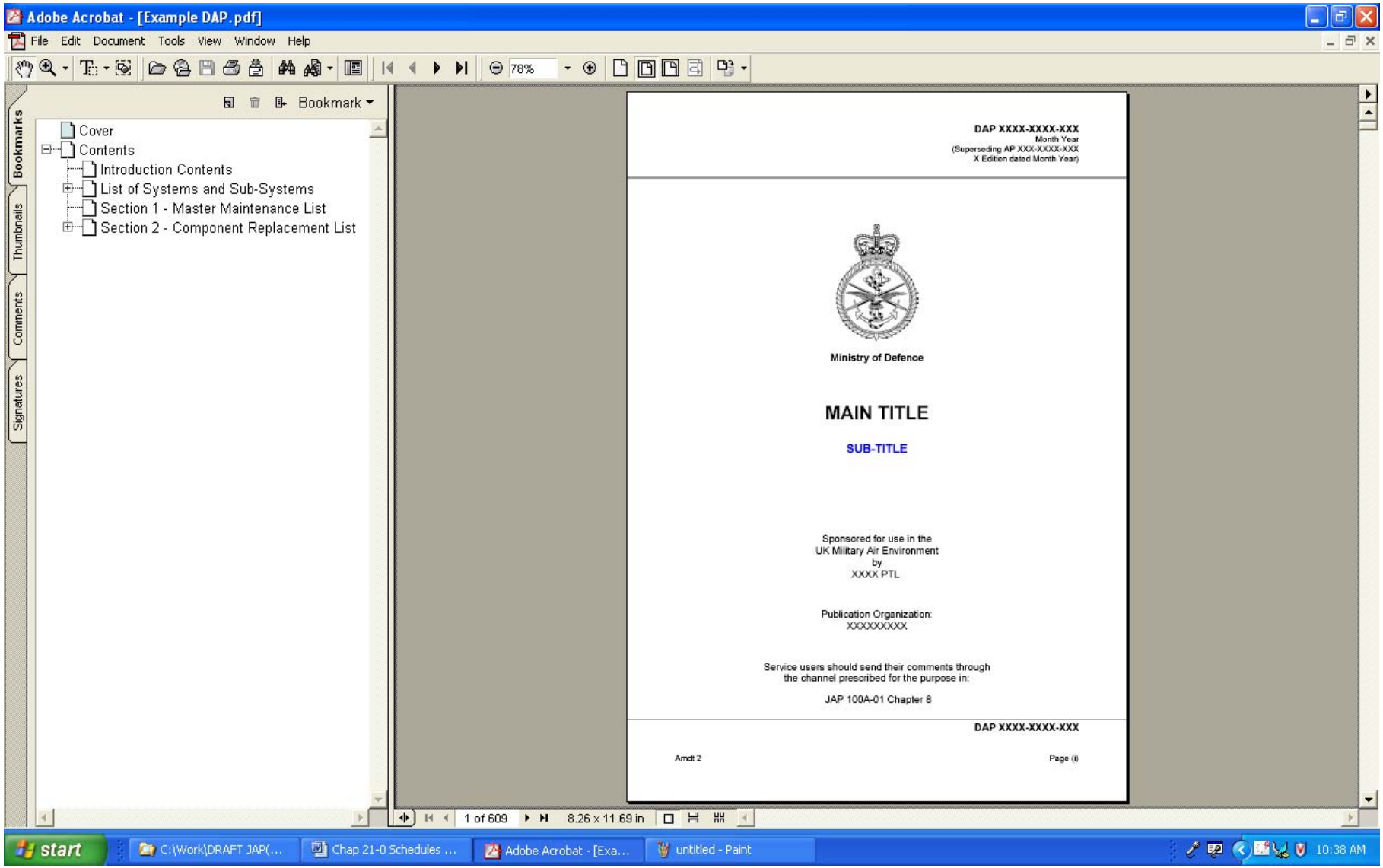

Figure 5 Example - PDF publication initial opening

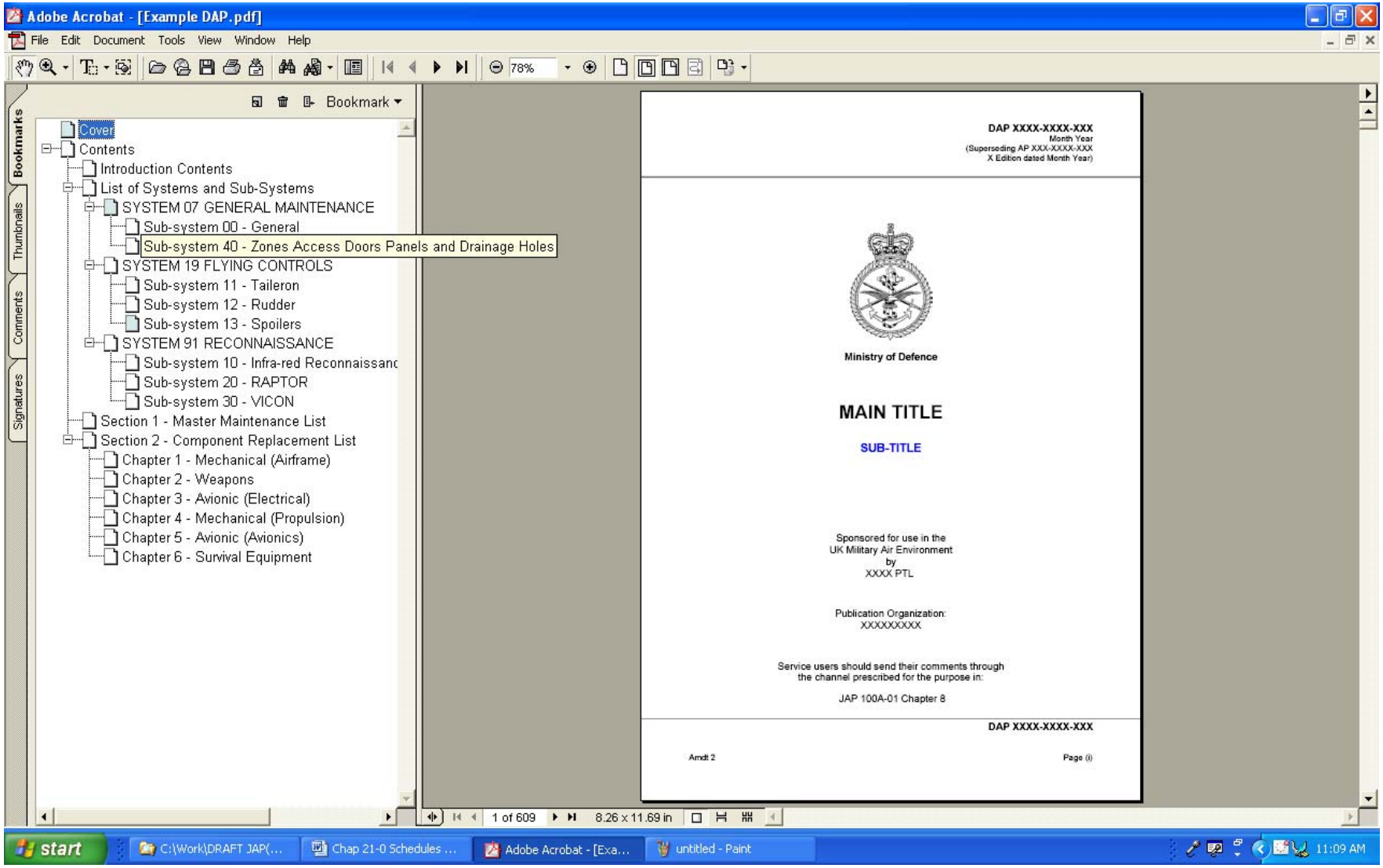

Figure 6 Example - PDF bookmark structure

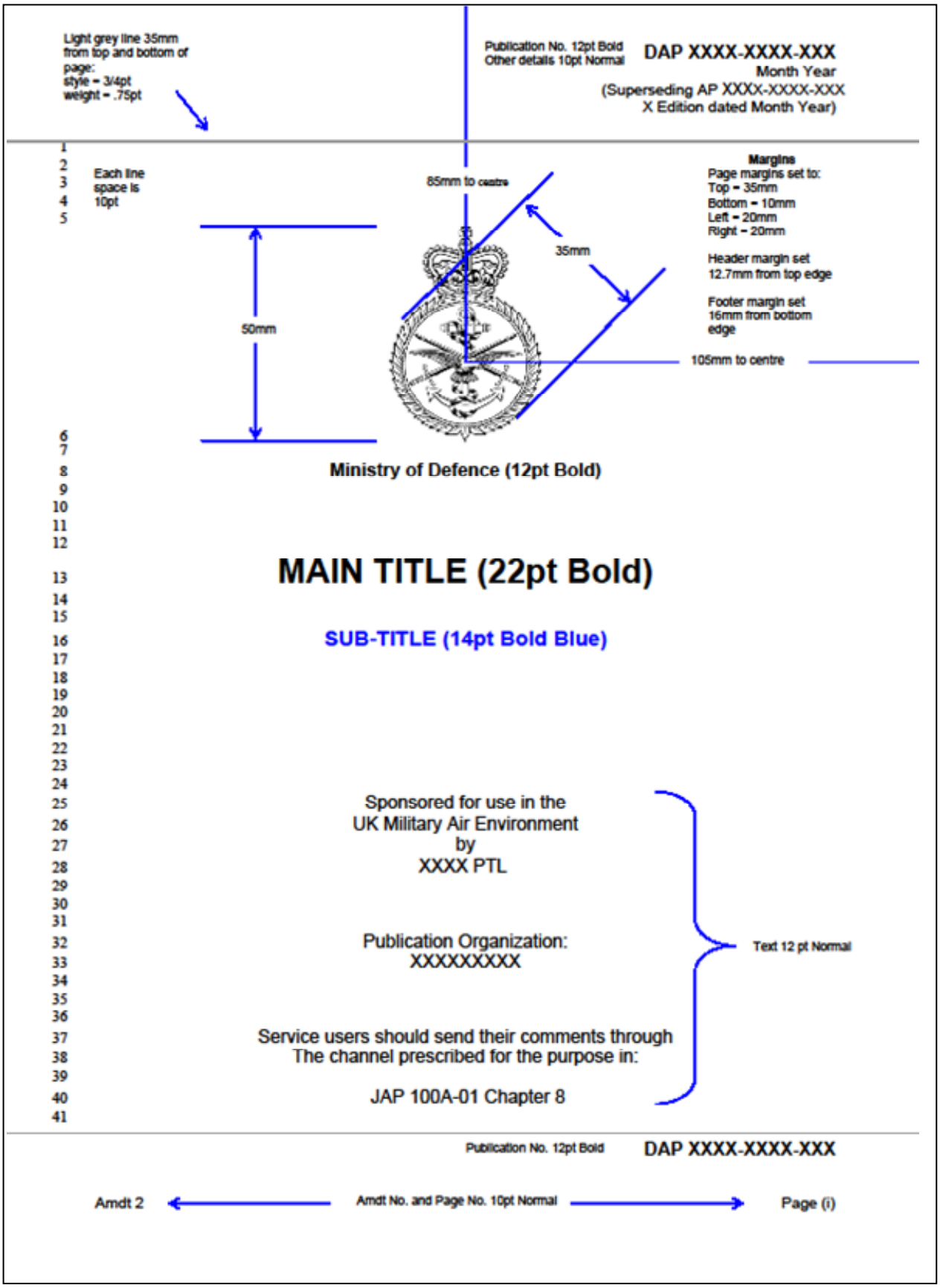

Figure 7 Example - PDF title page

AUTHORITY:
MINISTRY OF DEFENCE
MARCH 2009

AMENDMENT INSTRUCTION SHEET

Amendment No.20
to
DAP Code-5A1
2nd Edition November 2004

MAIN TITLE

NB1 Any existing Advance Information Leaflet (AIL) signals not cancelled by this amendment remain extant.

NB2 Any associated amendments are to be incorporated in the relevant topics in conjunction with this amendment.

This amendment affects the following topics:

5A2	5B1	5B1A	5B2	5B2A	5(CTY)	5U3	LITS
8	15	2	22	22	64	2	YES

MASTER MAINTENANCE SCHEDULE

HEADINGS	PAGES/SHEETS/CARDS REMOVED	PAGES/SHEETS/CARDS INSERTED
Preliminary pages	(v) and (vi)	(v) and (vi)
SECTION 1	1, 2, 13, 159 to 162 inclusive and 175 to 178 inclusive	1, 2, 13, 159 to 162 inclusive and 175 to 178 inclusive
SECTION 2		
Chapter 1	8 and 9	8 and 9
SECTION 3		
Chapter 3	7 and 8	7 and 8

This amendment cancels Advance Information Leaflet (AIL) signal No, 01/09

Page (ii)

Figure 8 Example - PDF Topic 5A1 amendment information sheet

AUTHORITY:
MINISTRY OF DEFENCE
MARCH 2009

AMENDMENT INSTRUCTION SHEET

Amendment No.20
to
DAP Code-5B2A
2nd Edition November 2004

MAIN TITLE

NB1 Any existing Advance Information Leaflet (AIL) signals not cancelled by this amendment remain extant.

NB2 Any associated amendments are to be incorporated in the relevant topics in conjunction with this amendment.

ASS0CIATED AMENDMENTS:

5A1
Amdt 31

FLEXIBLE PRIMARY MAINTENANCE SCHEDULE

HEADINGS	PAGES/SHEETS/CARDS REMOVED	PAGES/SHEETS/CARDS INSERTED
Preliminary pages	(ii), (iii) and (x)	(ii), (iii) and (x)
SECTION 1		
Chapter 4	A52	A52
SECTION 2		
Chapter 4	B51	B51
SECTION 3		
Chapter 4	C60	C60
SECTION 5		
Chapter 4	E52	E52
SECTION 6		
Chapter 4	F51	F51
SECTION 8		
Chapter 4	G55	G55

Page (ii)

Figure 9 Example - PDF other topics (5B2A) amendment information sheet

MASTER MAINTENANCE SCHEDULE
PLATFORM NAME

DAP Code-5A1
XX Edition

AMENDMENT RECORD

Amdt No.	Associated Topic Amendments											Date Amendment Incorporated
	5A2	5B1	5B2A	5B2&C	5(CTY)	5V						
1	Nil	1	1	1	Nil	Nil						Apr 07
2	Nil	Nil	Nil	2	Nil	Nil						Jun 07
3	Nil	2	2	3	Nil	Nil						Oct 07
4	1	3	3	4	1	Nil						Feb 08
5	2	4	Nil	5	Nil	Nil						Apr 08
6	Nil	Nil	4	6	Nil	Nil						Jul 08
7												
8												
9												
10												
11												
12												
13												
14												

Amdt 6 Page (iii)

Figure 10 Example - PDF Topic 5A1 amendment record

PRIMARY AND MINOR
PLATFORM NAME

DAP Code-XXX

AMENDMENT RECORD

Amdt No.	Date Amendment Incorporated	Amdt No.	Date Amendment Incorporated
1	Apr 07	13	
2	Oct 07	14	
3	Feb 08	15	
4	Jul 08	16	
5		17	
6		18	
7		19	
8		20	
9		21	
10		22	
11		23	
12		24	

Amdt 4 Page (iii)

Figure 11 Example - PDF other topics (5B2A) amendment record

CHAPTER 22-0

MAINTENANCE SCHEDULES PRODUCED IN AN INTERACTIVE ELECTRONIC TECHNICAL PUBLICATION

CONTENTS

Para

1 Introduction
2 Maintenance schedules production
4 Quality of maintenance schedules

INTRODUCTION

1 The information contained in this chapter is of a general nature and applies to new and legacy maintenance schedules that are produced as part of an Integrated Logistic Support programme and require presentation in an electronic format for use in Interactive Electronic Technical Publications (IETP). These publications may also be referred to as Interactive Electronic Technical Manuals (IETM). This chapter concerns those maintenance schedules that are produced as electronic data modules, which are constructed from data elements stored in a Common Source Data Base (CSDB). It is not intended that this chapter should provide instruction on how to create electronic maintenance schedules, but rather to highlight the need for assuring the integrity of an RCM derived maintenance programme when it is presented in an IETP format.

MAINTENANCE SCHEDULES PRODUCTION

2 The data modules required to create a maintenance schedule electronically within an ILS project are specified at the beginning of the project in the Data Module Requirements List (DMRL). It is important that these data modules accurately represent the information required to produce the various elements of a maintenance schedule; eg, item identification, item location, item description, task description, task frequency, trade applicability, etc.

3 The data modules go through a process that generates the linking of files in the software output to produce the required maintenance schedules information in a predefined layout.

QUALITY OF MAINTENANCE SCHEDULES

4 ASD Specification S1000D is the standard used to produce electronic technical publications in accordance with current DE&S policy. However, the specification does not define the elements of source data contained within the CSDB; nor does it define the construct of maintenance schedules that are produced as part of an IETP. It is therefore essential that organizations responsible for creating maintenance schedules within an IETP have in place procedures or work instructions to make sure that the engineering integrity of maintenance schedules is not compromised. Such procedures or work instructions must provide assurance of the following:

4.1 That preventive maintenance task details, derived as a result of RCM analysis, can be completely and accurately recorded as data elements within the relevant CSDB.

4.2 That the preventive maintenance, detailed as the output in an IETP, is as prescribed in the associated RCM derived list of maintenance tasks (the input to the CSDB).

4.3 That the preventive maintenance detailed in an IETP is presented in a manner that reflects the project specific layout requirements and agreed with the Customer Project Team.